AUDI
Q7

Q7 (4L) 03/2006 - 08/2015

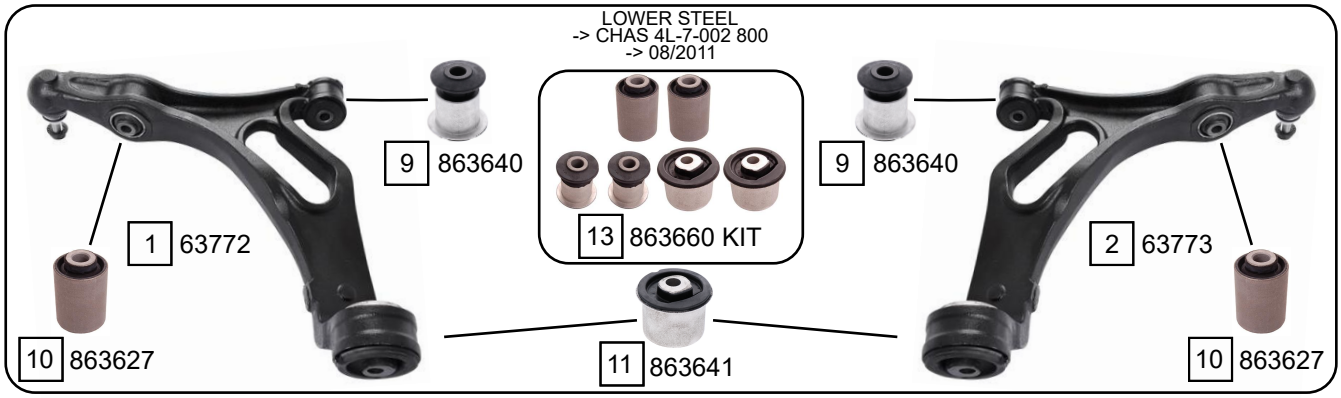

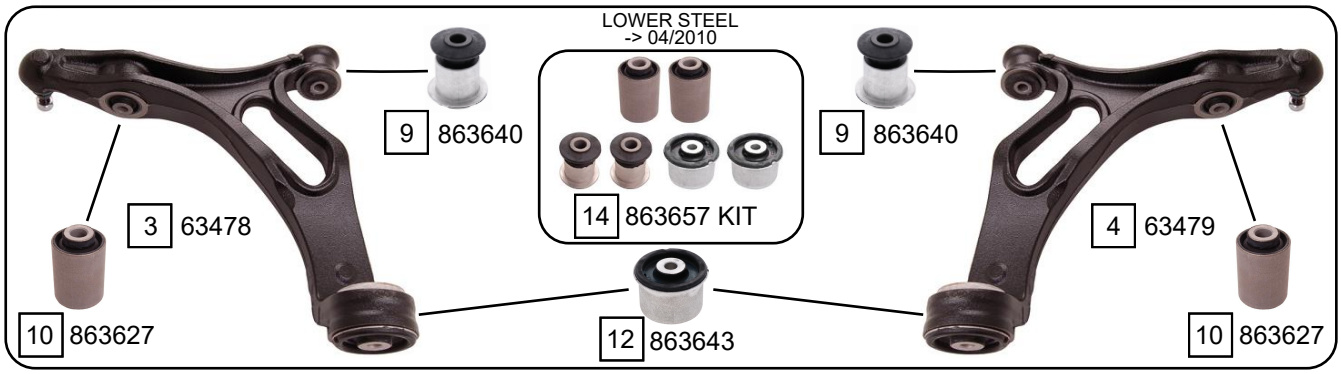

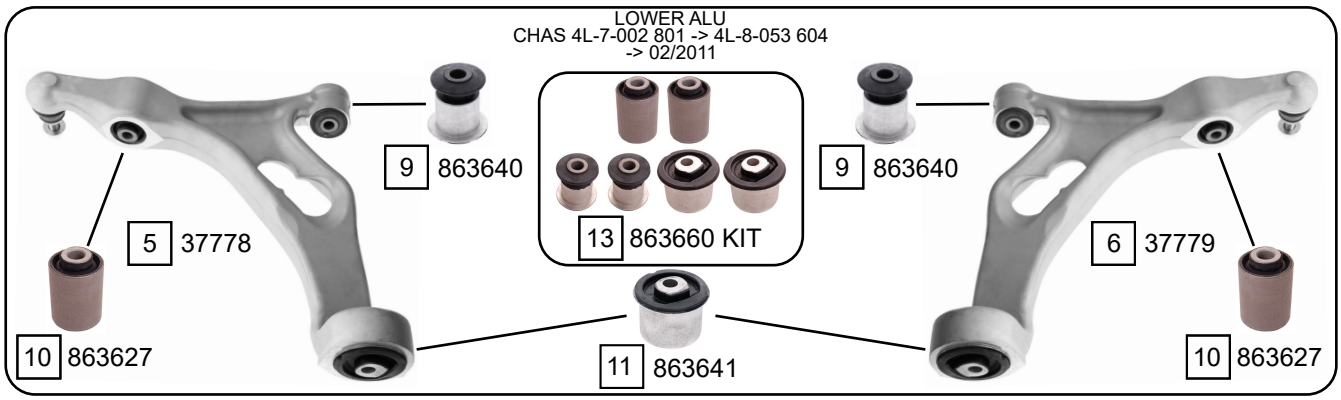

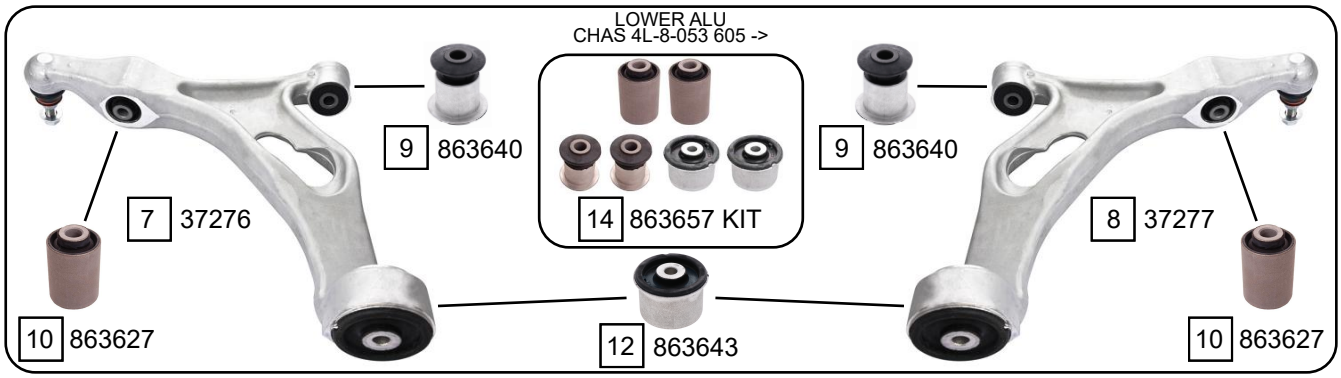

Ref.	Sidem Ref.	Description	OE-number	Measures	Ref.	Sidem Ref.	Description	OE-number	Measures
1	63772	TCA left wbj	7L8 407 151 B	c:20.6	8	37277	TCA right wbj	7P0 407 152 E	c:20.9
2	63773	TCA right wbj	7L8 407 152 B	c:20.6	9	863640	silentblock for TCA	7L0 407 183 A	di:14.3 do:40
3	63478	TCA left wbj	7L0 407 151 K	c:20.6	10	863627	silentblock for TCA	7L0 412 333 A	di:14.2 do:48
4	63479	TCA right wbj	7L0 407 152 K	c:20.6	11	863641	silentblock for TCA	7L0 407 182 E	di:14.3 do:60.3
5	37778	TCA left wbj	7L8 407 151 E	c:20.9	12	863643	silentblock for TCA	7L0 407 182 G	di:14.3 do:72.2
6	37779	TCA right wbj	7L8 407 152 E	c:20.9	13	863660 KIT	silentblock kit	7L0 407 182 E S2	
7	37276	TCA left wbj	7P0 407 151 E	c:20.9	14	863657 KIT	silentblock kit	7L0 407 182 G S1	

Copyright 2024