7-SERIE (E65, E66) 11/2001 - 09/2008

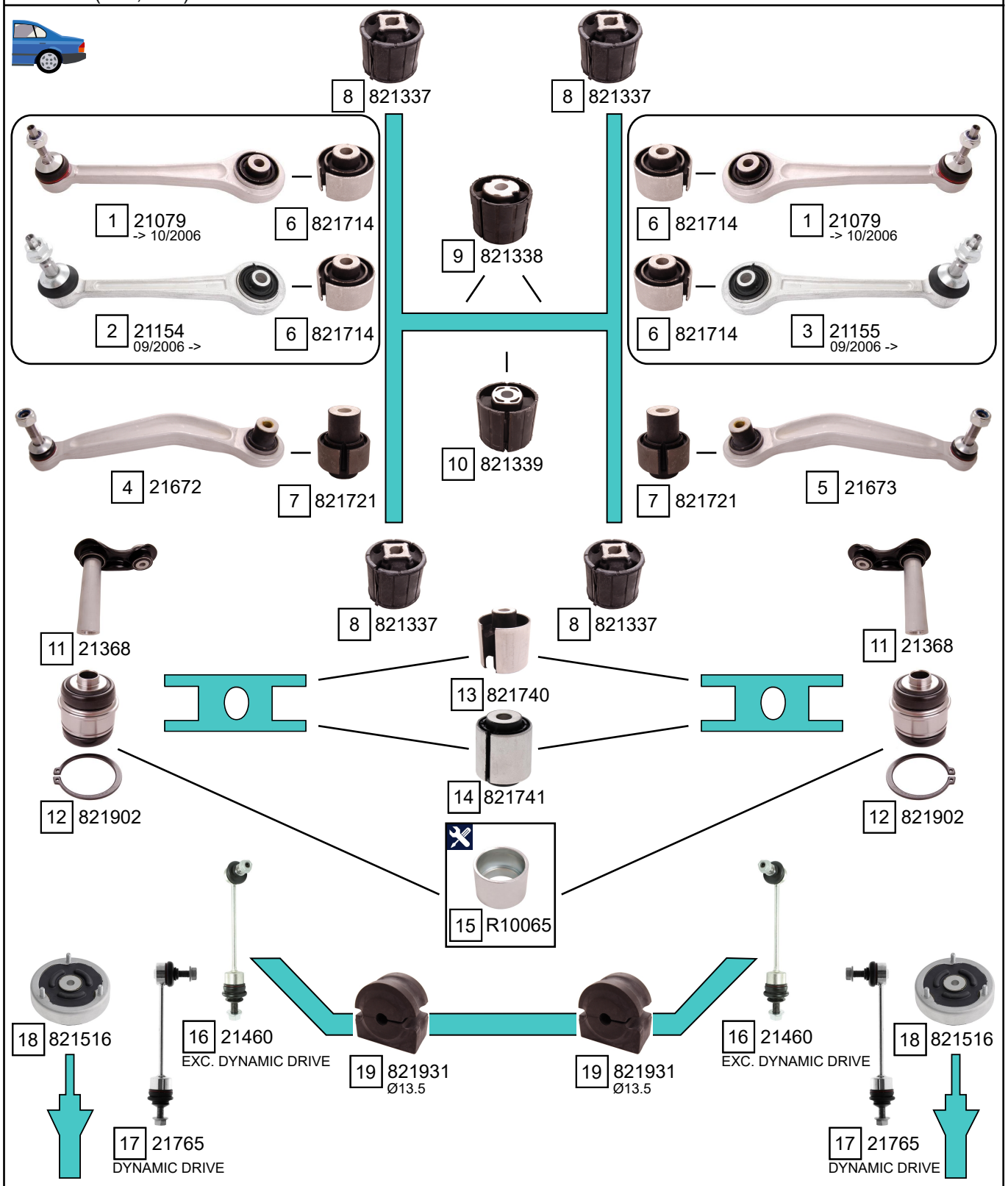

Ref.	Sidem Ref.	Description	OE-number	Measures	Ref.	Sidem Ref.	Description	OE-number	Measures
1	21079	TCA wbj	33 32 6 777 424	c:10	11	21368	track rod	33 32 6 770 749	L:94
2	21154	TCA left wbj	33 32 6 775 083	c:13.7	12	821902	ball joint rear	33 32 6 767 748	di:16.3 do:52
3	21155	TCA right wbj	33 32 6 775 084	c:13.7	13	821740	silentblock for TCA	Part of	di:12 do:56.5
4	21672	TCA left wbj	33 30 6 772 241	c:14	14	821741	silentblock for TCA	Part of	di:14 do:52
5	21673	TCA right wbj	33 30 6 772 242	c:14	15	R10065	mounting tool ring ø60 ø52	TOOL	di:52 do:60
6	821714	silentblock for TCA	Part of	di:10.2 do:44.1	16	21460	stabiliser link rear axle	33 50 6 781 538	L:212
7	821721	silentblock for TCA	Part of	di:12.1 do:47	17	21765	stabiliser link	33 50 6 781 539	L:212
8	821337	mounting axle body	33 31 6 770 750	di:19 do:96	18	821516	strut mount	33 52 6 779 611	di:12.2 do:124
9	821338	mounting axle body	33 17 6 770 764	di:12.1 do:54	19	821931	stabiliser mounting	33 55 6 757 333	di:12.5
10	821339	mounting axle body	33 17 6 770 763	di:14.2 do:71.6					

Copyright 2024