TRANSIT V (FY)
TRANSIT VI (TT9)

06/2000 - 12/2006
04/2006 - 08/2016

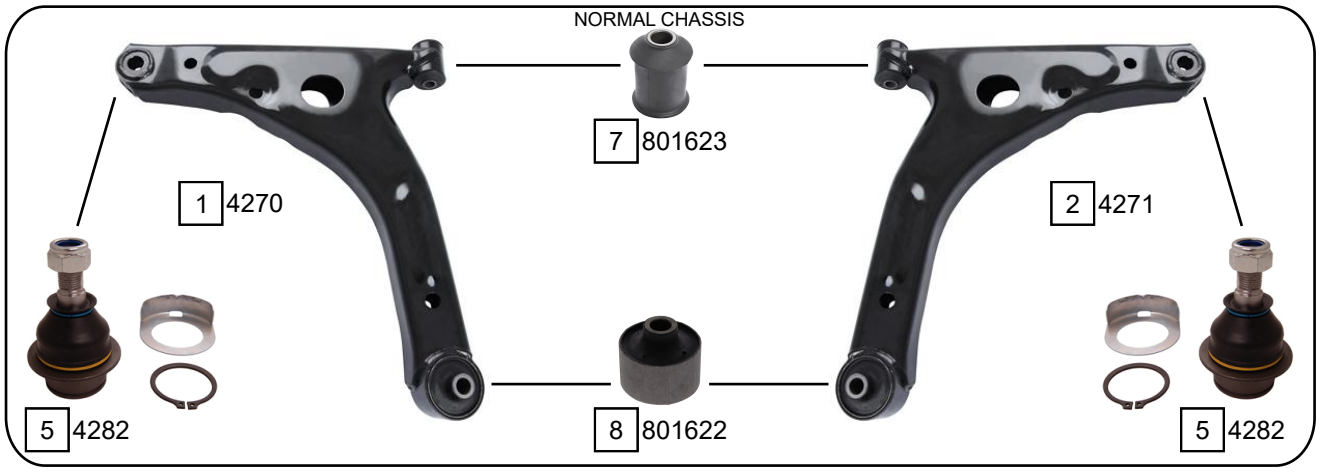

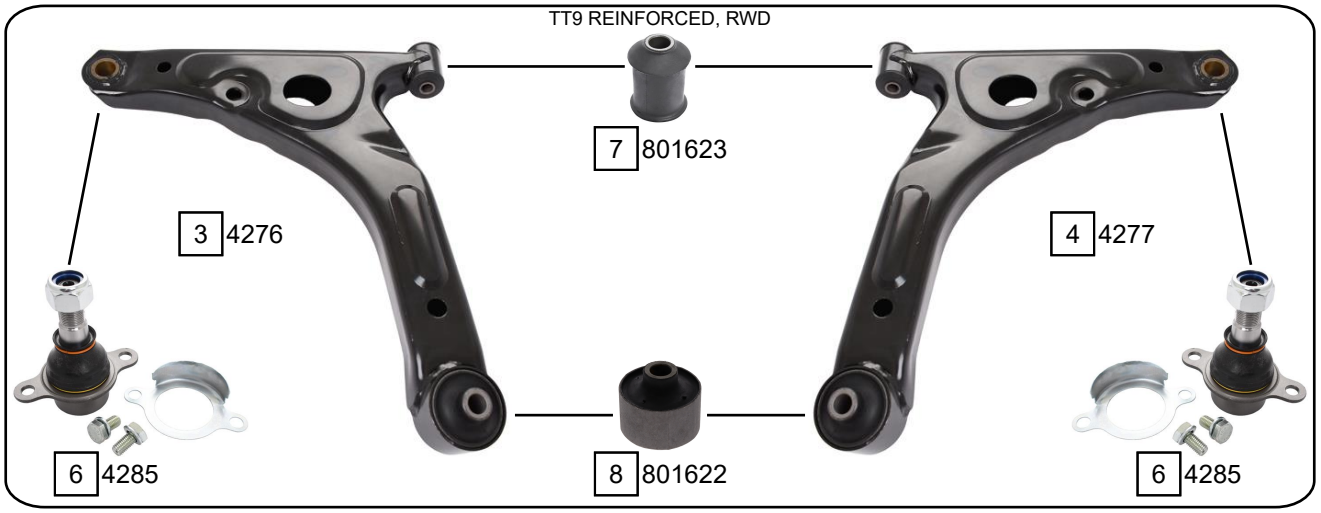

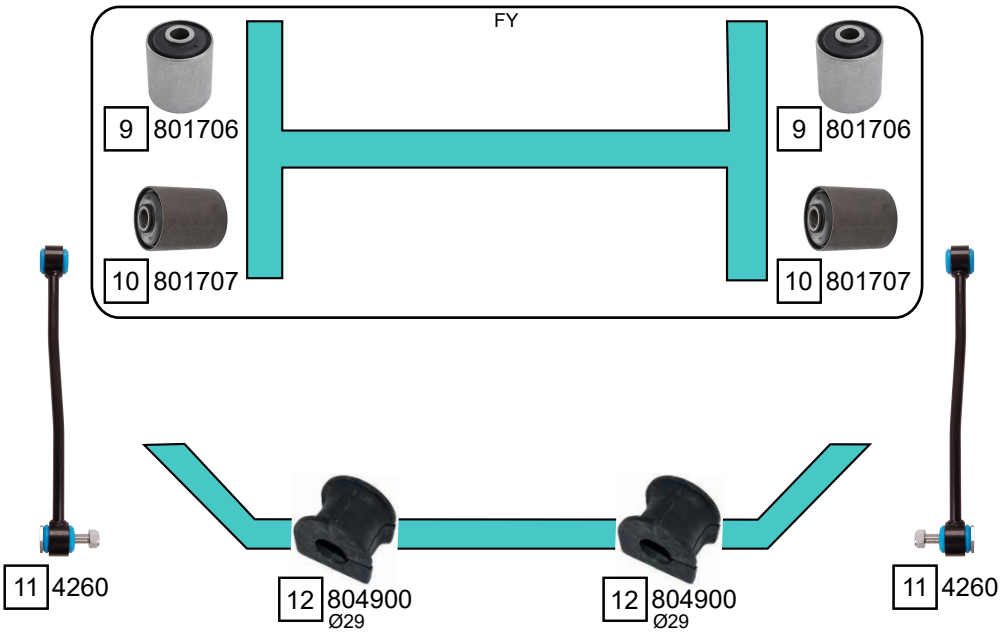

Ref.	Sidem Ref.	Description	OE-number	Measures	Ref.	Sidem Ref.	Description	OE-number	Measures
1	4270	TCA left wobj	1 735 890	c:16.3	7	801623	silentblock for TCA	1 495 713	di:14.2 do:37.3
2	4271	TCA right wobj	1 735 889	c:16.3	8	801622	silentblock for TCA	1 495 717	di:16.7 do:65.7
3	4276	TCA left wobj	1 553 250	c:20.9	9	801706	spring bush	4 055 743	di:16.1 do:57
4	4277	TCA right wobj	1 553 239	c:20.9	10	801707	spring bush	4 041 521	di:14.3 do:50
5	4282	ball joint	1 817 752	c:18.2 do:44.5	11	4260	stabiliser link rear axle	4 709 303	L:349
6	4285	ball joint	2 207 775	c:21.7	12	804900	stabiliser mounting	4 041 490	di:29

Copyright 2024