SL (R230) 10/2001 - 01/2012

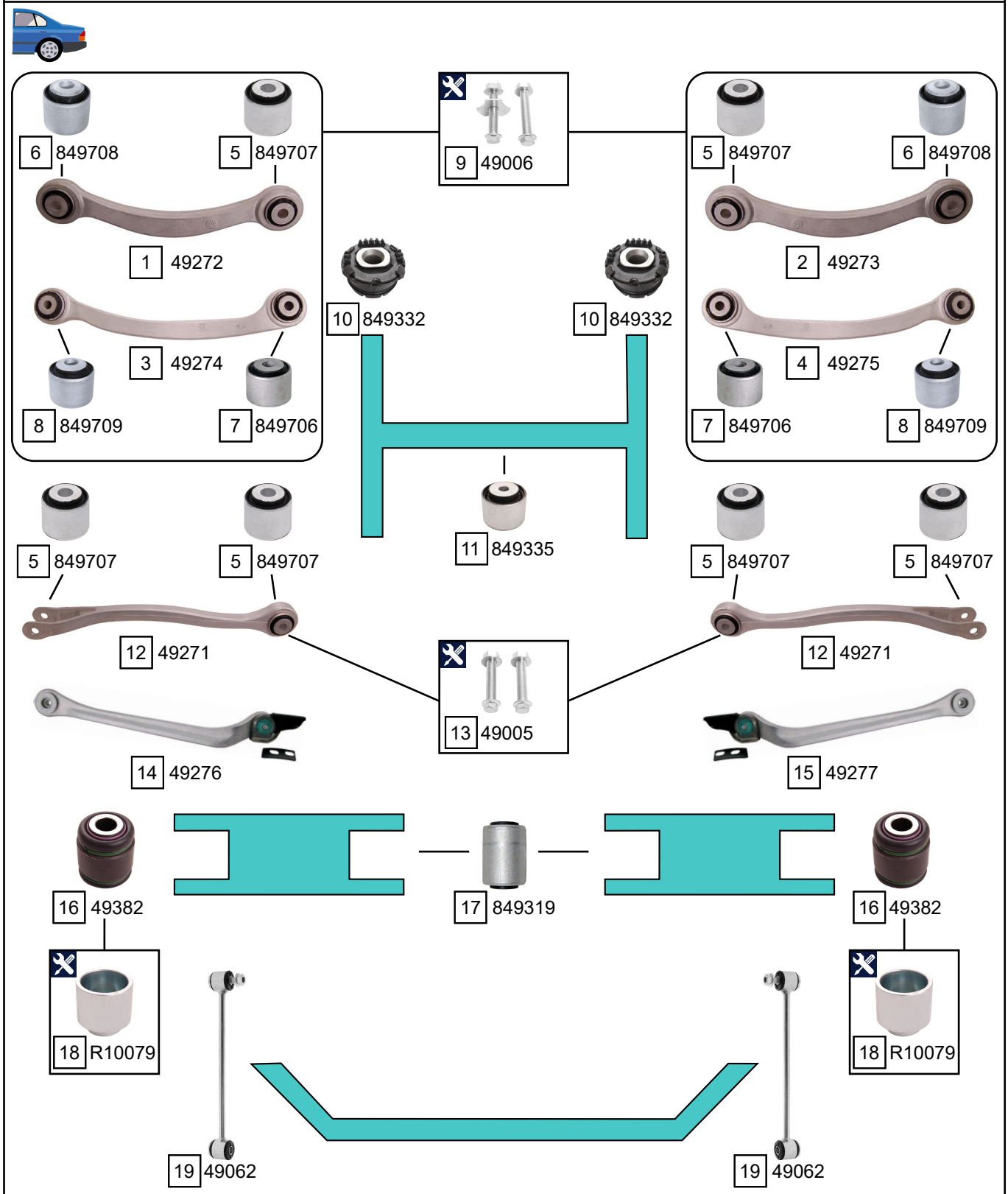

Ref.	Sidem Ref.	Description	OE-number	Measures	Ref.	Sidem Ref.	Description	OE-number	Measures
1	49272	TCA	230 350 35 06	L:262	11	849335	mounting axle body	211 351 11 42	di:14.2 do:66.1
2	49273	TCA	230 350 36 06	L:262	12	49271	TCA	230 350 20 06	L:367
3	49274	TCA	230 350 27 06	L:324	13	49005	mounting kit	211 990 00 99	
4	49275	TCA	230 350 28 06	L:324	14	49276	TCA	230 350 03 29	L:439
5	849707	silentblock for TCA	230 352 15 65	di:12.1 do:38.5	15	49277	TCA	230 350 04 29	L:439
6	849708	silentblock for TCA	Part of	di:12.2 do:38.5	16	49382	ball joint rear	204 352 00 27	di:14.2 do:40
7	849706	silentblock for TCA	211 352 08 65	di:12.1 do:41.5	17	849319	silentblock for TCA	222 352 08 65	di:12.2 do:51.4
8	849709	silentblock for TCA	Part of	di:12.2 do:41.5	18	R10079	mounting tool ring ø46 ø38	TOOL	di:38 do:46
9	49006	mounting kit	211 990 02 99		19	49062	stabiliser link rear axle	211 320 33 89	L:260
10	849332	mounting axle body	211 351 14 42	di:17.3 do:77					

Copyright 2024