OPEL
INSIGNIA

SIDEM
Experts know why

INSIGNIA B (Z18) GRANDSPORT	03/2017 - 12/2022
INSIGNIA B SPORTS TOURER (Z18)	03/2017 - 12/2022
INSIGNIA B COUNTRY TOURER (Z18)	06/2017 - 12/2022

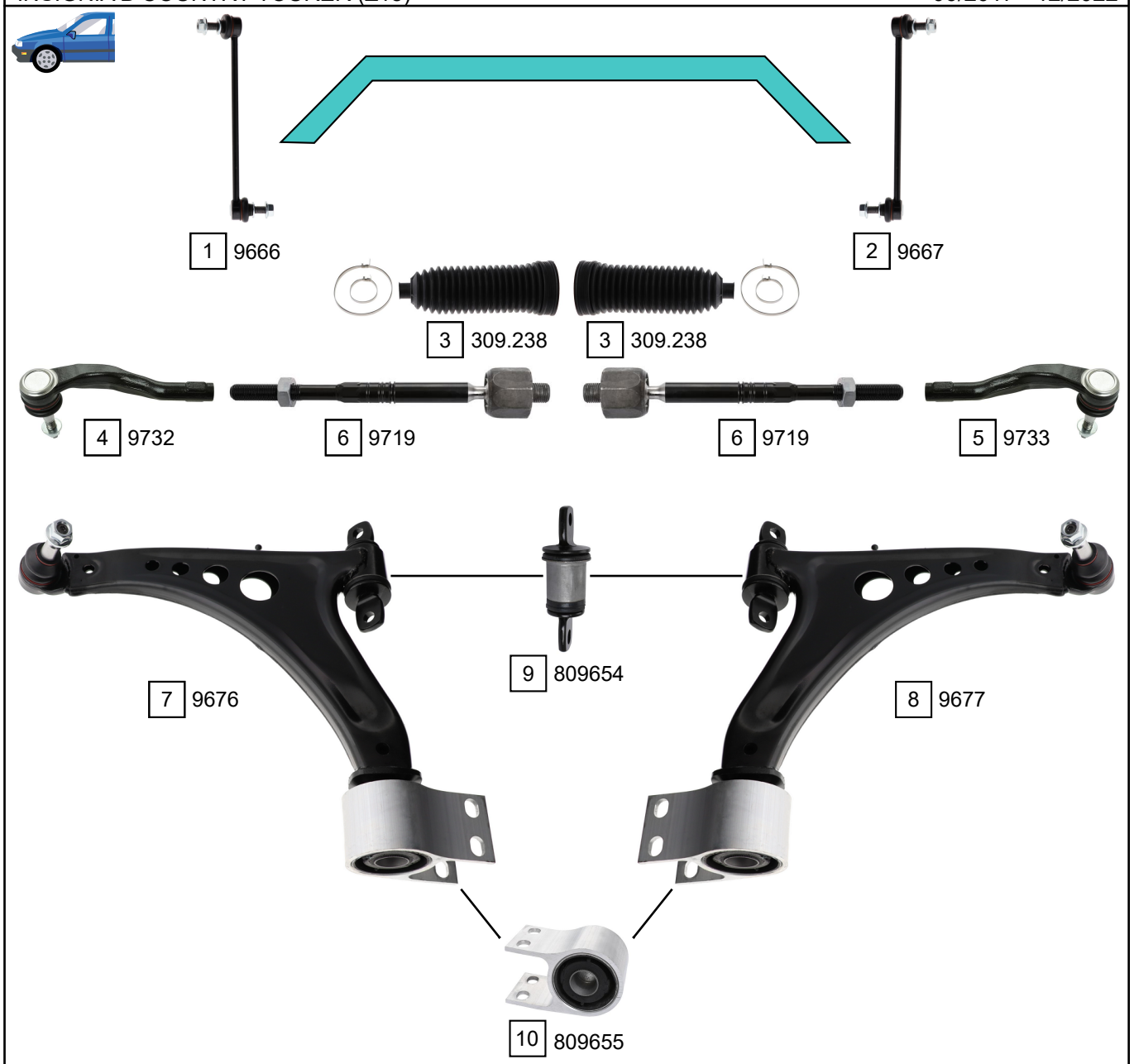

Ref.	Sidem Ref.	Description	OE-number	Measures	Ref.	Sidem Ref.	Description	OE-number	Measures
1	9666	stabiliser link left	84 077 102	L:275	7	9676	TCA left wbj	84 198 832	c:16.2
2	9667	stabiliser link right	84 077 103	L:275	8	9677	TCA right wbj	84 198 833	c:16.2
3	309.238	steering rack gaiter	23 449 527	D:62 d:16 L:201	9	809654	silentblock for TCA	Part of	do:40
4	9732	tie rod end left	23 449 522	c:13.3 th:FM14X1.5R	10	809655	silentblock for TCA	Part of	di:22.4 do:65
5	9733	tie rod end right	23 449 523	c:13.3 th:FM14X1.5R	11	9668	stabiliser link	23 384 634	L:100
6	9719	axial joint	23 449 526	th:MM16X1.5R L:243	12	9669	stabiliser link	84 012 690	L:150

Copyright 2024