# TESLA
## MODEL 3

MODEL 3 (5YJ3) 06/2017 ->

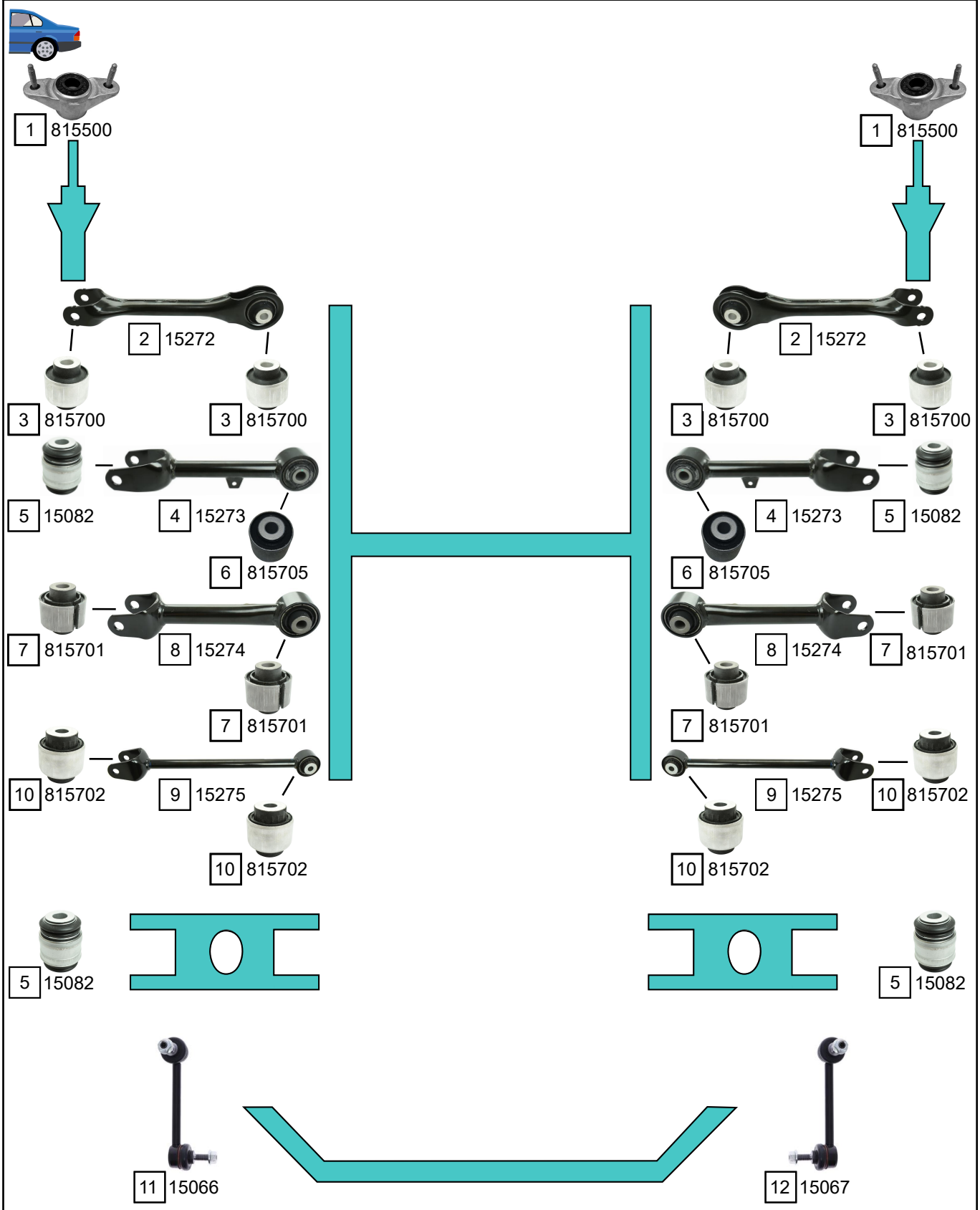


| Ref. | Sidem Ref. | Description | OE-number | Measures | Ref. | Sidem Ref. | Description | OE-number | Measures |
|---|---|---|---|---|---|---|---|---|---|
| 1 | 815500 | strut mount | Part of | di:11 L:54 | 7 | 815701 | silentblock for TCA | Part of | di:12.2 do:45 |
| 2 | 15272 | track rod | 1044427 00 C | L:275 | 8 | 15274 | track rod | 1044431 00 G | L:219 |
| 3 | 815700 | silentblock for TCA | Part of | di:12.2 do:43.9 | 9 | 15275 | track rod | 1044444 00 A | L:400 |
| 4 | 15273 | track rod | 1044423 00 G | L:255 | 10 | 815702 | silentblock for TCA | Part of | di:12.2 do:44 |
| 5 | 15082 | ball joint | Part of | di:14.2 do:47 | 11 | 15066 | stabiliser link left | 1044491 00 E | L:144 |
| 6 | 815705 | silentblock for TCA | Part of | di:14.2 do:47 | 12 | 15067 | stabiliser link right | 1044496 00 E | L:144 |


Copyright 2024