MODEL Y (5YJY) 03/2019 ->

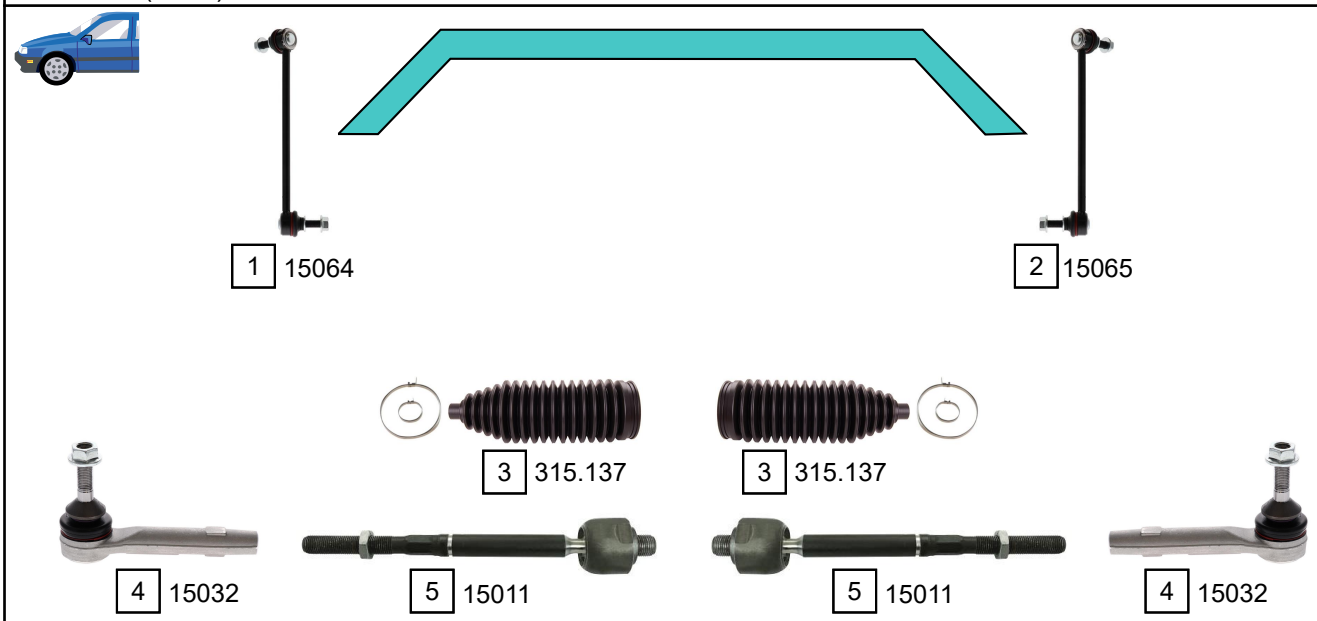

UPPER

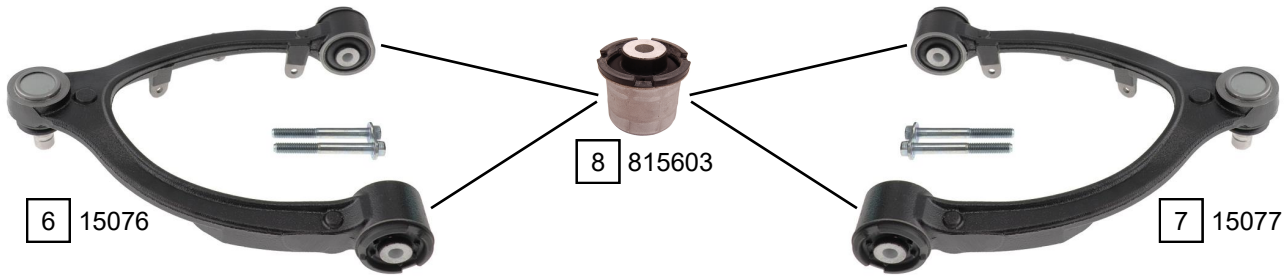

LOWER

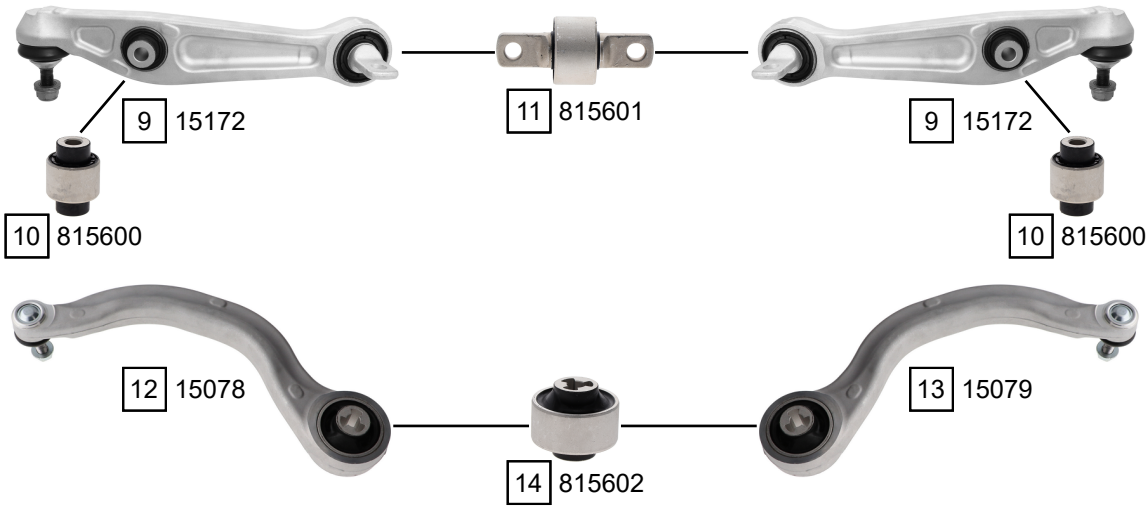

Ref.	Sidem Ref.	Description	OE-number	Measures	Ref.	Sidem Ref.	Description	OE-number	Measures
1	15064	stabiliser link left	1044391 00 D	L:280	8	815603	silentblock for TCA	Part of	di:10.2 do:45
2	15065	stabiliser link right	1044396 00 D	L:280	9	15172	TCA wbj	1188341 00 C	c:13.7 L:336
3	315.137	steering rack gaiter	Part of	D:55 d:14 L:195	10	815600	silentblock for TCA	Part of	di:14.2 do:46.7
4	15032	tie rod end	Part of	c:13.9 th:FM14X1.5R	11	815601	silentblock for TCA	Part of	di:14.3 do:60
5	15011	axial joint	Part of	th:MM16X1.5R L:247	12	15078	TCA left wbj	1044354 00 A	c:16.6 L:380
6	15076	TCA left wbj	1288321 00 A	c:18.1	13	15079	TCA right wbj	1044359 00 A	c:16.6 L:380
7	15077	TCA right wbj	1288326 00 A	c:18	14	815602	silentblock for TCA	Part of	di:14.3 do:70

Copyright 2024