VOLKSWAGEN
JETTA

JETTA II (19E, 1G2) 01/1984 - 02/1992

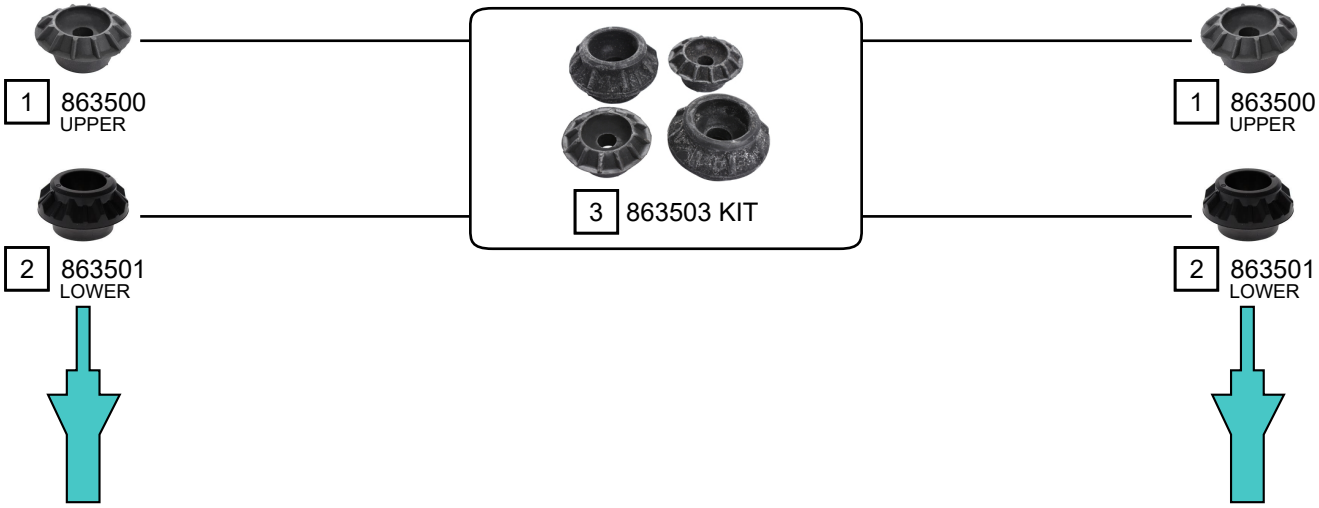

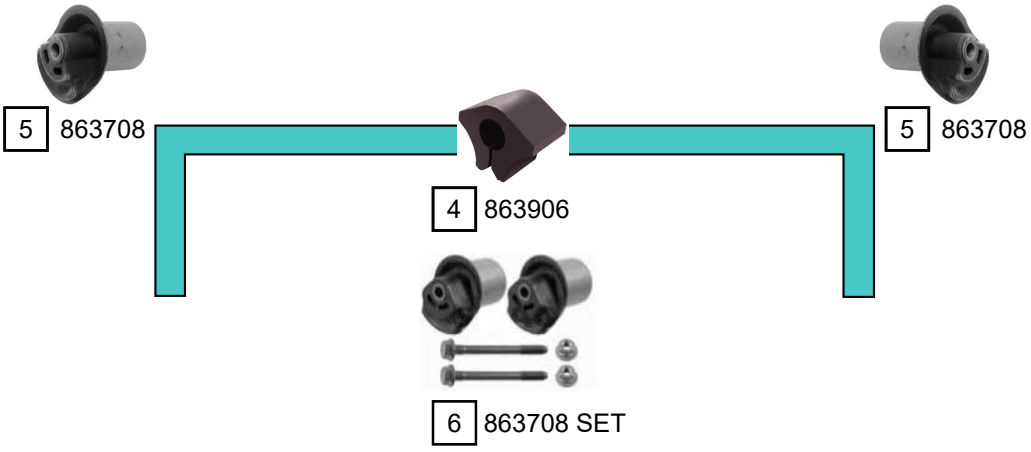

Ref.	Sidem Ref.	Description	OE-number	Measures	Ref.	Sidem Ref.	Description	OE-number	Measures
1	863500	strut mount	191 512 335	di:13.5 do:59 L:27.5	4	863906	stabiliser mounting	871 511 423	di:16.5
2	863501	strut mount	191 512 333	di:17.5 do:70 L:40	5	863708	mounting axle body	191 501 541	di:12.2 do:44.4
3	863503 KIT	strut mount kit	191 512 335 S1	di:13	6	863708 SET	mounting axle body set	191 501 541 S1	di:12.2 do:44.4

Copyright 2024