CORRADO (53I) 08/1989 - 12/1995

EXC. 2.9 VR6

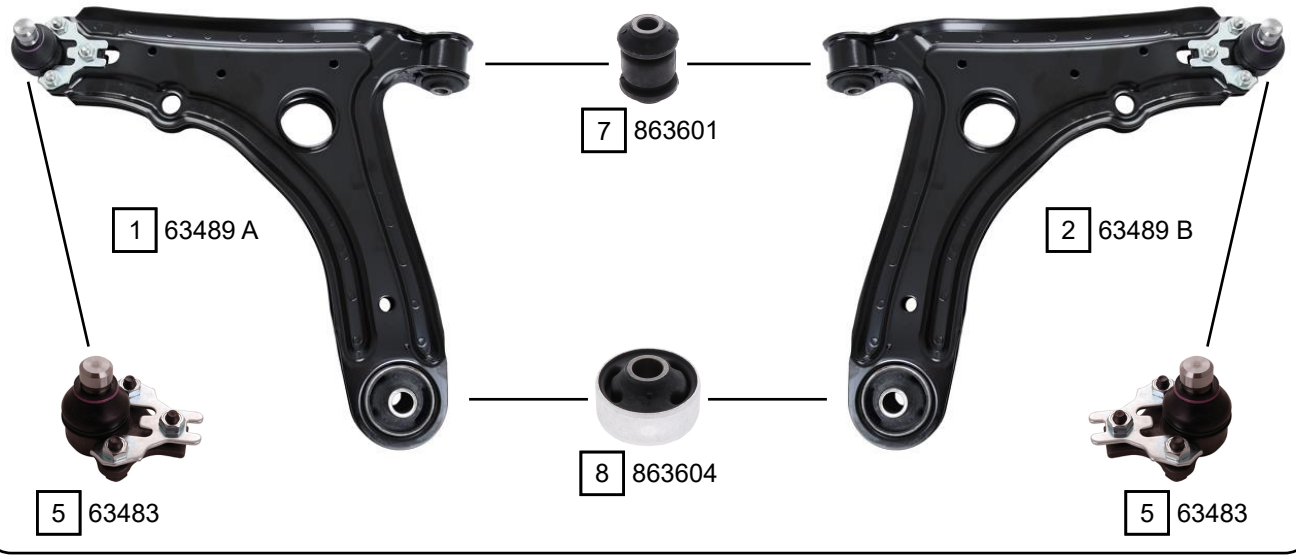

2.9 VR6

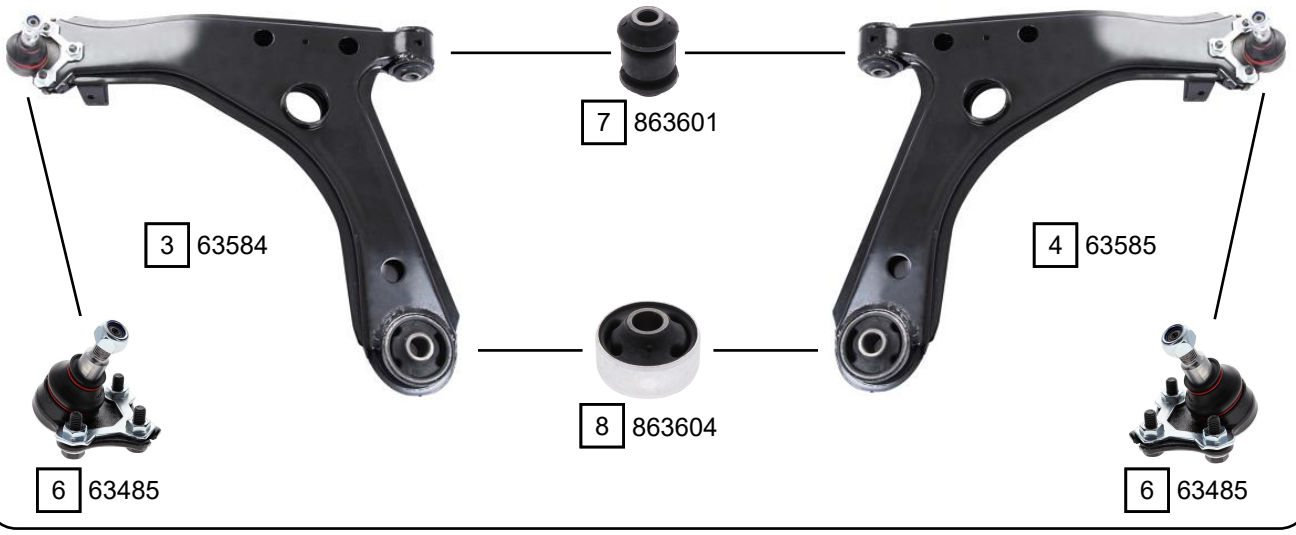

Ref.	Sidem Ref.	Description	OE-number	Measures	Ref.	Sidem Ref.	Description	OE-number	Measures
1	63489 A	TCA left wbj	191 407 151 B S1	c:19	5	63483	ball joint lower	357 407 365 A	c:19
2	63489 B	TCA right wbj	191 407 151 B S2	c:19	6	63485	ball joint lower	1H0 407 365	c:16.5
3	63584	TCA left wbj	1H0 407 151 A S1	c:16.5	7	863601	silentblock for TCA	357 407 182	di:12.1 do:33
4	63585	TCA right wbj	1H0 407 152 S1	c:16.5	8	863604	silentblock for TCA	191 407 181 D	di:17 do:60.1

Copyright 2024