CITROEN
AX

AX 07/1986 - 12/1998

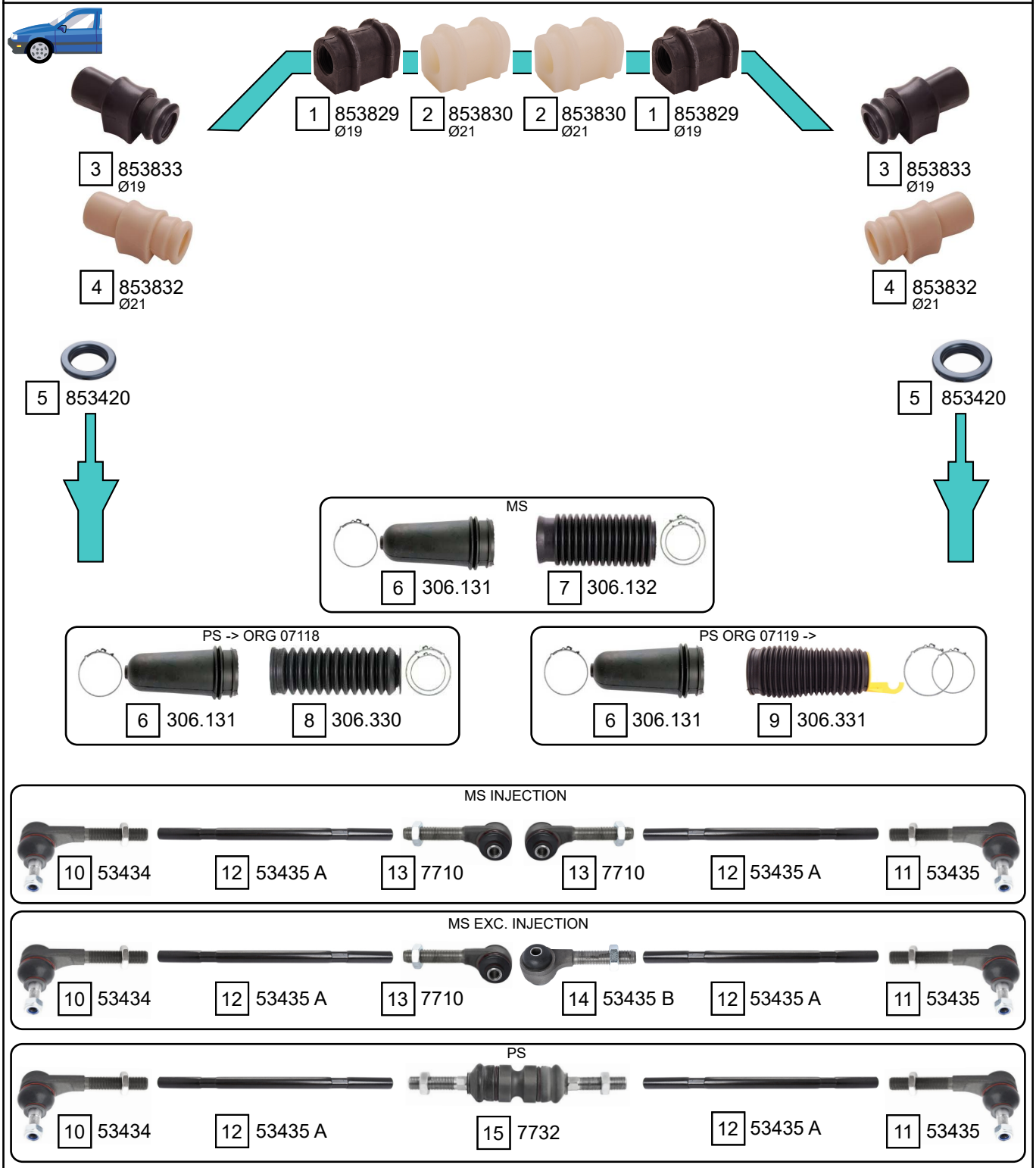

Ref.	Sidem Ref.	Description	OE-number	Measures	Ref.	Sidem Ref.	Description	OE-number	Measures
1	853829	stabiliser mounting	5094 56	di:18.4	9	306.331	steering rack gaiter	4066 50	D:45 d:22 L:120
2	853830	stabiliser mounting	5094 57	di:20.3	10	53434	tie rod end	3817 41	c:12.1 th:MM14x1.5R
3	853833	stabiliser mounting	5094 59	di:19.5	11	53435	tie rod end	3817 42	c:12.1 th:MM14x1.5R
4	853832	stabiliser mounting	5094 60	di:20.5	12	53435 A	connecting piece	3812 A0	L:381
5	853420	bearing	5035 27	di:65 do:99.5 L:20	13	7710	axial joint	3817 33	L:90
6	306.131	steering rack gaiter	4066 32	D:40 d:12 L:106	14	53435 B	axial joint	3817 32	L:90
7	306.132	steering rack gaiter	4066 34	D:38 d:20 L:134	15	7732	axial joint	3817 47	th:MM14X1.5L L:214
8	306.330	steering rack gaiter	4066 36	D:42 L:132					

Copyright 2021

AX 07/1986 - 12/1998

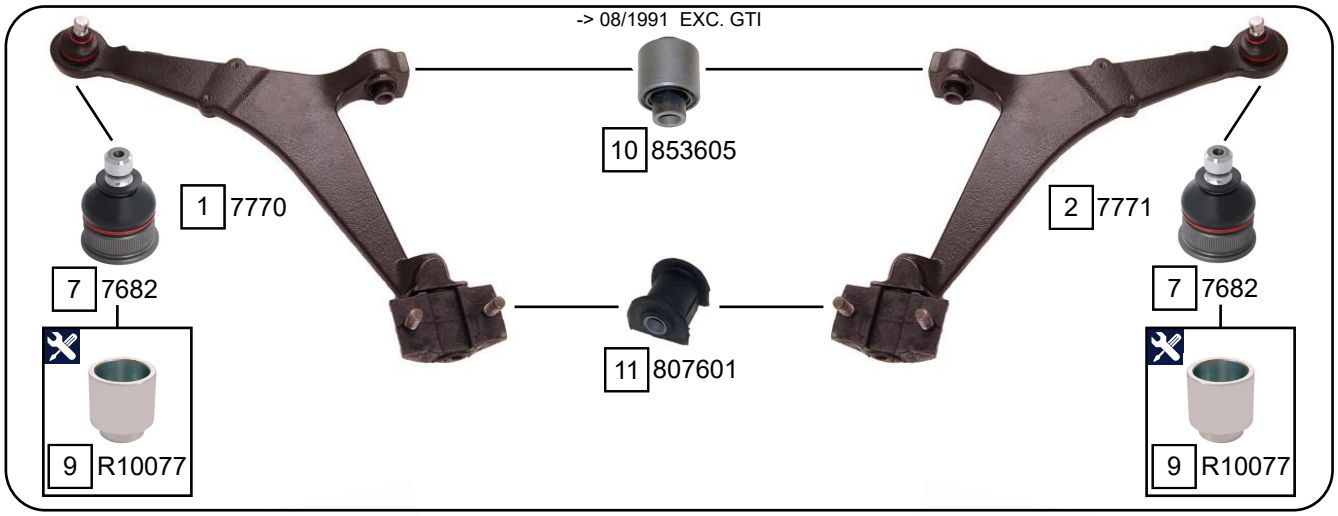

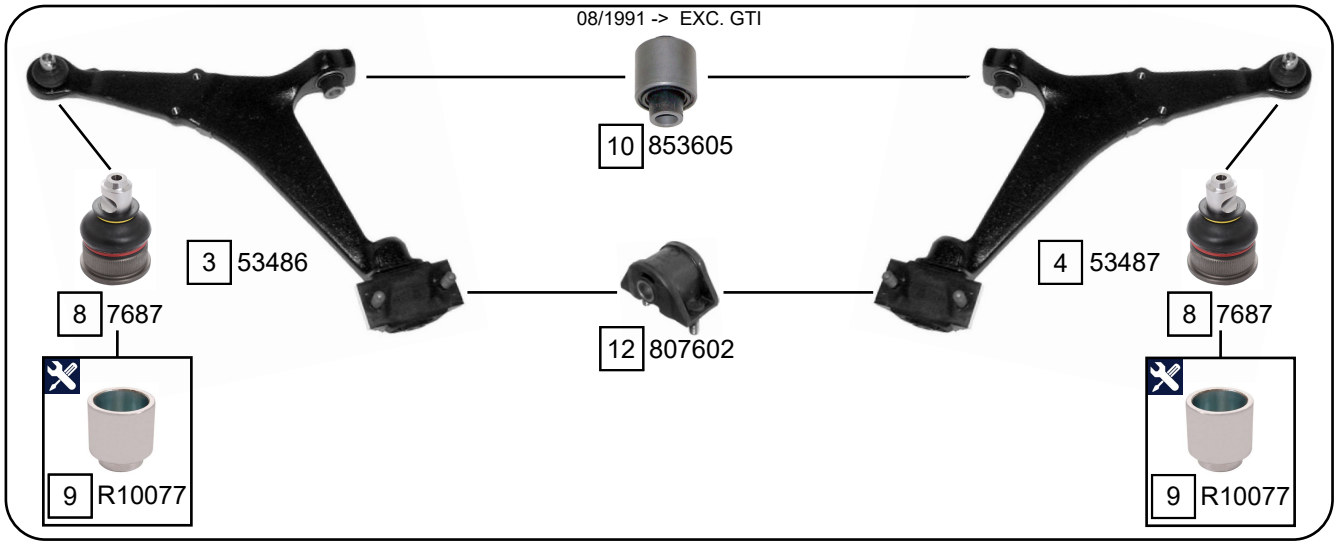

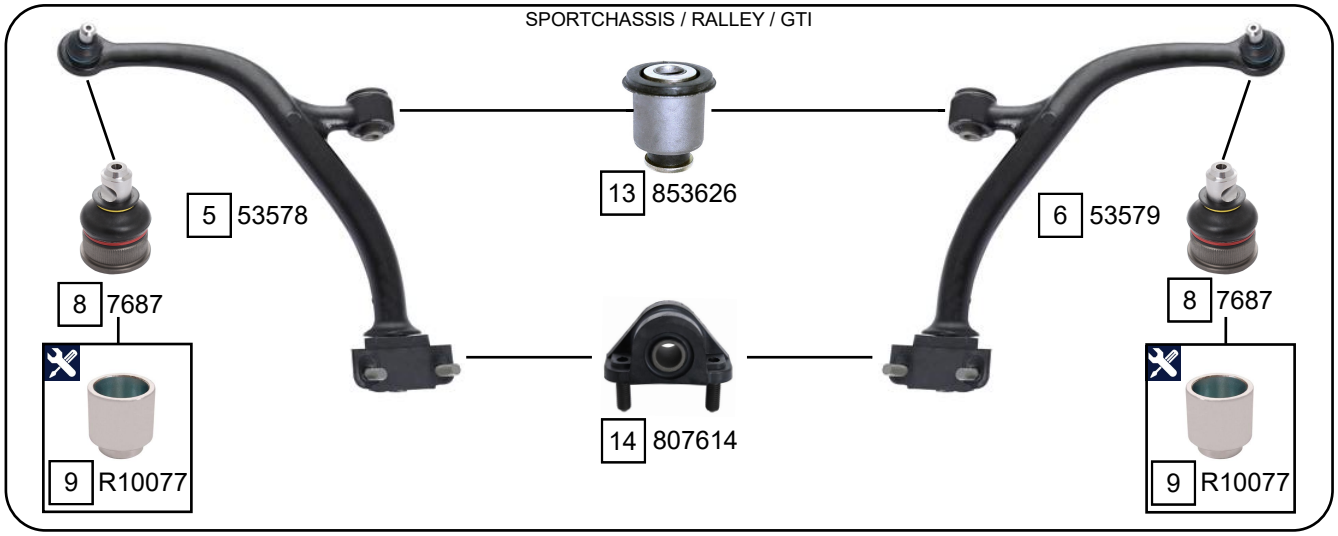

Ref.	Sidem Ref.	Description	OE-number	Measures	Ref.	Sidem Ref.	Description	OE-number	Measures
1	7770	TCA left wbj	96 133 608	c:14	8	7687	ball joint lower	3640 36	c:16 do:36.8
2	7771	TCA right wbj	96 133 609	c:14	9	R10077	mounting tool ring ø42 ø34	SEE PAGE III	di:34 do:42
3	53486	TCA left wbj	3520 78	c:16	10	853605	silentblock for TCA	3523 50	di:12 do:34 (*)
4	53487	TCA right wbj	3520 79	c:16	11	807601	silentblock for TCA	96 133 255	di:13.9 do:33 (*)
5	53578	TCA left wbj	3520 92	c:16	12	807602	silentblock for TCA	3523 51	di:16.8 (*)
6	53579	TCA right wbj	3520 93	c:16	13	853626	silentblock for TCA	3523 52	di:12.2 do:34.2 (*)
7	7682	ball joint	95 603 309	c:14	14	807614	silentblock for TCA	Part of	di:16.8 do:16.8 (*)

Copyright 2021

CITROEN
AX

AX 07/1986 - 12/1998

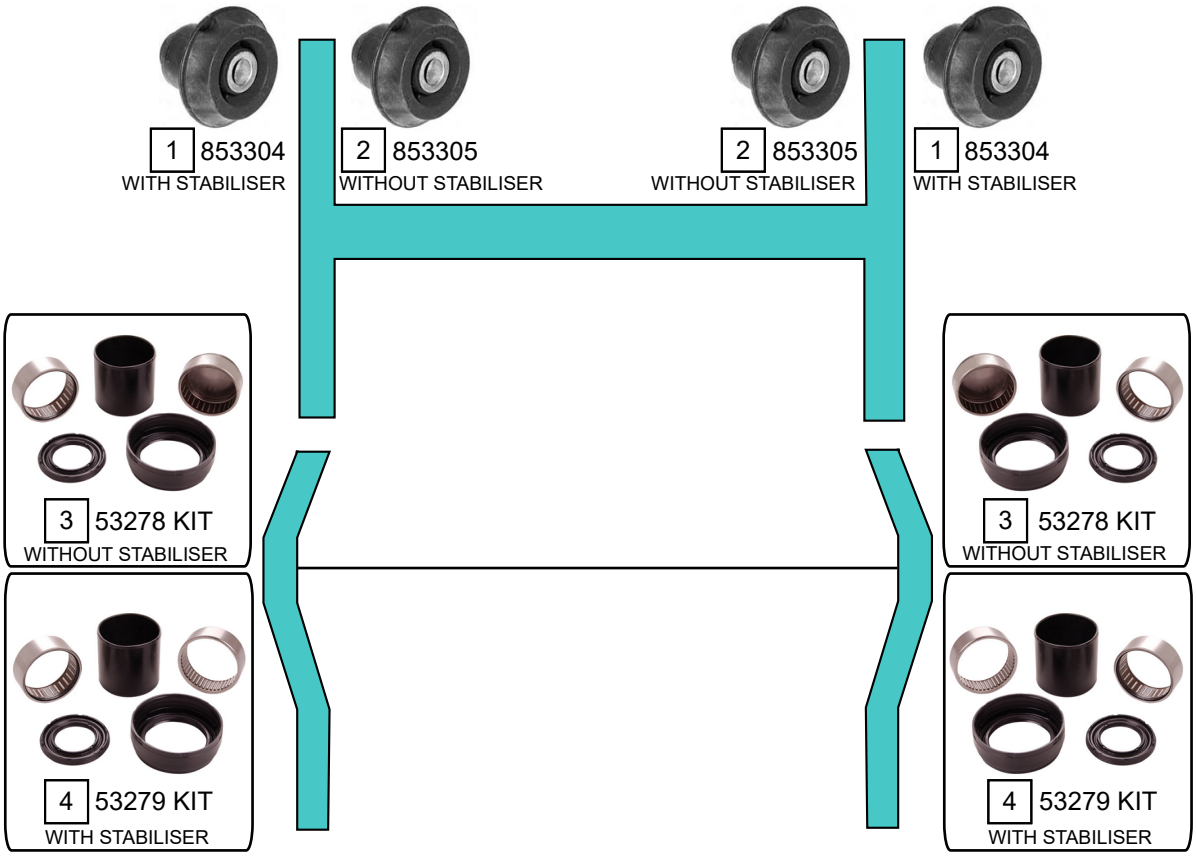

Ref.	Sidem Ref.	Description	OE-number	Measures	Ref.	Sidem Ref.	Description	OE-number	Measures
1	853304	mounting axle body	5131 63	di:12 do:33.4	3	53278 KIT	repair kit rear axle	5131 64 S1	
2	853305	mounting axle body	5131 65	di:12 do:33	4	53279 KIT	repair kit rear axle	5131 64 S1	

Copyright 2021

BERLINGO (M49-M59) 07/1996 - 03/2008

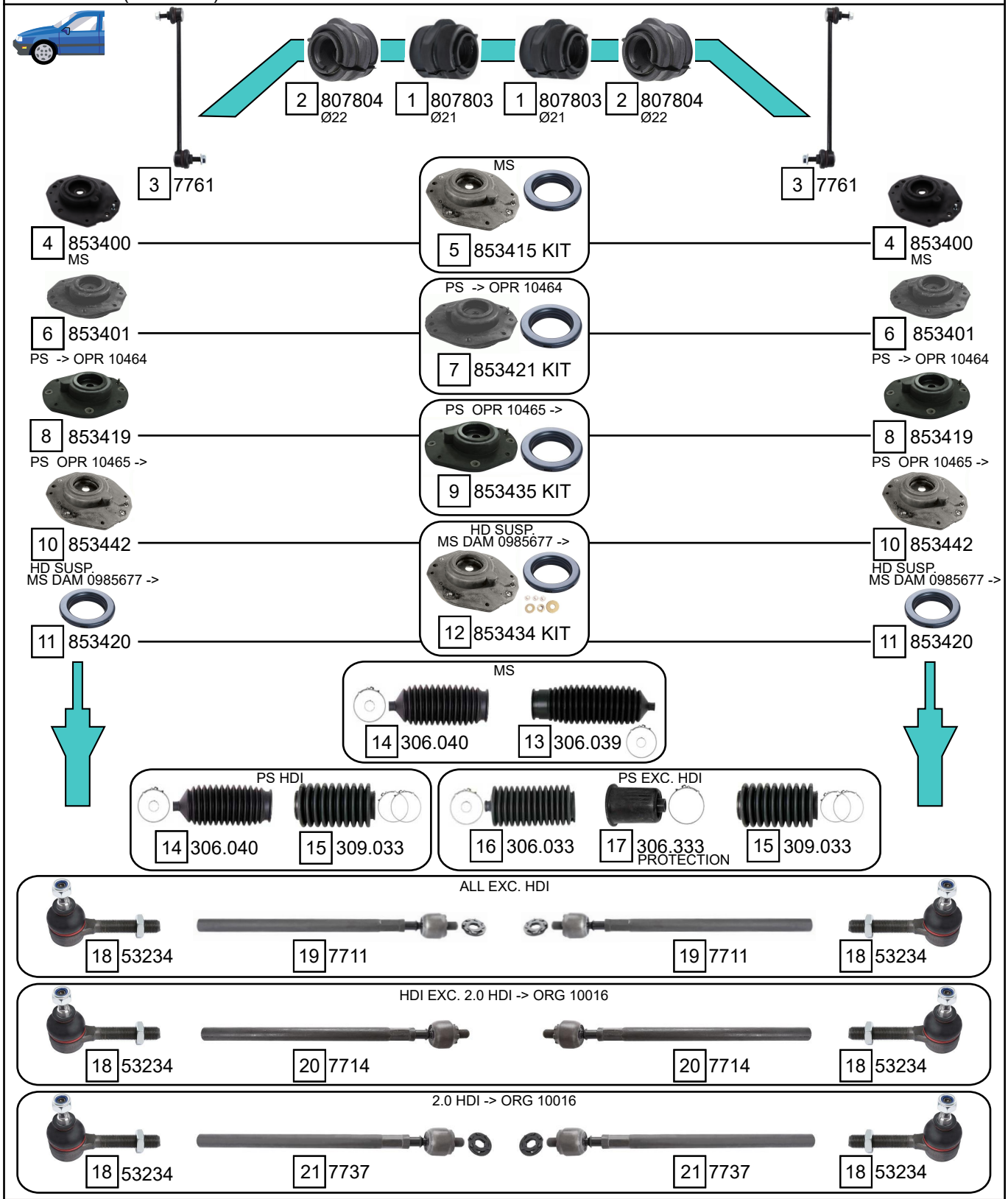

Ref.	Sidem Ref.	description	OE-number	measures	Ref.	Sidem Ref.	description	OE-number	measures
1	807803	stabiliser mounting	5094 65	di:21	12	853434 KIT	strut mount kit	5031 61	di:14.3 do:109.8 L:48
2	807804	stabiliser mounting	5094 77	di:22	13	306.039	steering rack gaiter	4066 44	D:42 d:11 L:185
3	7761	stabiliser link	5087 46	L:300	14	306.040	steering rack gaiter	4066 43	D:42 d:11 L:155
4	853400	strut mount	5038 76	di:14.3 do:108 L:50	15	309.033	steering rack gaiter	4066 22	D:40 d:40 L:115
5	853415 KIT	strut mount kit	5031 72	di:14.2 do:108.6 L:48.5	16	306.033	steering rack gaiter	4066 20	D:40 d:10 L:175
6	853401	strut mount	5038 78	di:14.2 do:87.5 L:49	17	306.333	steering rack gaiter	4066 16	D:39 d:11 L:66
7	853421 KIT	strut mount kit	5031 73	di:14.2 do:87.5	18	53234	tie rod end	3817 50	c:12 th:MM14X1.5R
8	853419	strut mount	5038 62	di:14.2 do:108 L:48.5	19	7711	axial joint	3812 C0	th:MM12X1R L:342
9	853435 KIT	strut mount kit	5031 60	di:14.1 do:109.7 L:48.4	20	7714	axial joint	3812 E4	th:MM12x1R L:336
10	853442	strut mount	5038 64	di:14.3	21	7737	axial joint	3812 C6	th:MM12X1R L:342
11	853420	bearing	5035 27	di:65 do:99.5 L:20					

Copyright 2021

CITROEN
BERLINGO

BERLINGO (M49-M59) 07/1996 - 03/2008

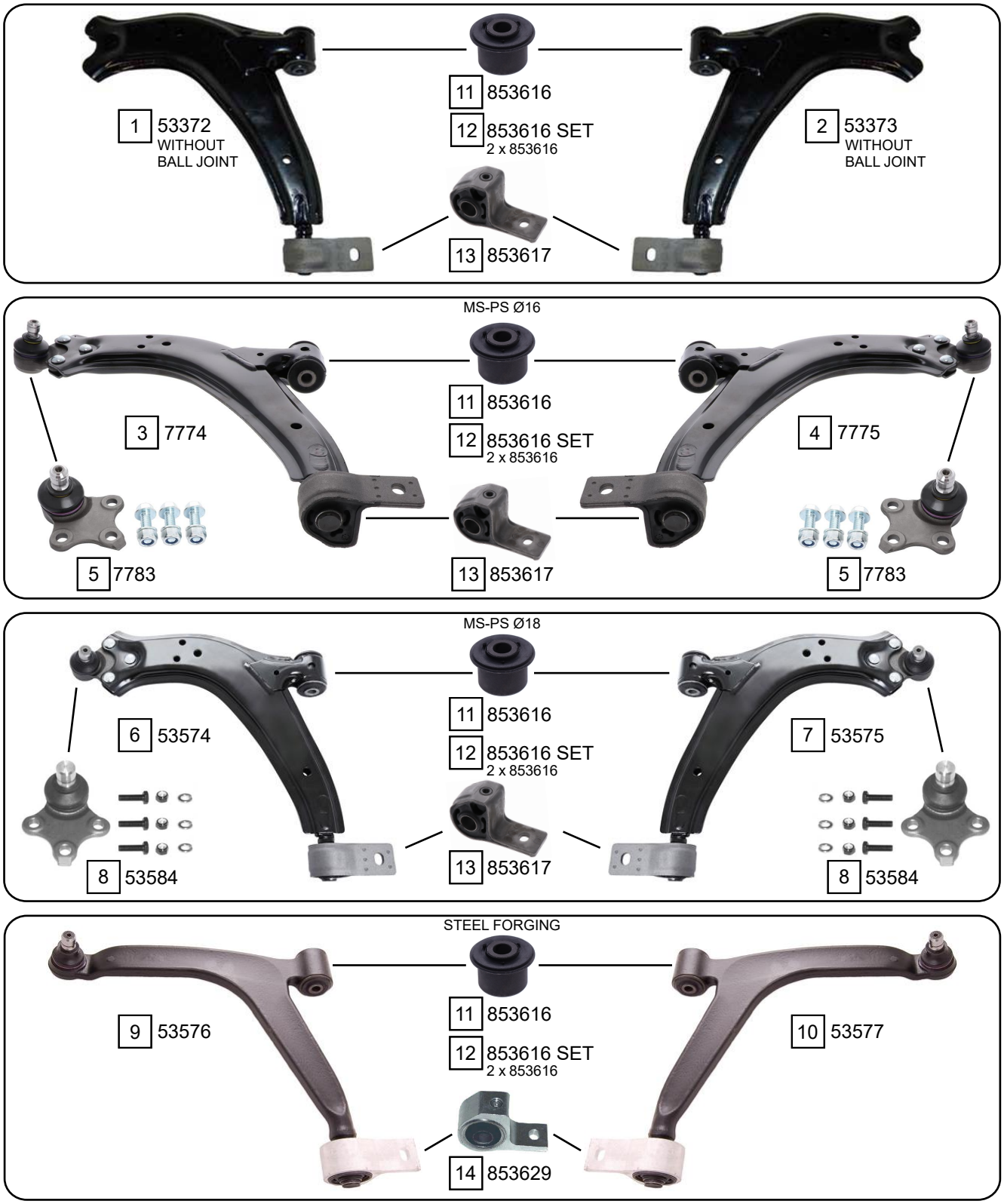

Ref.	Sidem Ref.	Description	OE-number	Measures	Ref.	Sidem Ref.	Description	OE-number	Measures
1	53372	TCA left wobj	3520 H5		8	53584	ball joint	3640 51	c:18
2	53373	TCA right wobj	3521 E5		9	53576	TCA left wbj	3520 V3	c:18
3	7774	TCA left wbj	3520 H6 S1	c:16	10	53577	TCA right wbj	3521 R4	c:18
4	7775	TCA right wbj	3521 E6 S1	c:16	11	853616	silentblock for TCA	Part of	di:12.2 do:33 (*)
5	7783	ball joint	3640 43	c:16	12	853616 SET	silentblock kit	Part of	
6	53574	TCA left wbj	3520 A1	c:18	13	853617	silentblock for TCA	3523 75	di:18.9 do:18.9 (*)
7	53575	TCA right wbj	3521 71	c:18	14	853629	silentblock for TCA	3523 83	di:19 do:19.2 (*)

Copyright 2021

BERLINGO (M49-M59) 07/1996 - 03/2008

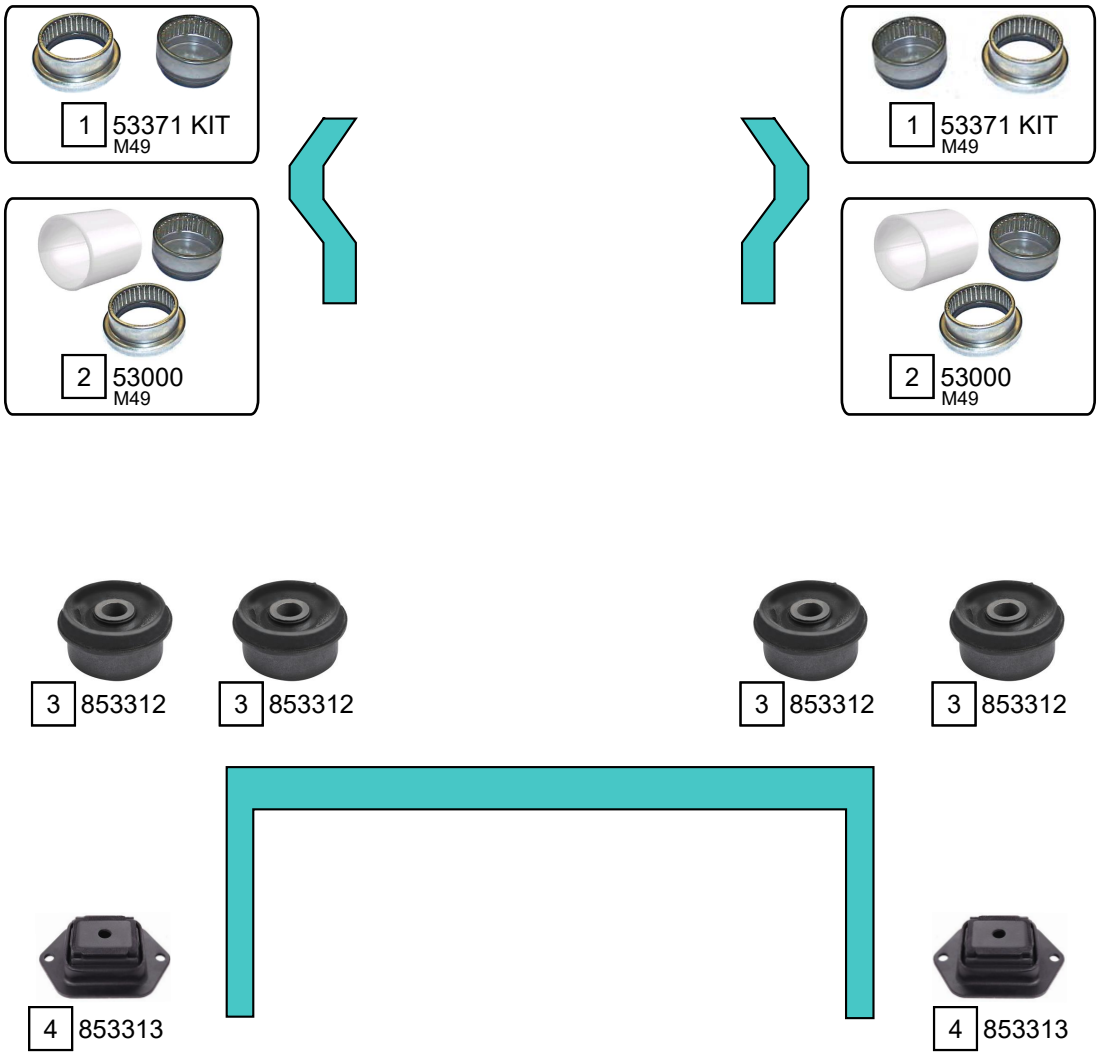

Ref.	Sidem Ref.	Description	OE-number	Measures	Ref.	Sidem Ref.	Description	OE-number	Measures
1	53371 KIT	repair kit rear axle	5131 48 S1		3	853312	mounting axle body	5131 47	di:12.1 do:46.5
2	53000	repair kit rear axle	5131 48 S2		4	853313	mounting axle body	5152 62	di:12.5

Copyright 2021

CITROEN
BERLINGO

BERLINGO (B9) 04/2008 ->

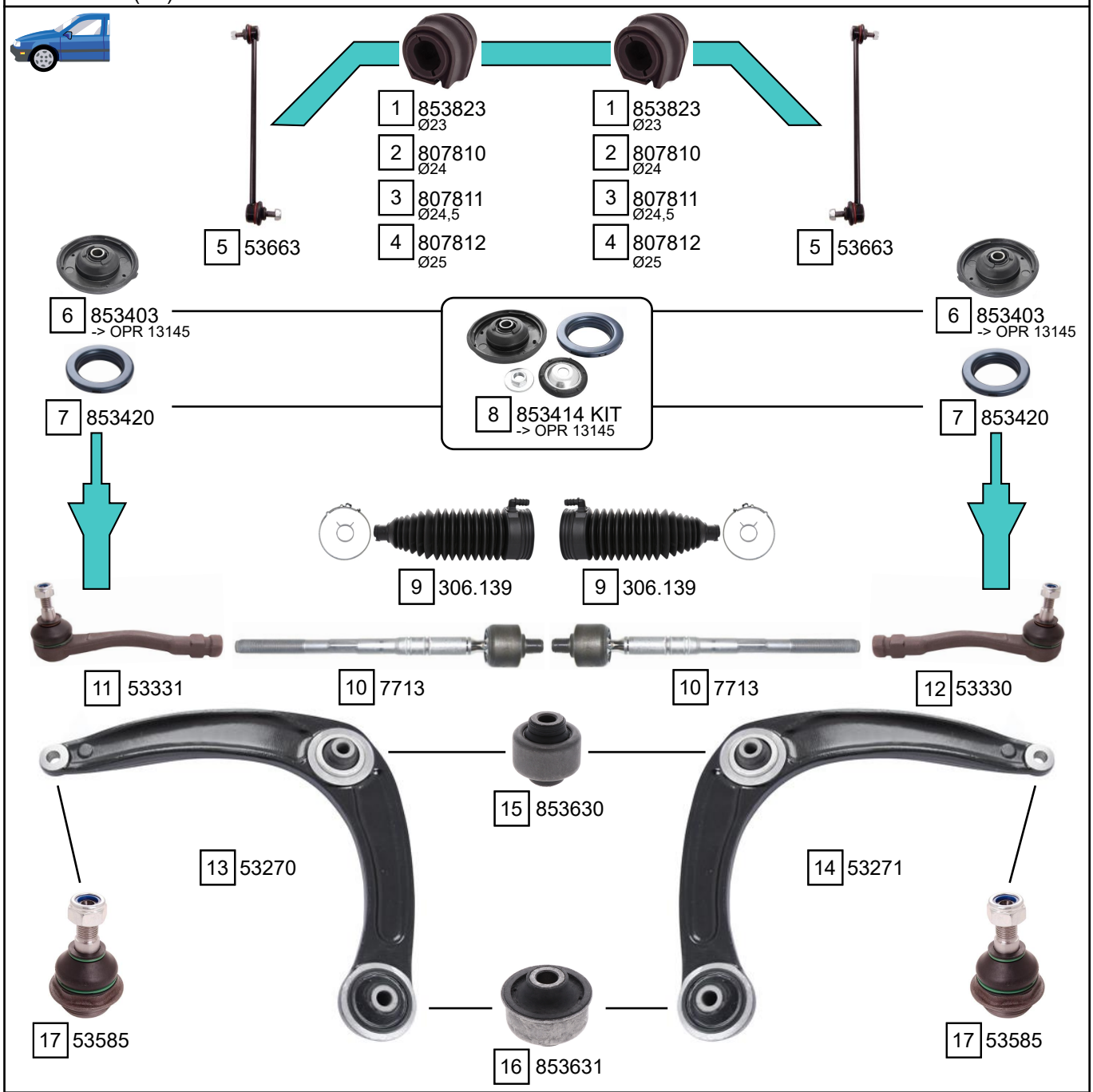

Ref.	Sidem Ref.	Description	OE-number	Measures	Ref.	Sidem Ref.	Description	OE-number	Measures
1	853823	stabiliser mounting	5094 E3	di:22.5	11	53331	tie rod end left	3817 89	c:12 th:FM14x1.5R
2	807810	stabiliser mounting	5094 E4	di:23	12	53330	tie rod end right	3817 88	c:12 th:FM14x1.5R
3	807811	stabiliser mounting	5094 E6	di:23.5	13	53270	TCA left wobj	3520 S2	c:15.2
4	807812	stabiliser mounting	5094 E7	di:21	14	53271	TCA right wobj	3521 P3	c:15.2
5	53663	stabiliser link	5087 57	L:335	15	853630	silentblock for TCA	3523 91	di:14.1 do:55.2 (*)
6	853403	strut mount	5038 G0	di:14.5 do:119 L:29.5	16	853631	silentblock for TCA	3523 92	di:14.2 do:55.3 (*)
7	853420	bearing	5035 27	di:65 do:99.5 L:20	17	53585	ball joint	3640 68	c:15.7
8	853414 KIT	strut mount kit	5038 G0 S1	di:14.5 do:119 L:29.5	18	807301	mounting axle body	5131 H1	di:14.3 do:82
9	306.139	steering rack gaiter	4066 85	D:61 d:15.5 L:190	19	853327	mounting axle body	98 142 118 80	di:14.2 do:81
10	7713	axial joint	3812 F4	th:MM14x1.5R L:262					

Copyright 2021

BERLINGO (K9) 06/2018 ->

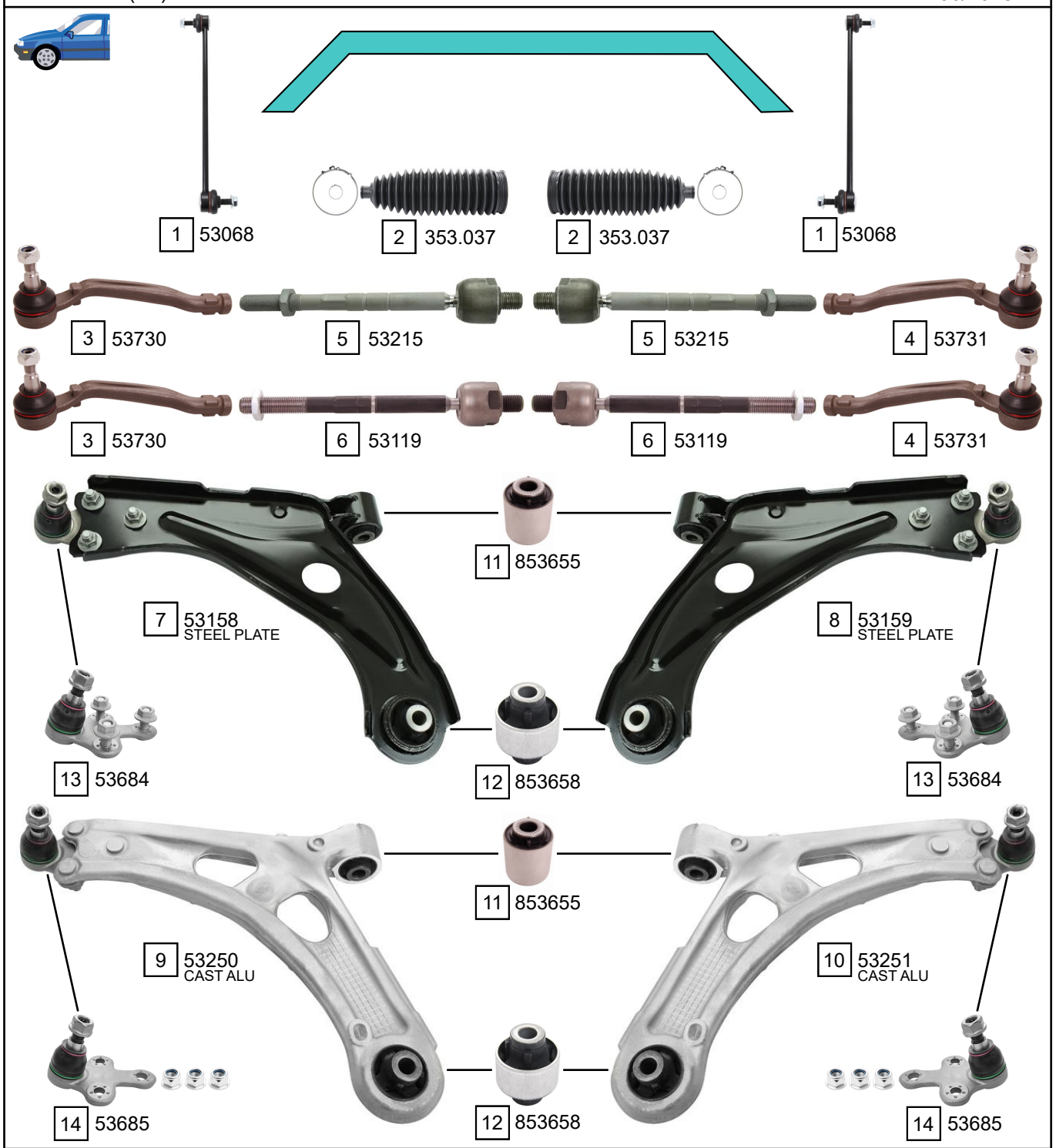

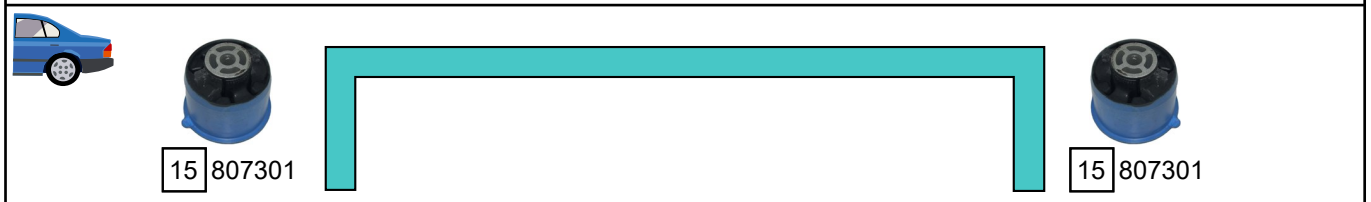

Ref.	Sidem Ref.	Description	OE-number	Measures	Ref.	Sidem Ref.	Description	OE-number	Measures
1	53068	stabiliser link	98 090 457 80	L:335	9	53250	TCA left wbj	98 150 146 80 S1	c:16.7
2	353.037	steering rack gaiter	16 108 175 80	D:51 d:12 L:186	10	53251	TCA right wbj	98 150 143 80 S1	c:16.7
3	53730	tie rod end left	16 108 177 80	c:14.5 th:FM14X1.5R	11	853655	silentblock for TCA	96 760 321 80	di:14.3 do:43.4 (*)
4	53731	tie rod end right	16 108 178 80	c:14.5 th:FM14X1.5R	12	853658	silentblock for TCA	98 163 803 80	di:14.2 do:50 (*)
5	53215	axial joint	16 488 367 80	th:MM14X1.5R L:205	13	53684	ball joint	98 310 885 80	c:16.7
6	53119	axial joint	16 112 423 80	th:MM14X1.5R L:208	14	53685	ball joint	98 310 888 80	c:16.7
7	53158	TCA left wbj	98 168 655 80 S2	c:16.7	15	807301	mounting axle body	5131 H1	di:14.3 do:82
8	53159	TCA right wbj	98 168 654 80 S2	c:16.7					

Copyright 2021

CITROEN
BX

BX 04/1983 - 12/1994

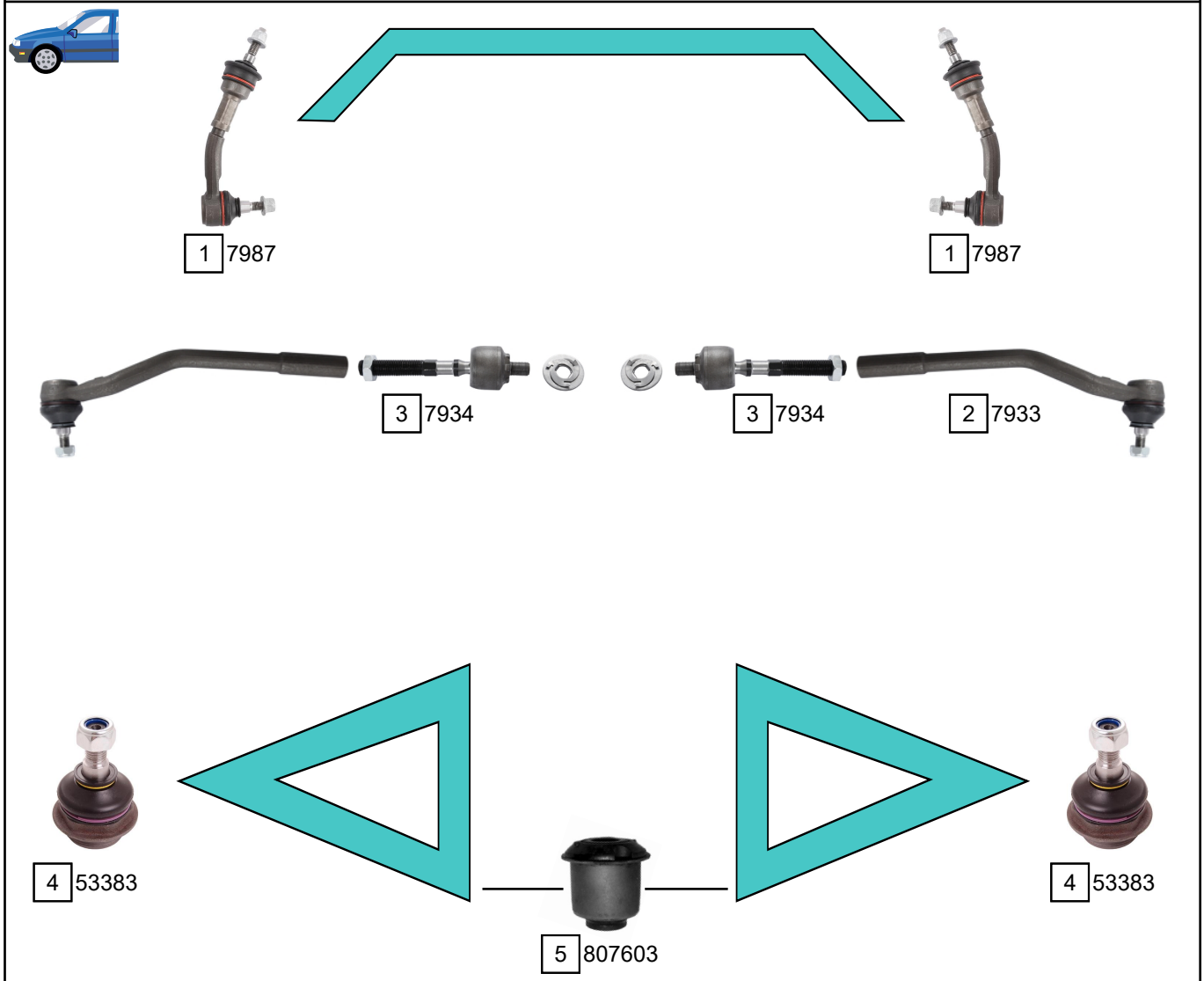

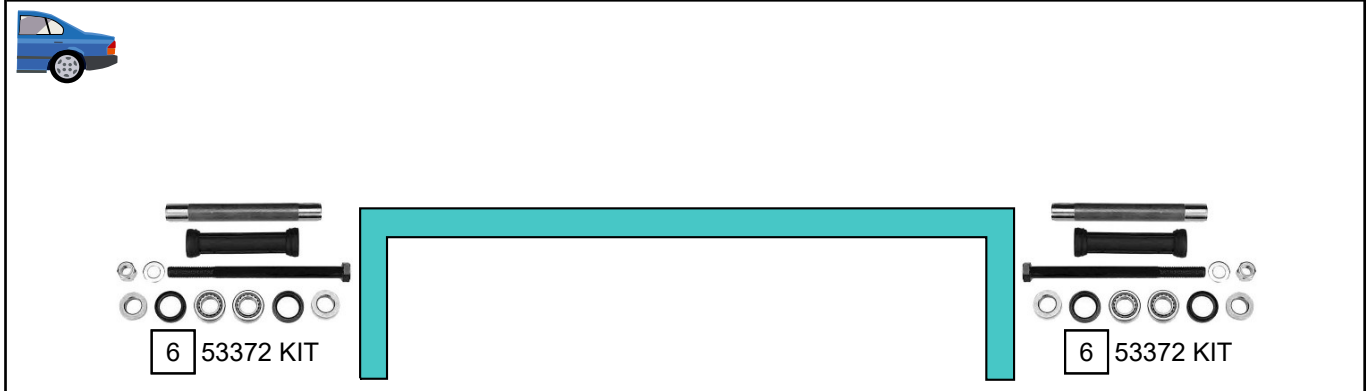

Ref.	Sidem Ref.	Description	OE-number	Measures	Ref.	Sidem Ref.	Description	OE-number	Measures
1	7987	stabiliser link	95 597 955	L:150	4	53383	ball joint lower	3640 21	c:14.3
2	7933	tie rod end right	95 496 045	c:12.9 th:FM14x1.5R	5	807603	silentblock for TCA	Part of	di:16.2 do:40.2 (*)
3	7934	axial joint	Part of	th:MM12X1R L:124	6	53372 KIT	repair kit rear axle	5132 44 S1	

Copyright 2021

C-CROSSER (EP) 02/2007 - 06/2012

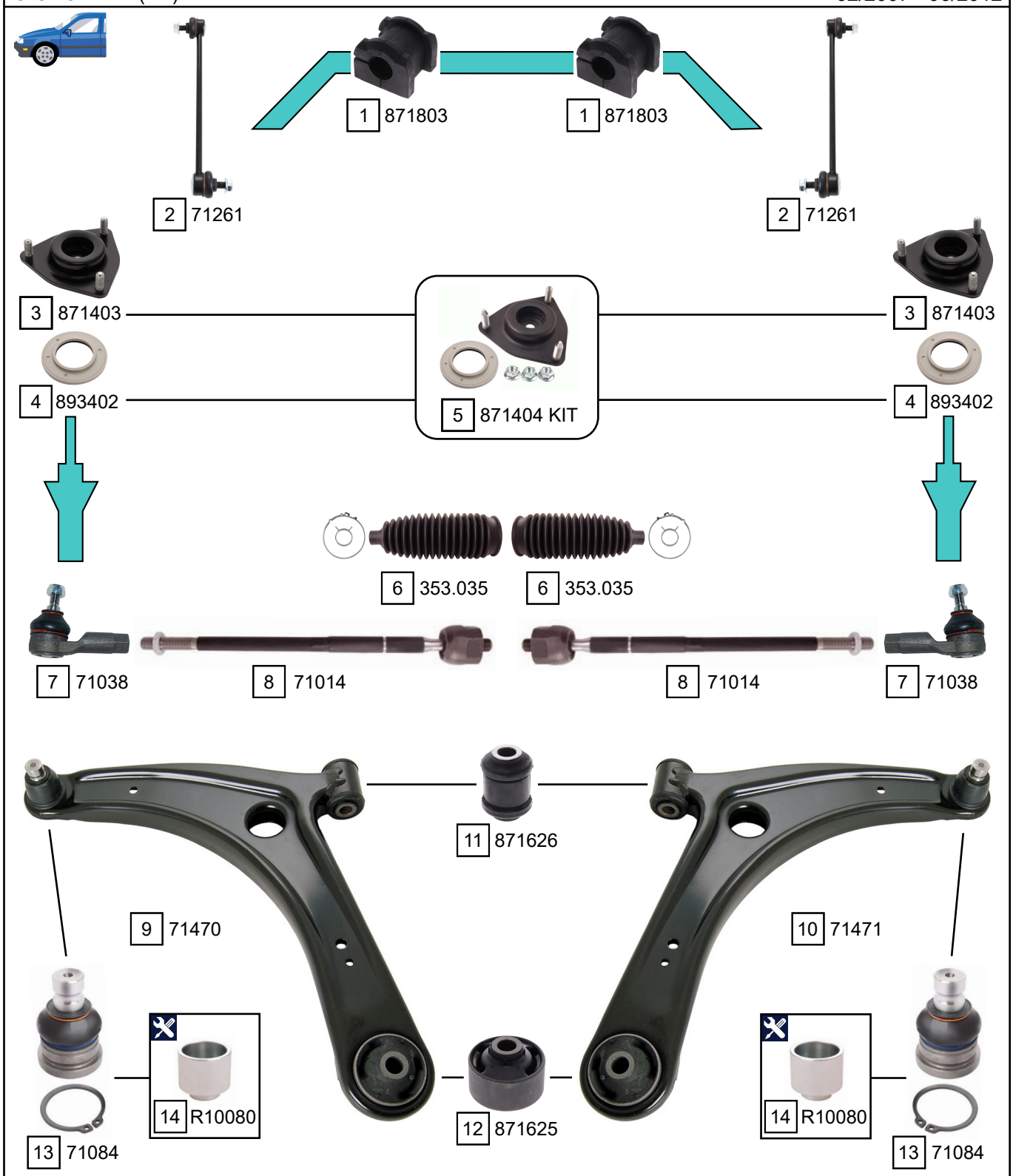

Ref.	Sidem Ref.	Description	OE-number	Measures	Ref.	Sidem Ref.	Description	OE-number	Measures
1	871803	stabiliser mounting	5094 C6	di:22	8	71014	axial joint	3812 F1	th:MM14X1.5R L:342
2	71261	stabiliser link	5087 58	L:265	9	71470	TCA left wbj	16 124 483 80	c:20
3	871403	strut mount	5038 F8	di:12.4 L:32.5	10	71471	TCA right wbj	16 124 484 80	c:20
4	893402	bearing	5033 C4	di:36.1 do:64 L:9	11	871626	silentblock for TCA	Part of	di:14.1 do:37 (*)
5	871404 KIT	strut mount kit	5038 F8 S1	di:12.4 L:37	12	871625	silentblock for TCA	3523 CS	di:14.1 do:60 (*)
6	353.035	steering rack gaiter	4066 84	D:46 d:14 L:175	13	71084	ball joint	Part of	c:20 do:40.1
7	71038	tie rod end	3817 74	c:13.3 th:FM14x1.5R	14	R10080	mounting tool ring ø48 ø40	SEE PAGE III	di:40 do:48

Copyright 2021

CITROEN
C-CROSSER

C-CROSSER (EP) 02/2007 - 06/2012

1 871300

1 871300

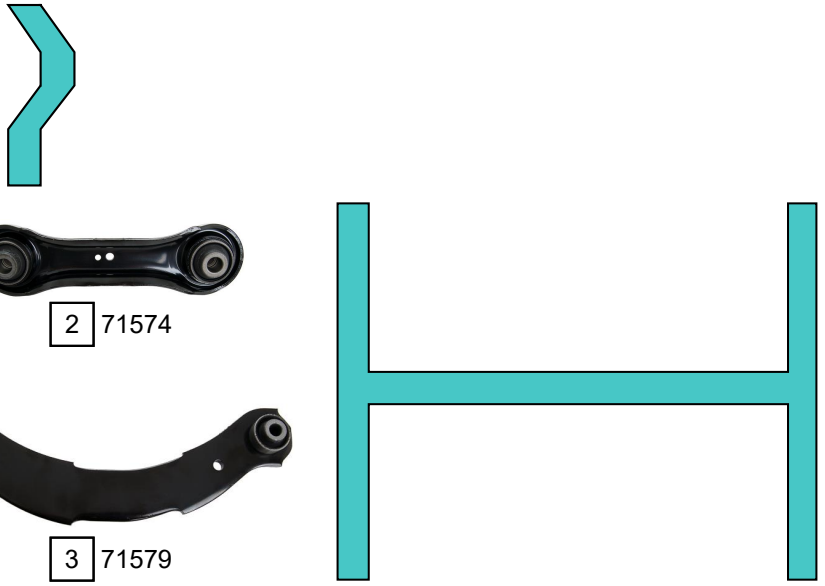

2 71574

2 71574

3 71579

3 71579

2.0 L

4 71577

4 71577

7 871700

7 871700

7 871700

2.4 L + 2.2 HDI

7 871700

5 71670

7 871700

6 71671

7 871700

8 71262

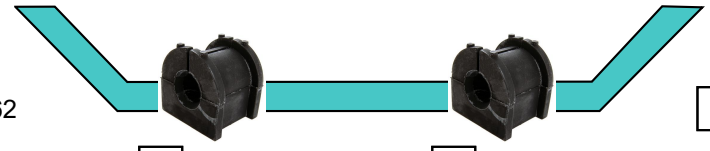

10 871906

10 871906

9 71263

Ref.	Sidem Ref.	Description	OE-number	Measures	Ref.	Sidem Ref.	Description	OE-number	Measures
1	871300	mounting axle body	16 118 561 80	do:70	6	71671	TCA right	5175 EA	L:505
2	71574	track rod	16 074 987 80	L:165	7	871700	silentblock for TCA	16 099 120 80	di:12.2 do:35.7 (*)
3	71579	track rod	5175 EH	L:315	8	71262	stabiliser link left	5178 48	L:80
4	71577	TCA	16 062 930 80	L:505	9	71263	stabiliser link right	5178 49	L:80
5	71670	TCA left	5175 CZ	L:505	10	871906	stabiliser mounting	16 099 137 80	di:15.6

Copyright 2021

C-ELYSEE 11/2012 ->

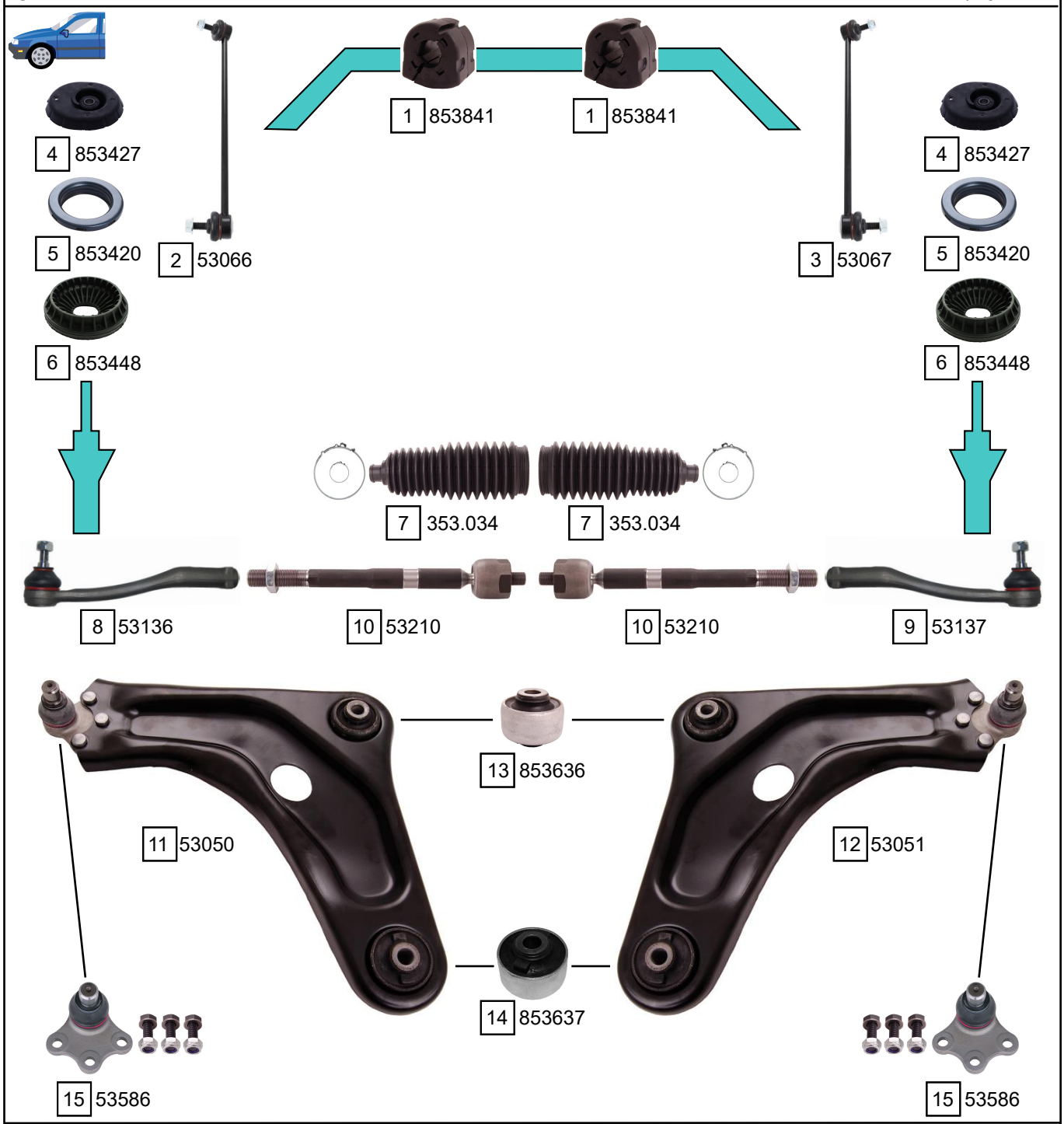

Ref.	Sidem Ref.	Description	OE-number	Measures	Ref.	Sidem Ref.	Description	OE-number	Measures
1	853841	stabiliser mounting	16 083 885 80	di:20.5	9	53137	tie rod end right	3817 68	c:12.1 th:FM16X1.5R
2	53066	stabiliser link left	5087 69	L:330	10	53210	axial joint	16 086 521 80	th:MM12X1R L:230
3	53067	stabiliser link right	5087 68	L:330	11	53050	TCA left wbj	96 750 318 80	c:18
4	853427	strut mount	5038 G6	di:14.3 do:66.5 L:28.5	12	53051	TCA right wbj	96 750 288 80	c:18
5	853420	bearing	5035 27	di:65 do:99.5 L:20	13	853636	silentblock for TCA	3523 CE	di:14.2 do:56.5 (*)
6	853448	strut mount	5033 C3	di:33 do:106 L:47	14	853637	silentblock for TCA	3523 CC	di:14.2 do:56.5 (*)
7	353.034	steering rack gaiter	4066 80	D:51 d:15.5 L:185	15	53586	ball joint	3640 77	c:18
8	53136	tie rod end left	3817 67	c:12.1 th:FM16X1.5R	16	807303	mounting axle body	5131 H4	di:12.2 do:72

Copyright 2021

CITROEN
C-ZERO

C-ZERO 10/2010 ->

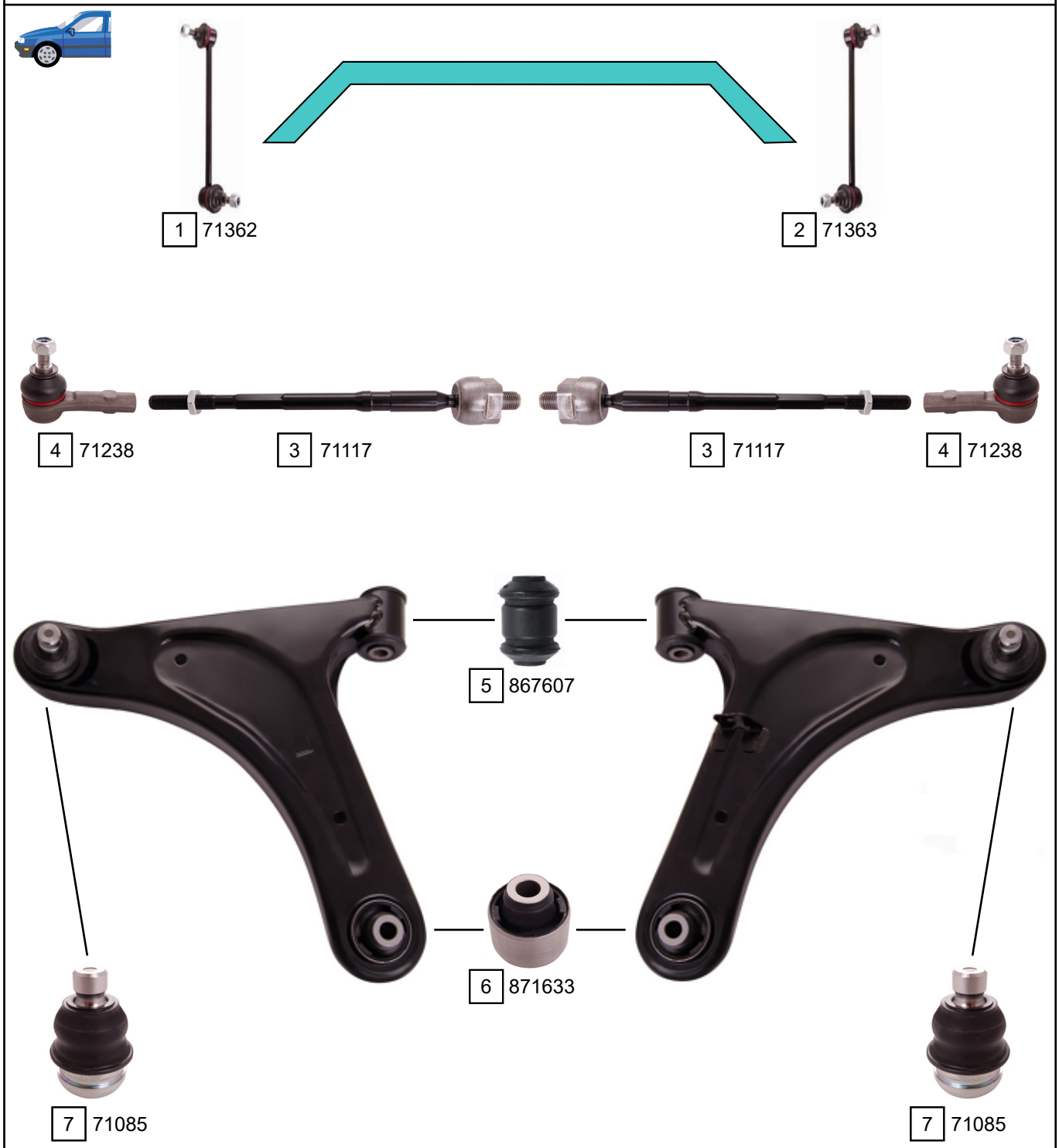

Ref.	Sidem Ref.	Description	OE-number	Measures	Ref.	Sidem Ref.	Description	OE-number	Measures
1	71362	stabiliser link left	5087 80	L:240	5	867607	silentblock for TCA	Part of	di:12 do:37 (*)
2	71363	stabiliser link right	5087 81	L:240	6	871633	silentblock for TCA	Part of	di:12.3 do:45 (*)
3	71117	axial joint	3812 G6	th:MM14x1.5R L:264	7	71085	ball joint	Part of	c:18 do:39.9
4	71238	tie rod end	3817 A6	c:13.4 th:FM12X1.25R					

Copyright 2021

C1 I (PM_,PN_) 06/2005 - 03/2014

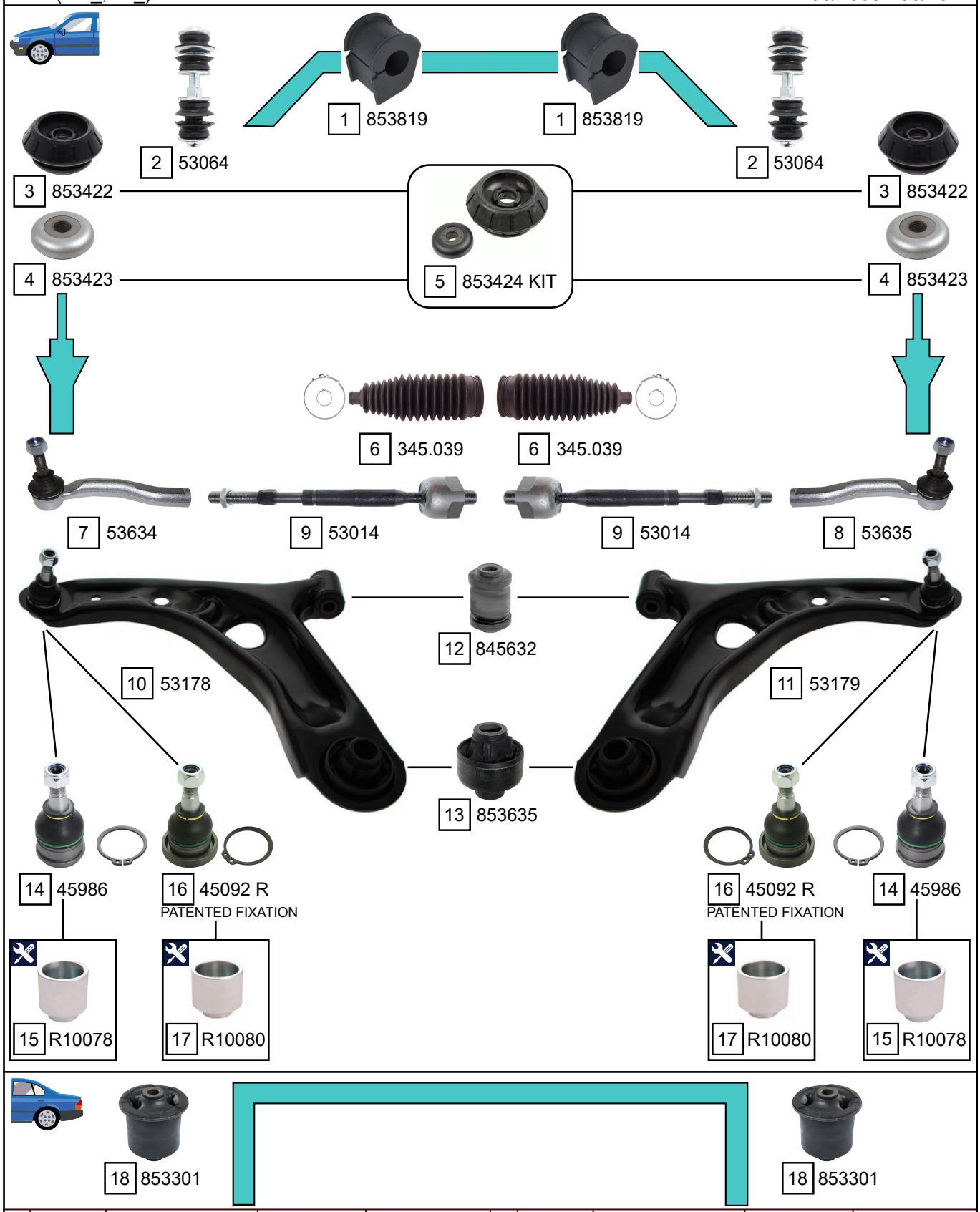

Ref.	Sidem Ref.	Description	OE-number	Measures	Ref.	Sidem Ref.	Description	OE-number	Measures
1	853819	stabiliser mounting	5094 A8	di:22	10	53178	TCA left wbj	3520 Q2	c:13.5
2	53064	stabiliser link	5091 10 S1	L:92	11	53179	TCA right wbj	3521 L3	c:13.5
3	853422	strut mount	5038 F6	di:20.5 do:91.5 L:46.2	12	845632	silentblock for TCA	Part of	di:12.1 do:32.5 (*)
4	853423	bearing	5035 57	di:12.2 do:45.3 L:18.9	13	853635	silentblock for TCA	Part of	di:19.1 do:57.2 (*)
5	853424 KIT	strut mount kit	5031 C2	di:20.5 do:91.6 L:46.2	14	45986	ball joint lower	Part of	c:13.5 do:36.8
6	345.039	steering rack gaiter	4066 A3	D:51 d:11.5 L:170	15	R10078	mounting tool ring ø44 ø36	SEE PAGE III	di:36 do:44
7	53634	tie rod end left	3817 63	c:12.5 th:FM12X1.25R	16	45092 R	ball joint	Part of	c:13.5 do:36.8
8	53635	tie rod end right	3817 64	c:12.5 th:FM12X1.25R	17	R10080	mounting tool ring ø48 ø40	SEE PAGE III	di:40 do:48
9	53014	axial joint	Part of	th:MM14X1.5R L:223	18	853301	mounting axle body	5131 C9	di:12.4 do:59

Copyright 2021

CITROEN
C1

C1 II 04/2014 ->

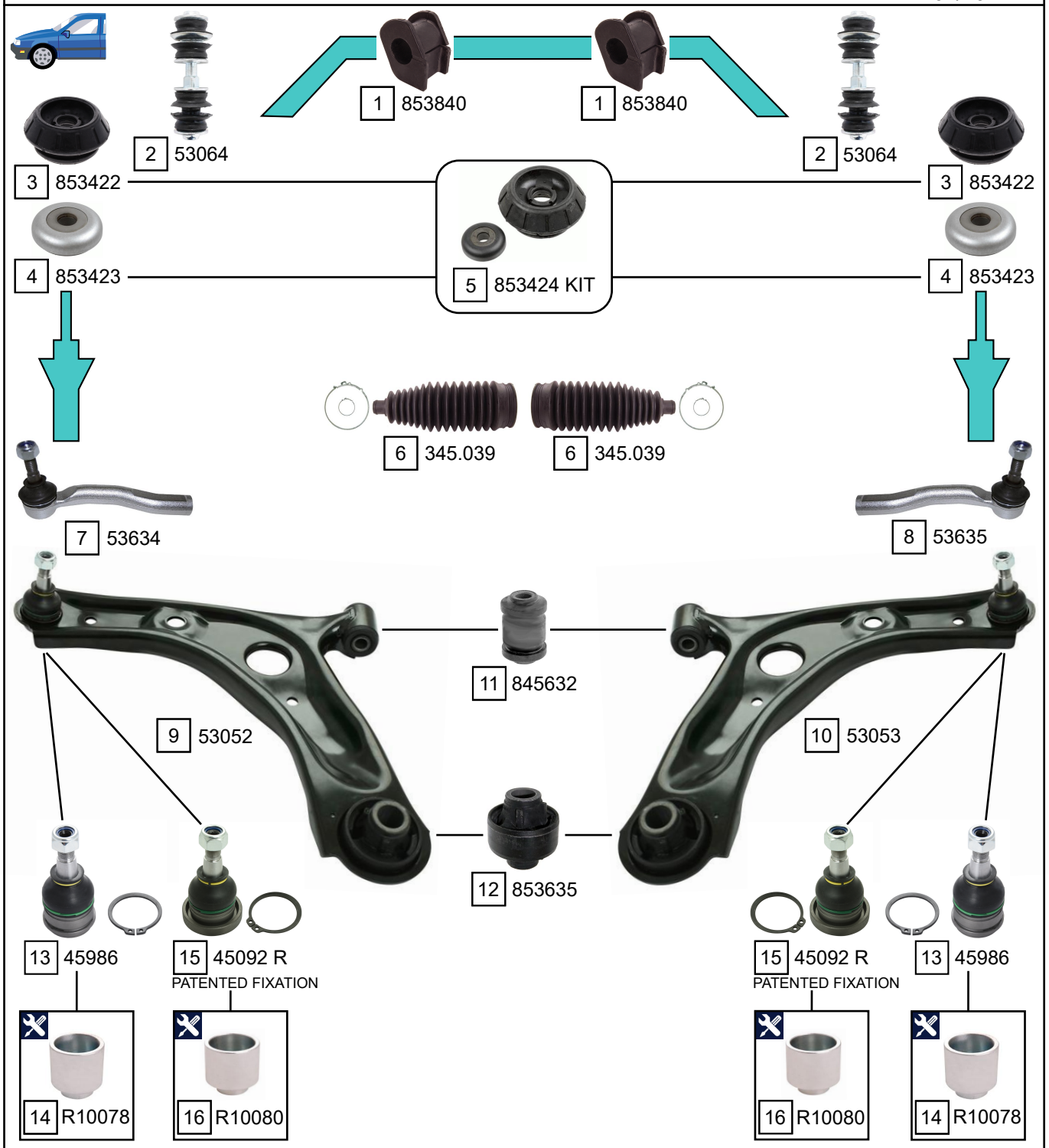

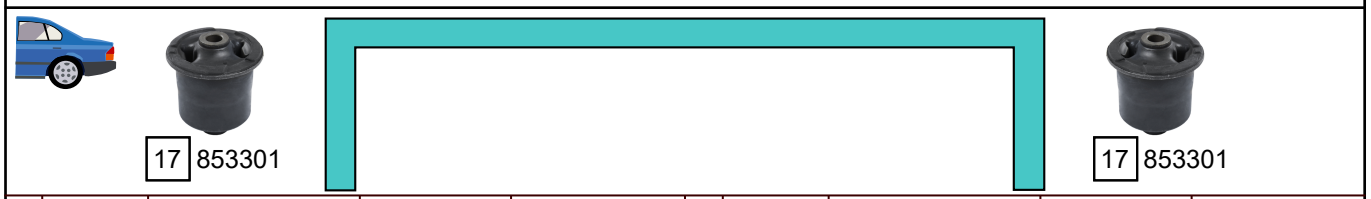

Ref.	Sidem Ref.	Description	OE-number	Measures	Ref.	Sidem Ref.	Description	OE-number	Measures
1	853840	stabiliser mounting	B0 007 433 80	di:23.5	10	53053	TCA right wbj	16 141 916 80	c:13.5
2	53064	stabiliser link	5091 10 S1	L:92	11	845632	silentblock for TCA	Part of	di:12.1 do:32.5 (*)
3	853422	strut mount	5038 F6	di:20.5 do:91.5 L:46.2	12	853635	silentblock for TCA	Part of	di:19.1 do:57.2 (*)
4	853423	bearing	5035 57	di:12.2 do:45.3 L:18.9	13	45986	ball joint lower	Part of	c:13.5 do:36.8
5	853424 KIT	strut mount kit	5031 C2	di:20.5 do:91.6 L:46.2	14	R10078	mounting tool ring ø44 ø36	SEE PAGE III	di:36 do:44
6	345.039	steering rack gaiter	4066 A3	D:51 d:11.5 L:170	15	45092 R	ball joint	Part of	c:13.5 do:36.8
7	53634	tie rod end left	3817 63	c:12.5 th:FM12X1.25R	16	R10080	mounting tool ring ø48 ø40	SEE PAGE III	di:40 do:48
8	53635	tie rod end right	3817 64	c:12.5 th:FM12X1.25R	17	853301	mounting axle body	5131 C9	di:12.4 do:59
9	53052	TCA left wbj	16 141 914 80	c:13.5					

Copyright 2021

C2 (JM) 09/2003 ->

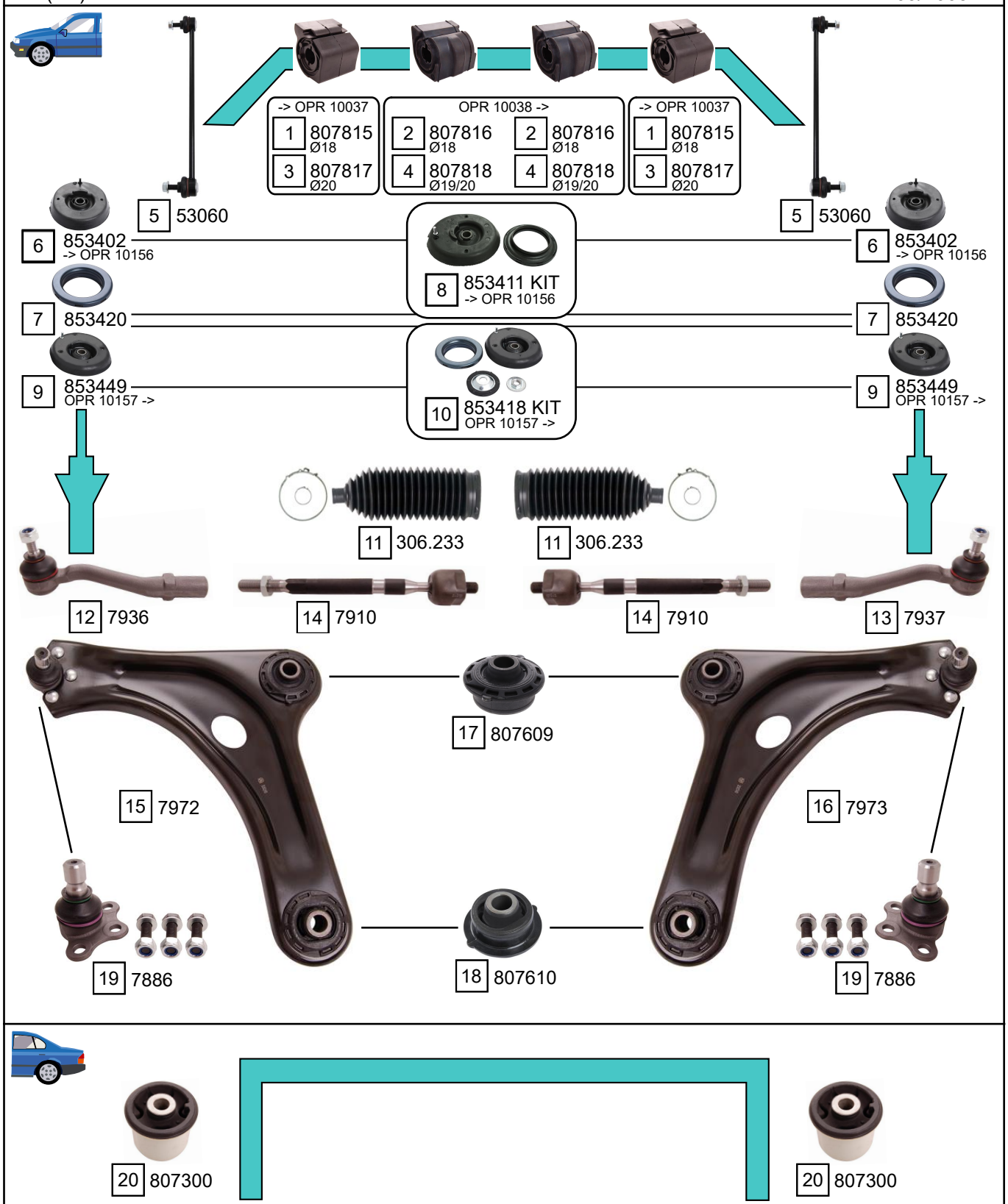

Ref.	Sidem Ref.	Description	OE-number	Measures	Ref.	Sidem Ref.	Description	OE-number	Measures
1	807815	stabiliser mounting	5094 97	di:16	11	306.233	steering rack gaiter	4066 69	D:50 d:14 L:165
2	807816	stabiliser mounting	5094 A9	di:18	12	7936	tie rod end left	3817 55	c:12.2 th:FM14X1.5R
3	807817	stabiliser mounting	5094 96	di:20	13	7937	tie rod end right	3817 56	c:12.2 th:FM14X1.5R
4	807818	stabiliser mounting	5094 A6	di:19.5	14	7910	axial joint	3812 E1	th:MM12X1R L:235.5
5	53060	stabiliser link	5087 59	L:336	15	7972	TCA left wbj	3520 L4	c:18
6	853402	strut mount	5038 91	di:14.3 L:34	16	7973	TCA right wbj	3521 H6	c:18
7	853420	bearing	5035 27	di:65 do:99.5 L:20	17	807609	silentblock for TCA	3523 98	di:18 do:56 (*)
8	853411 KIT	strut mount kit	5031 80	di:14.2 do:122 L:42	18	807610	silentblock for TCA	3523 AA	di:18 do:56 (*)
9	853449	strut mount	5038 F5	di:14.2	19	7886	ball joint	3640 65	c:18
10	853418 KIT	strut mount kit	5031 96	di:14.2	20	807300	mounting axle body	5131 C1	di:13 do:61

Copyright 2021

CITROEN
C3

C3 I (FC) 05/2002 - 04/2014

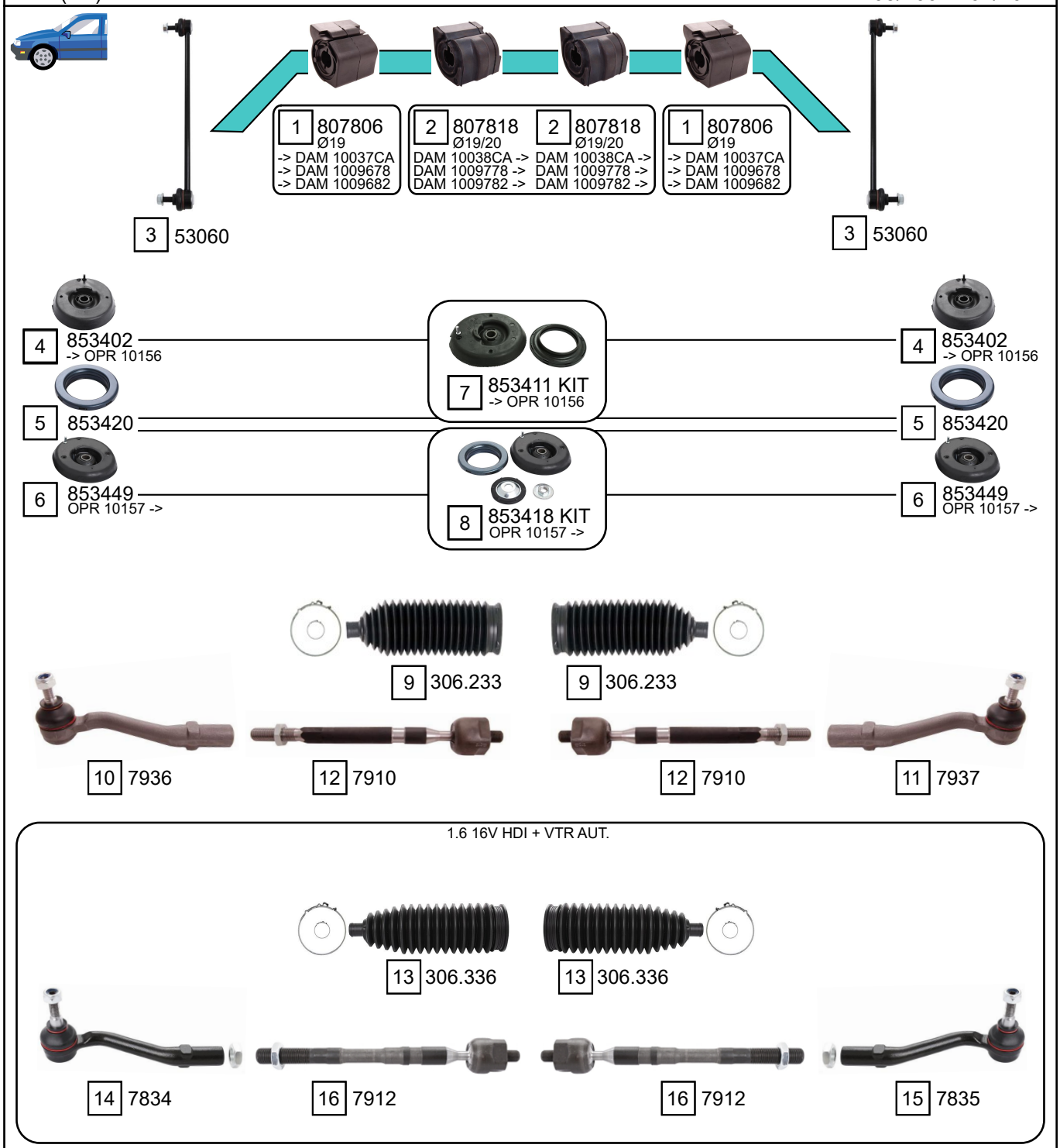

Ref.	Sidem Ref.	Description	OE-number	Measures	Ref.	Sidem Ref.	Description	OE-number	Measures
1	807806	stabiliser mounting	5094 91	di:19	9	306.233	steering rack gaiter	4066 69	D:50 d:14 L:165
2	807818	stabiliser mounting	5094 A6	di:19.5	10	7936	tie rod end left	3817 55	c:12.2 th:FM14X1.5R
3	53060	stabiliser link	5087 59	L:336	11	7937	tie rod end right	3817 56	c:12.2 th:FM14X1.5R
4	853402	strut mount	5038 91	di:14.3 L:34	12	7910	axial joint	3812 E1	th:MM12X1R L:235.5
5	853420	bearing	5035 27	di:65 do:99.5 L:20	13	306.336	steering rack gaiter	4066 76	D:50 d:16 L:168
6	853449	strut mount	5038 F5	di:14.2	14	7834	tie rod end left	3817 62	c:12.1 th:FM16X1.5R
7	853411 KIT	strut mount kit	5031 80	di:14.2 do:122 L:42	15	7835	tie rod end right	3817 61	c:12.1 th:FM16X1.5R
8	853418 KIT	strut mount kit	5031 96	di:14.2	16	7912	axial joint	3812 E6	th:MM12X1R L:238

Copyright 2021

C3 I (FC) 05/2002 - 04/2014

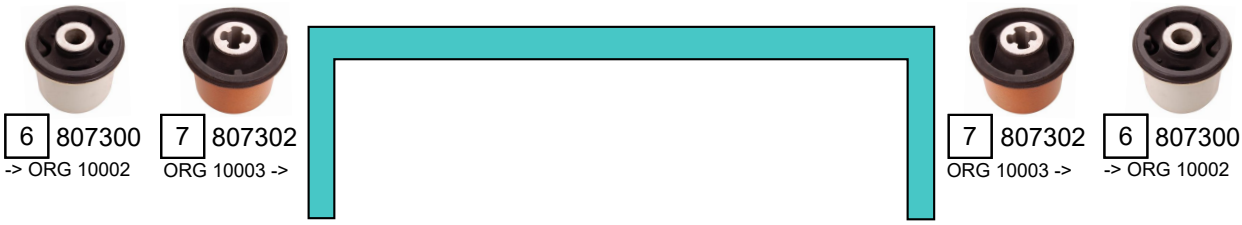

Ref.	Sidem Ref.	Description	OE-number	Measures	Ref.	Sidem Ref.	Description	OE-number	Measures
1	7972	TCA left wbj	3520 L4	c:18	5	807610	silentblock for TCA	3523 AA	di:18 do:56 (*)
2	7973	TCA right wbj	3521 H6	c:18	6	807300	mounting axle body	5131 C1	di:13 do:61
3	7886	ball joint	3640 65	c:18	7	807302	mounting axle body	5131 C6	di:12 do:61
4	807609	silentblock for TCA	3523 98	di:18 do:56 (*)					

Copyright 2021

CITROEN
C3

C3 II (A51) 11/2009 ->

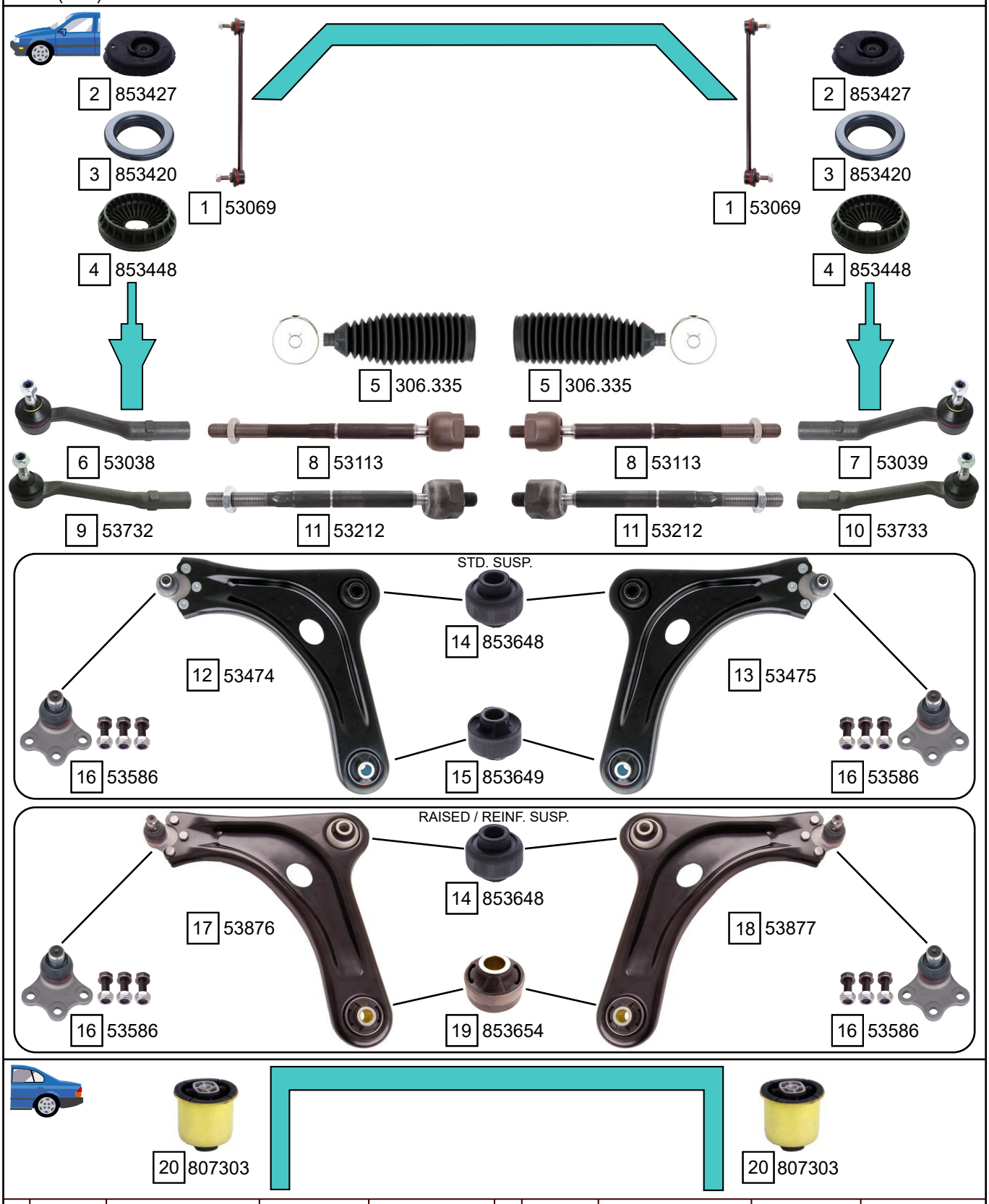

Ref.	Sidem Ref.	Description	OE-number	Measures	Ref.	Sidem Ref.	Description	OE-number	Measures
1	53069	stabiliser link	5087 71	L:335	11	53212	axial joint	16 231 408 80	th:MM14X125R L:230
2	853427	strut mount	5038 G6	di:14.3 do:66.5 L:28.5	12	53474	TCA left wbj	3520 W8	c:18
3	853420	bearing	5035 27	di:65 do:99.5 L:20	13	53475	TCA right wbj	3521 T0	c:18
4	853448	strut mount	5033 C3	di:33 do:106 L:47	14	853648	silentblock for TCA	3523 EA	di:18 do:55.3 (*)
5	306.335	steering rack gaiter	4066 97	D:53 d:13 L:192	15	853649	silentblock for TCA	3523 EE	di:18 do:55.3 (*)
6	53038	tie rod end left	3817 92	c:12.2 th:FM14X1.5R	16	53586	ball joint	3640 77	c:18
7	53039	tie rod end right	3817 91	c:12.2 th:FM14X1.5R	17	53876	TCA left wbj	98 032 865 80	c:18
8	53113	axial joint	3812 F6	th:MM12x1R L:245	18	53877	TCA right wbj	98 032 864 80	c:18
9	53732	tie rod end left	16 231 410 80	c:12.2 th:FM14X1.5R	19	853654	silentblock for TCA	Part of	di:18 do:55.3 (*)
10	53733	tie rod end right	16 231 411 80	c:12.2 th:FM14.X1.5R	20	807303	mounting axle body	5131 H4	di:12.2 do:72

Copyright 2021

C3 III (SX) 07/2016 ->

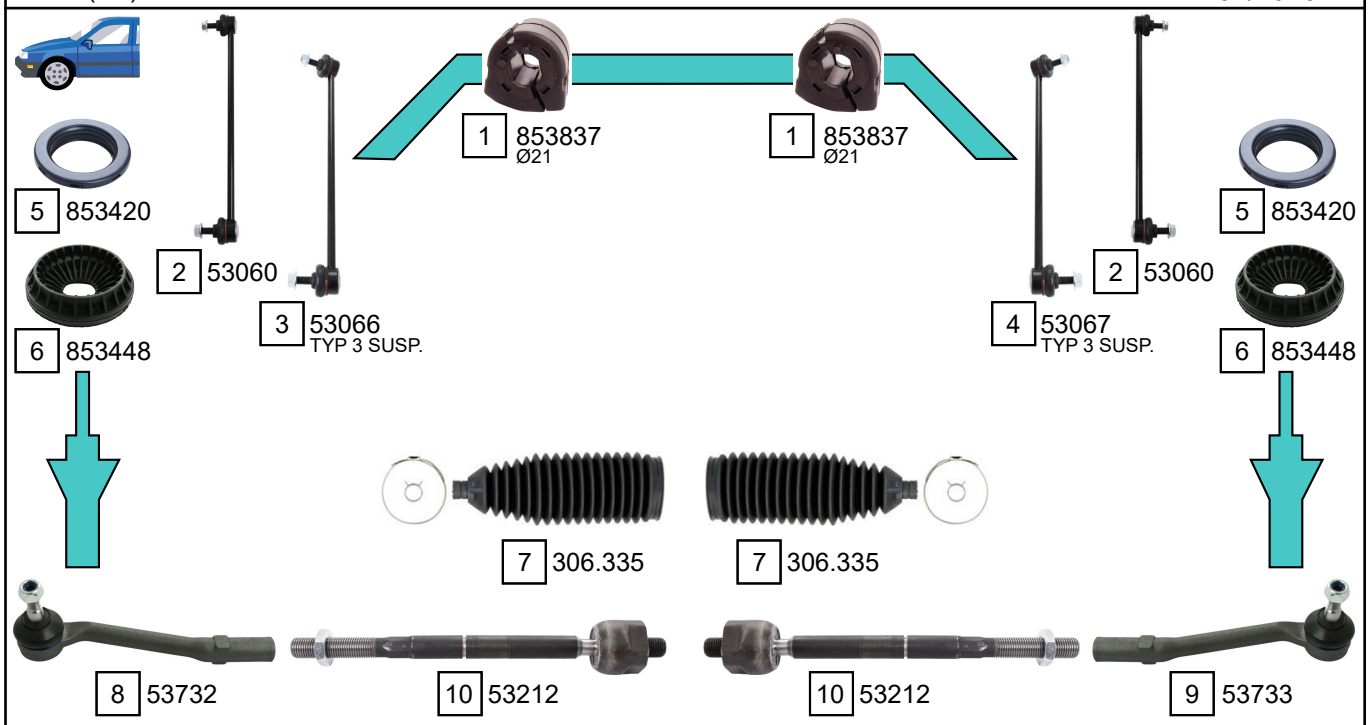

STANDARD SUSP. -> OPR 15665

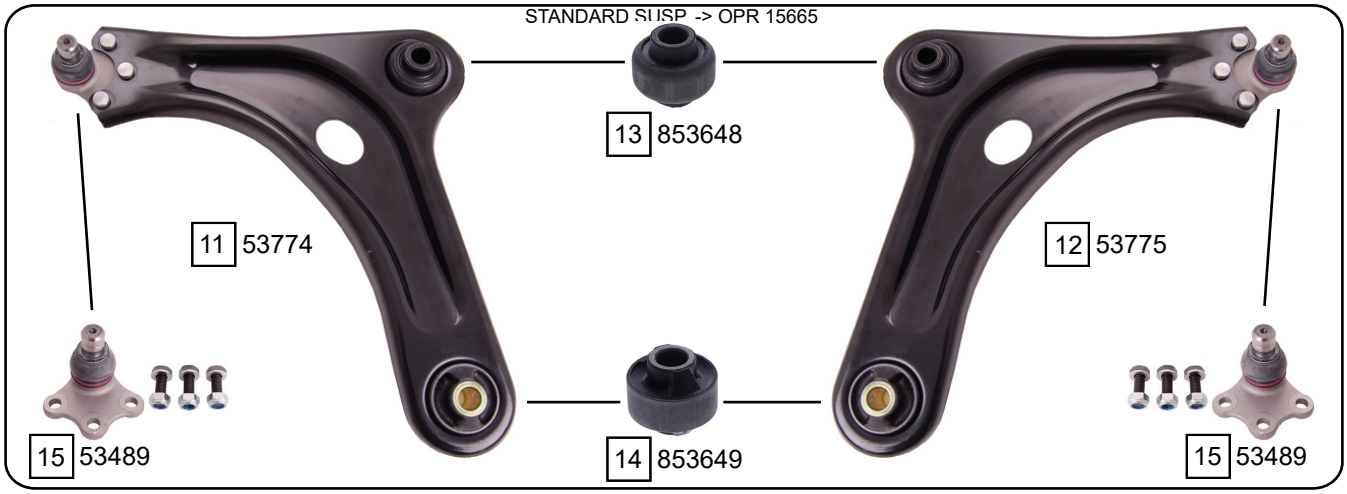

STANDARD SUSP. OPR 15666 ->

Ref.	Sidem Ref.	Description	OE-number	Measures	Ref.	Sidem Ref.	Description	OE-number	Measures
1	853837	stabiliser mounting	5094 C2	di:16.5	10	53212	axial joint	16 231 408 80	th:MM14X125R L:230
2	53060	stabiliser link	5087 59	L:336	11	53774	TCA left wbj	96 707 720 80	c:18
3	53066	stabiliser link left	5087 69	L:330	12	53775	TCA right wbj	96 707 714 80	c:18
4	53067	stabiliser link right	5087 68	L:330	13	853648	silentblock for TCA	3523 EA	di:18 do:55.3 (*)
5	853420	bearing	5035 27	di:65 do:99.5 L:20	14	853649	silentblock for TCA	3523 EE	di:18 do:55.3 (*)
6	853448	strut mount	5033 C3	di:33 do:106 L:47	15	53489	ball joint	3640 78	c:18
7	306.335	steering rack gaiter	4066 97	D:53 d:13 L:192	16	53474	TCA left wbj	3520 W8	c:18
8	53732	tie rod end left	16 231 410 80	c:12.2 th:FM14X1.5R	17	53475	TCA right wbj	3521 T0	c:18
9	53733	tie rod end right	16 231 411 80	c:12.2 th:FM14.X1.5R	18	53586	ball joint	3640 77	c:18

Copyright 2021

CITROEN
C3

C3 III (SX) 07/2016 ->

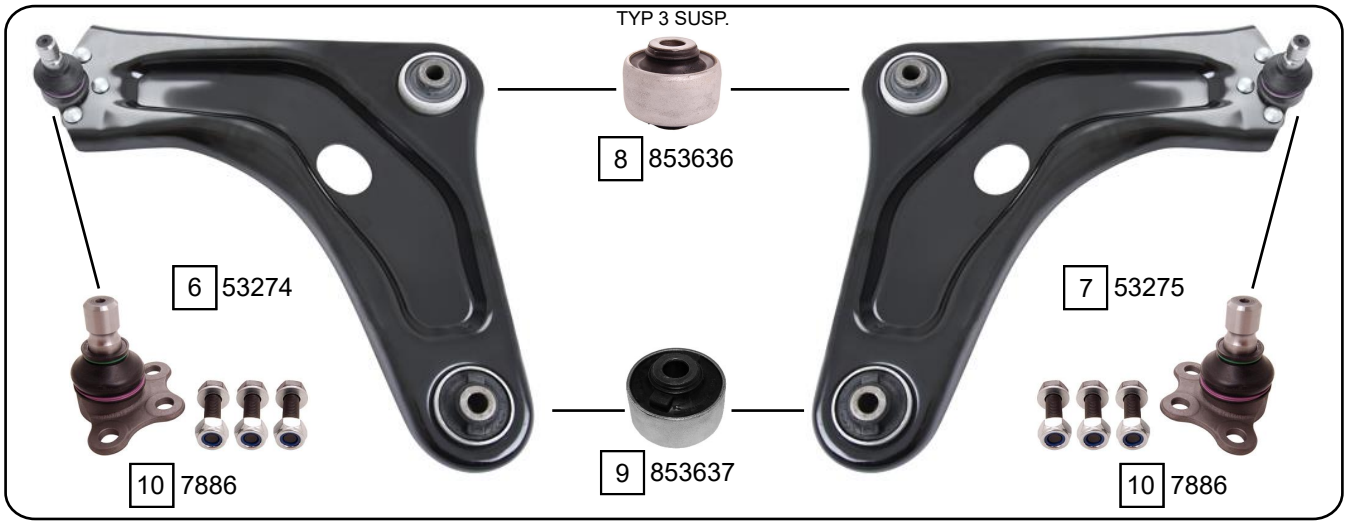

Ref.	Sidem Ref.	Description	OE-number	Measures	Ref.	Sidem Ref.	Description	OE-number	Measures
1	53876	TCA left wbj	98 032 865 80	c:18	7	53275	TCA right wbj	98 105 881 80	c:18
2	53877	TCA right wbj	98 032 864 80	c:18	8	853636	silentblock for TCA	3523 CE	di:14.2 do:56.5 (*)
3	853648	silentblock for TCA	3523 EA	di:18 do:55.3 (*)	9	853637	silentblock for TCA	3523 CC	di:14.2 do:56.5 (*)
4	853654	silentblock for TCA	Part of	di:18 do:55.3 (*)	10	7886	ball joint	3640 65	c:18
5	53586	ball joint	3640 77	c:18	11	807303	mounting axle body	5131 H4	di:12.2 do:72
6	53274	TCA left wbj	3520 R7	c:18					

Copyright 2021

C3 AIRCROSS (A88) 06/2017 ->

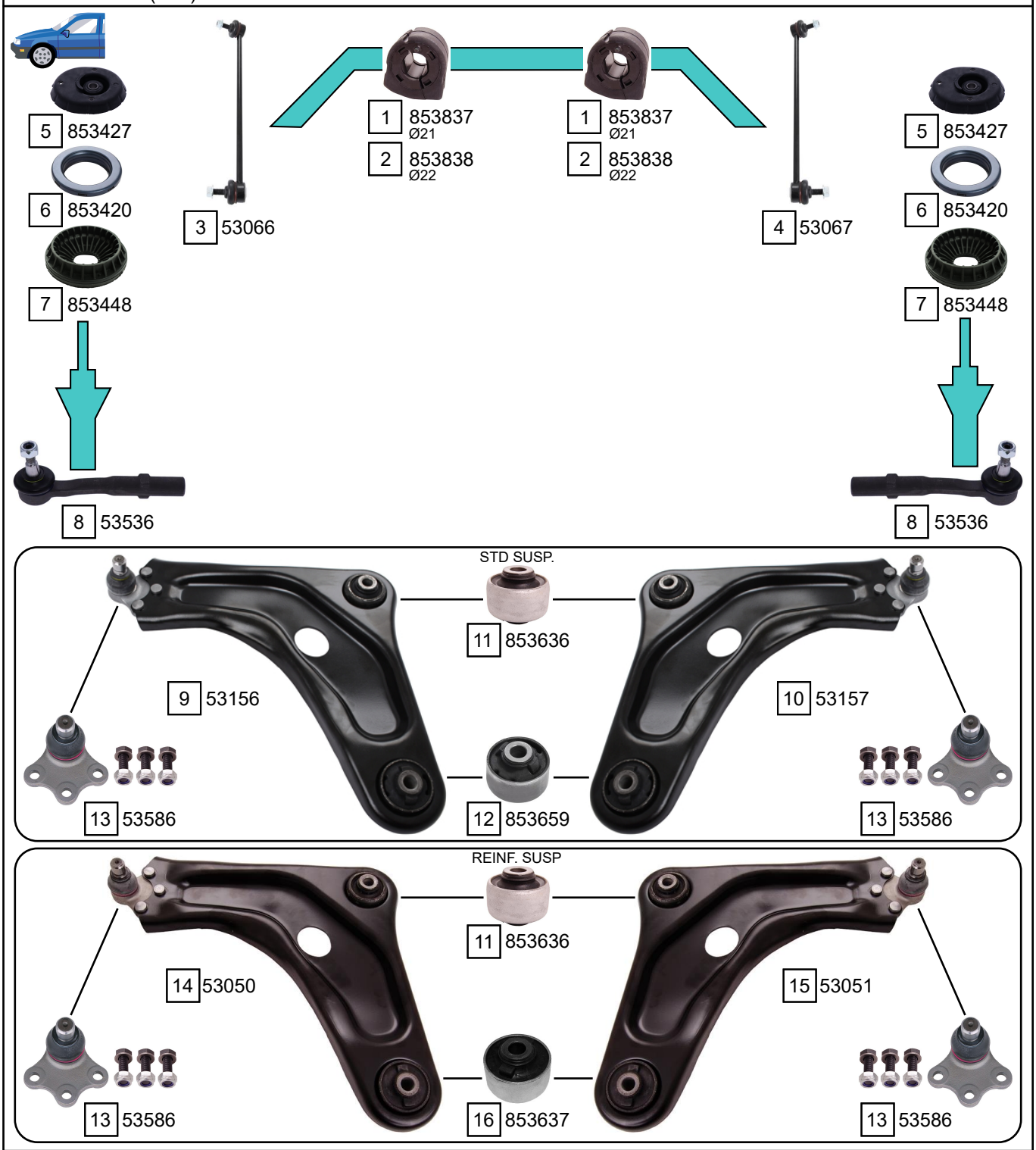

Ref.	Sidem Ref.	Description	OE-number	Measures	Ref.	Sidem Ref.	Description	OE-number	Measures
1	853837	stabiliser mounting	5094 C2	di:16.5	10	53157	TCA right wbj	98 194 182 80	c:18
2	853838	stabiliser mounting	5094 C3	di:17	11	853636	silentblock for TCA	3523 CE	di:14.2 do:56.5 (*)
3	53066	stabiliser link left	5087 69	L:330	12	853659	silentblock for TCA	Part of	di:14.2 do:56.5 (*)
4	53067	stabiliser link right	5087 68	L:330	13	53586	ball joint	3640 77	c:18
5	853427	strut mount	5038 G6	di:14.3 do:66.5 L:28.5	14	53050	TCA left wbj	96 750 318 80	c:18
6	853420	bearing	5035 27	di:65 do:99.5 L:20	15	53051	TCA right wbj	96 750 288 80	c:18
7	853448	strut mount	5033 C3	di:33 do:106 L:47	16	853637	silentblock for TCA	3523 CC	di:14.2 do:56.5 (*)
8	53536	tie rod end	Part of	c:12.5 th:FM14X1.5R	17	807303	mounting axle body	5131 H4	di:12.2 do:72
9	53156	TCA left wbj	98 194 181 80	c:18					

Copyright 2021

CITROEN
C3 PICASSO

C3 PICASSO 02/2009 ->

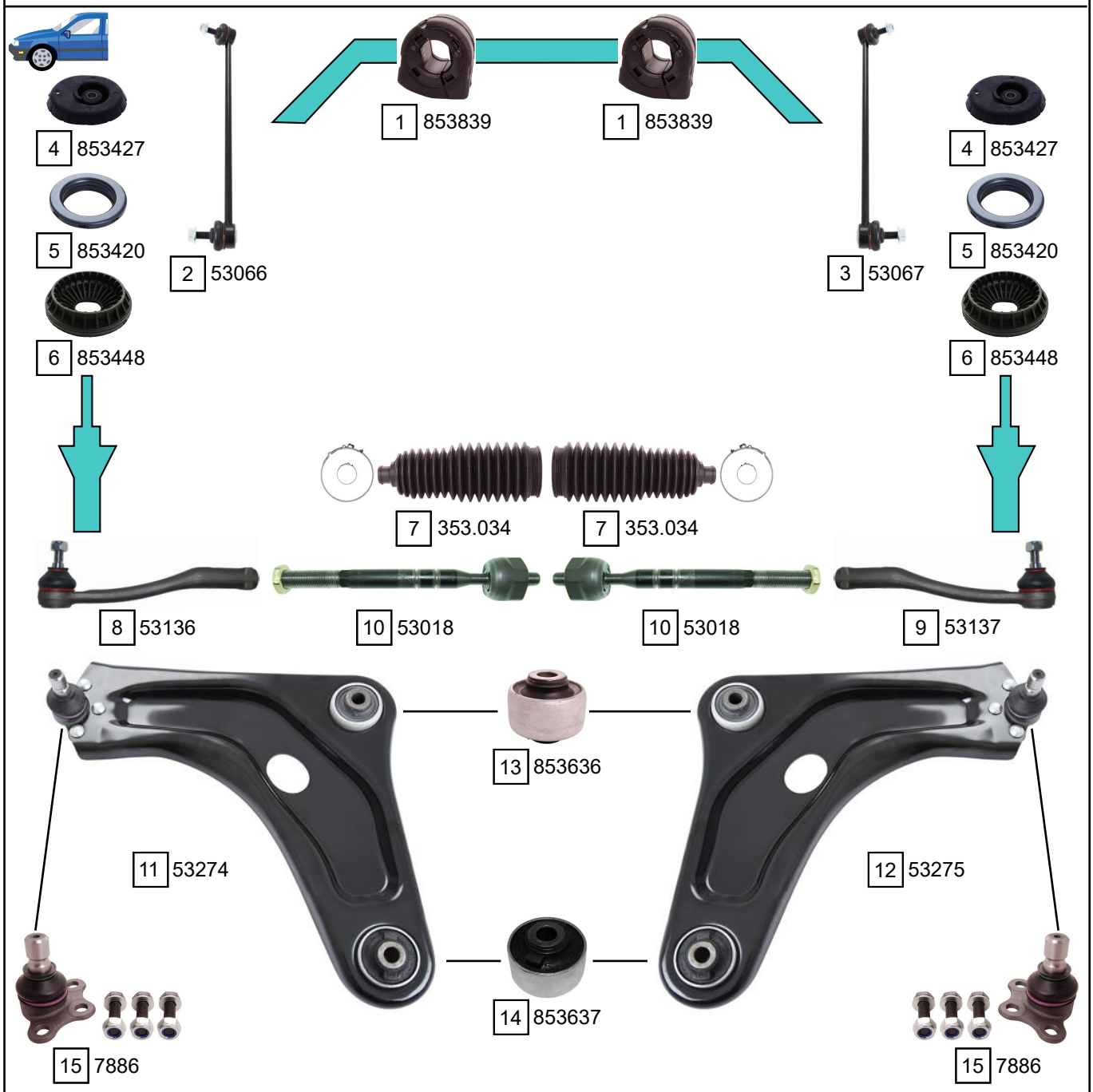

Ref.	Sidem Ref.	Description	OE-number	Measures	Ref.	Sidem Ref.	Description	OE-number	Measures
1	853839	stabiliser mounting	5094 C5	di:23	10	53018	axial joint	3812 E8	th:MM12X1R L:212
2	53066	stabiliser link left	5087 69	L:330	11	53274	TCA left wbj	3520 R7	c:18
3	53067	stabiliser link right	5087 68	L:330	12	53275	TCA right wbj	98 105 881 80	c:18
4	853427	strut mount	5038 G6	di:14.3 do:66.5 L:28.5	13	853636	silentblock for TCA	3523 CE	di:14.2 do:56.5 (*)
5	853420	bearing	5035 27	di:65 do:99.5 L:20	14	853637	silentblock for TCA	3523 CC	di:14.2 do:56.5 (*)
6	853448	strut mount	5033 C3	di:33 do:106 L:47	15	7886	ball joint	3640 65	c:18
7	353.034	steering rack gaiter	4066 80	D:51 d:15.5 L:185	16	807303	mounting axle body	5131 H4	di:12.2 do:72
8	53136	tie rod end left	3817 67	c:12.1 th:FM16X1.5R	17	807304	mounting axle body	5131 E9	di:12.2 do:72
9	53137	tie rod end right	3817 68	c:12.1 th:FM16X1.5R					

Copyright 2021

C3 PLURIEL (HB_) 05/2003 - 07/2010

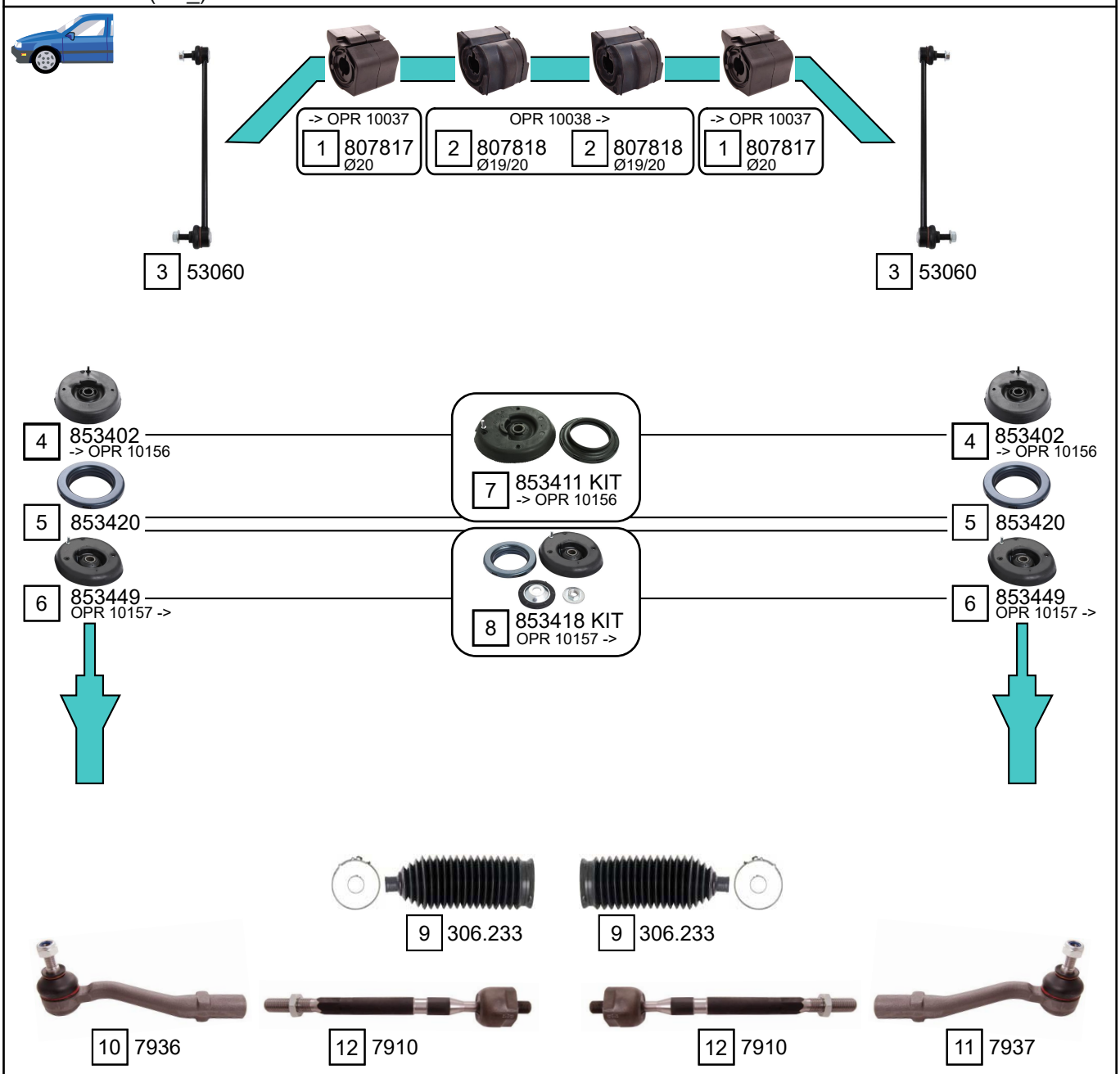

Ref.	Sidem Ref.	Description	OE-number	Measures	Ref.	Sidem Ref.	Description	OE-number	Measures
1	807817	stabiliser mounting	5094 96	di:20	7	853411 KIT	strut mount kit	5031 80	di:14.2 do:122 L:42
2	807818	stabiliser mounting	5094 A6	di:19.5	8	853418 KIT	strut mount kit	5031 96	di:14.2
3	53060	stabiliser link	5087 59	L:336	9	306.233	steering rack gaiter	4066 69	D:50 d:14 L:165
4	853402	strut mount	5038 91	di:14.3 L:34	10	7936	tie rod end left	3817 55	c:12.2 th:FM14X1.5R
5	853420	bearing	5035 27	di:65 do:99.5 L:20	11	7937	tie rod end right	3817 56	c:12.2 th:FM14X1.5R
6	853449	strut mount	5038 F5	di:14.2	12	7910	axial joint	3812 E1	th:MM12X1R L:235.5

Copyright 2021

CITROEN
C3 PLURIEL

C3 PLURIEL (HB_) 05/2003 - 07/2010

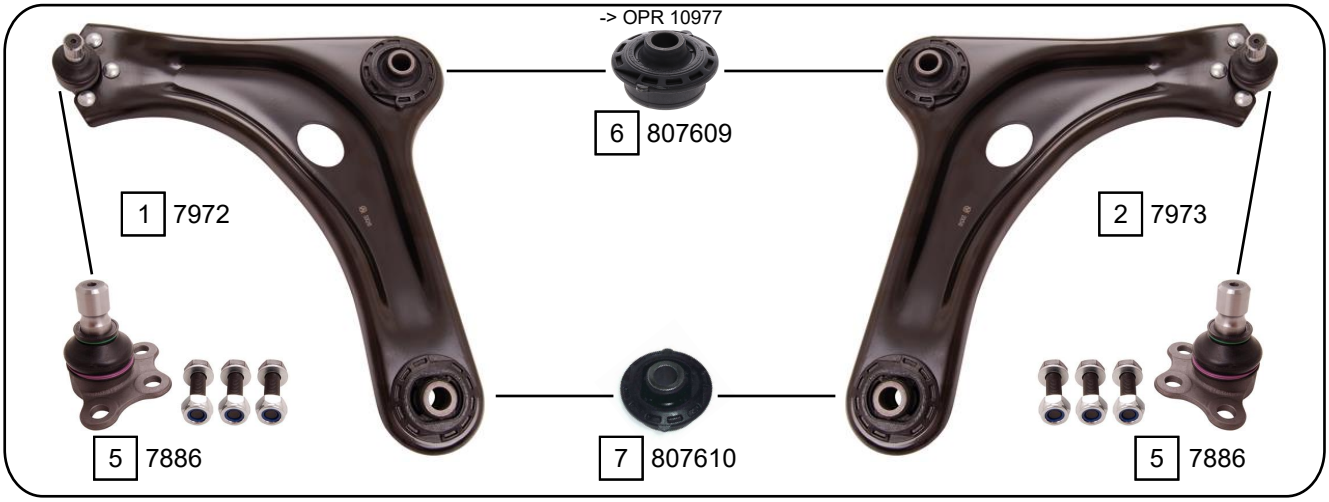

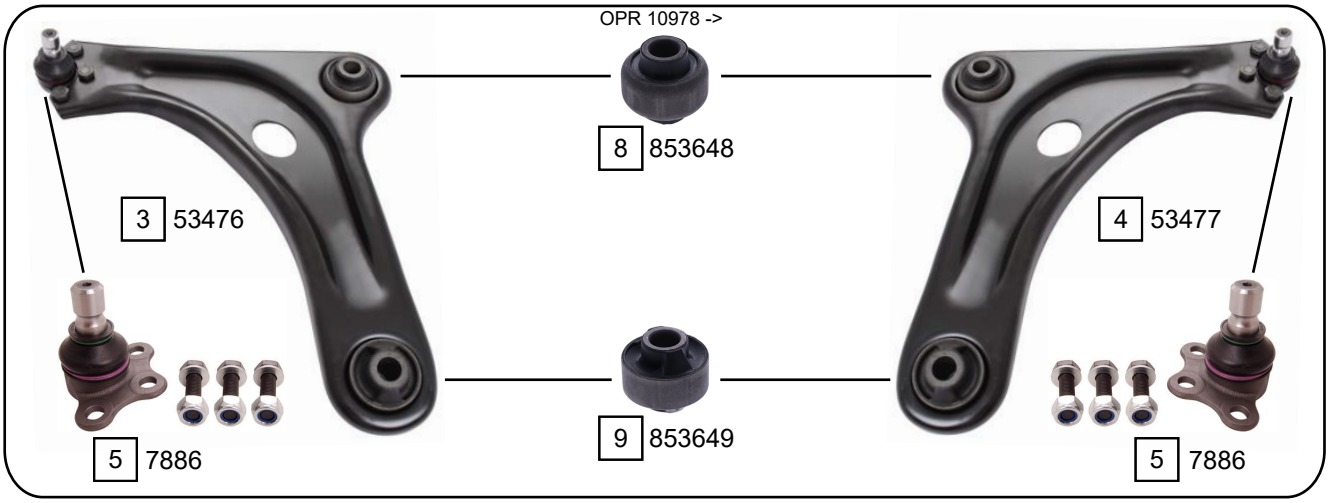

Ref.	Sidem Ref.	Description	OE-number	Measures	Ref.	Sidem Ref.	Description	OE-number	Measures
1	7972	TCA left wbj	3520 L4	c:18	6	807609	silentblock for TCA	3523 98	di:18 do:56 (*)
2	7973	TCA right wbj	3521 H6	c:18	7	807610	silentblock for TCA	3523 AA	di:18 do:56 (*)
3	53476	TCA left wbj	3520 T5	c:18	8	853648	silentblock for TCA	3523 EA	di:18 do:55.3 (*)
4	53477	TCA right wbj	3521 Q6	c:18	9	853649	silentblock for TCA	3523 EE	di:18 do:55.3 (*)
5	7886	ball joint	3640 65	c:18	10	807307	mounting axle body	5131 C2	di:12.5 do:60.5

Copyright 2021

C4 (LC_)
C4 COUPE (LA_)

11/2004 - 07/2011

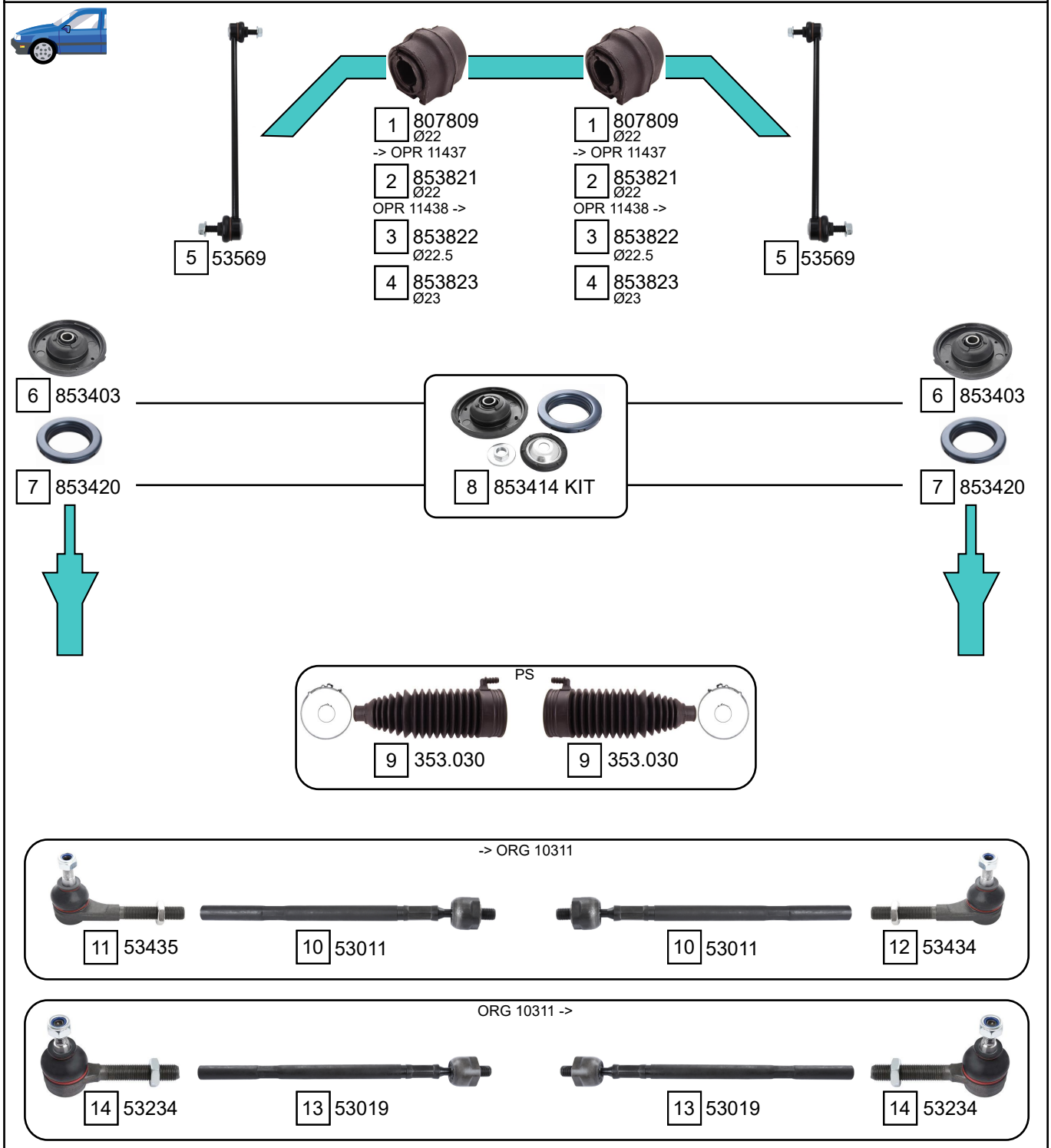

Ref.	Sidem Ref.	Description	OE-number	Measures	Ref.	Sidem Ref.	Description	OE-number	Measures
1	807809	stabiliser mounting	5094 88	di:22	8	853414 KIT	strut mount kit	5038 G0 S1	di:14.5 do:119 L:29.5
2	853821	stabiliser mounting	5094 E0	di:21	9	353.030	steering rack gaiter	4066 73	D:60 d:17 L:185
3	853822	stabiliser mounting	5094 E2	di:21,5	10	53011	axial joint	3812 E0	th:MM14X1.5R L:322
4	853823	stabiliser mounting	5094 E3	di:22.5	11	53435	tie rod end	3817 42	c:12.1 th:MM14x1.5R
5	53569	stabiliser link	5087 77	L:335	12	53434	tie rod end	3817 41	c:12.1 th:MM14x1.5R
6	853403	strut mount	5038 G0	di:14.5 do:119 L:29.5	13	53019	axial joint	3812 E5	th:MM14X1.5R L:343
7	853420	bearing	5035 27	di:65 do:99.5 L:20	14	53234	tie rod end	3817 50	c:12 th:MM14X1.5R

Copyright 2021

CITROEN
C4

C4 (LC_)
C4 COUPE (LA_)

11/2004 - 07/2011

-> ORG 10884 / EXC. COUPE

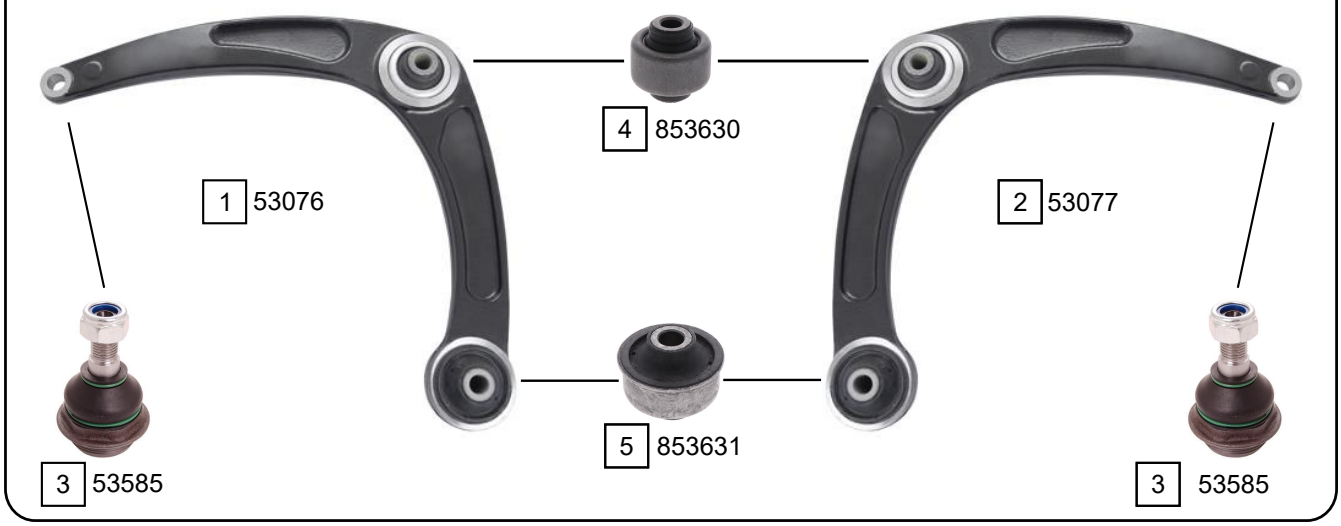

ORG 10885 -> / COUPE ALL

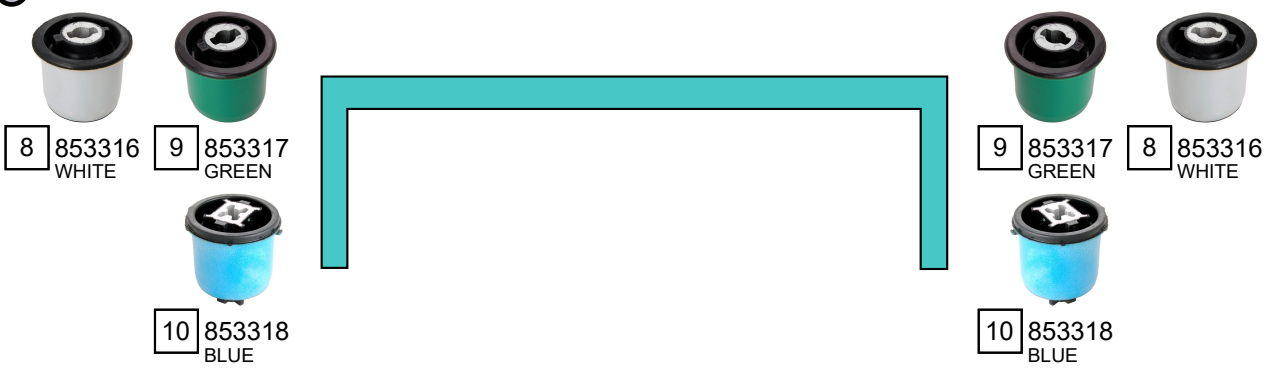

Ref.	Sidem Ref.	Description	OE-number	Measures	Ref.	Sidem Ref.	Description	OE-number	Measures
1	53076	TCA left wobj	3520 P3	c:15.3	6	53270	TCA left wobj	3520 S2	c:15.2
2	53077	TCA right wobj	3521 K3	c:15.3	7	53271	TCA right wobj	3521 P3	c:15.2
3	53585	ball joint	3640 68	c:15.7	8	853316	mounting axle body	5131 A4	di:16.7 do:71.5
4	853630	silentblock for TCA	3523 91	di:14.1 do:55.2 (*)	9	853317	mounting axle body	5131 A5	di:16.7 do:72.5
5	853631	silentblock for TCA	3523 92	di:14.2 do:55.3 (*)	10	853318	mounting axle body	5131 G4	di:12.1 do:71

Copyright 2021

C4 (B7) 11/2009 ->

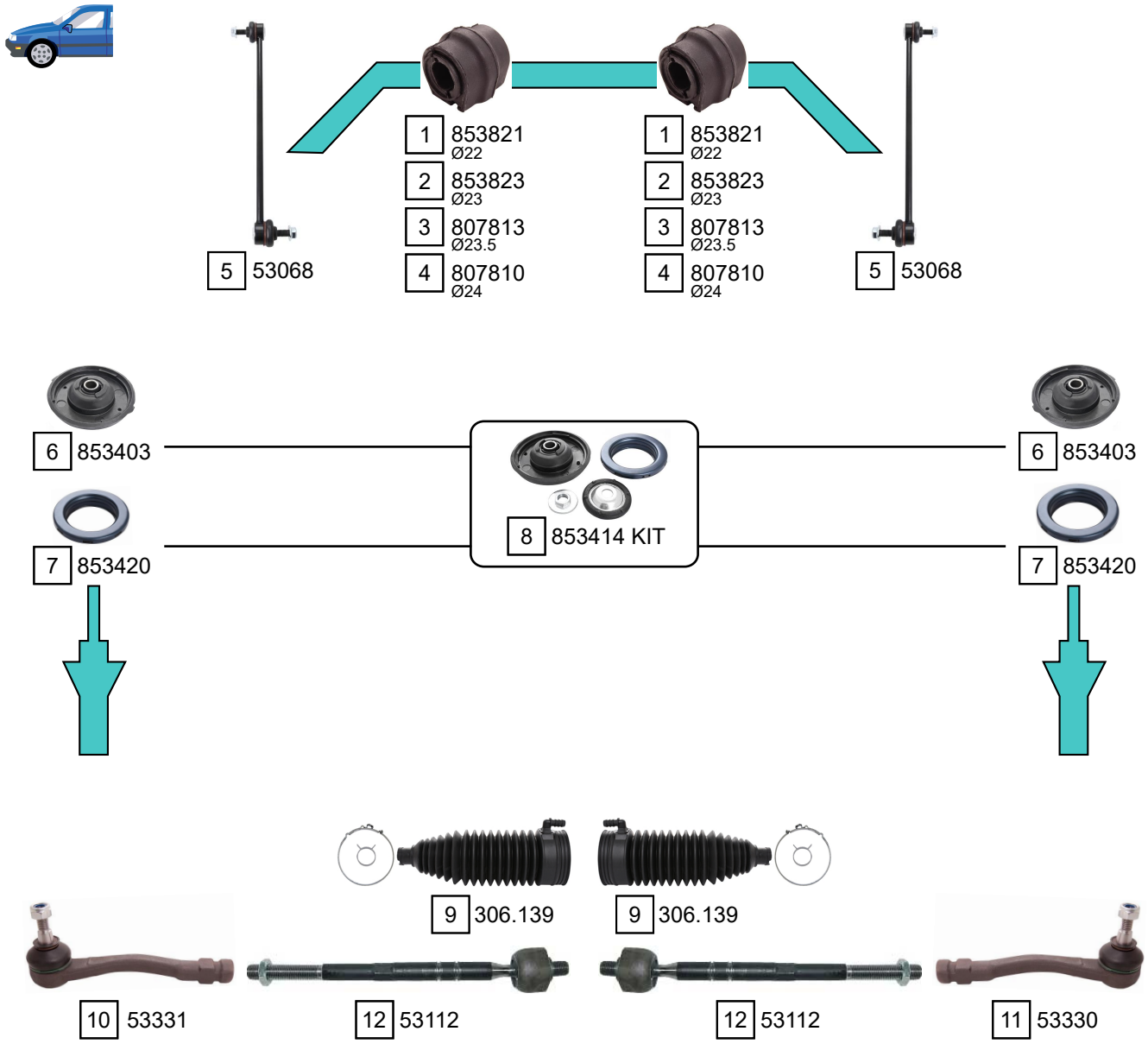

Ref.	Sidem Ref.	Description	OE-number	Measures	Ref.	Sidem Ref.	Description	OE-number	Measures
1	853821	stabiliser mounting	5094 E0	di:21	7	853420	bearing	5035 27	di:65 do:99.5 L:20
2	853823	stabiliser mounting	5094 E3	di:22.5	8	853414 KIT	strut mount kit	5038 G0 S1	di:14.5 do:119 L:29.5
3	807813	stabiliser mounting	5094 F2	di:22	9	306.139	steering rack gaiter	4066 85	D:61 d:15.5 L:190
4	807810	stabiliser mounting	5094 E4	di:23	10	53331	tie rod end left	3817 89	c:12 th:FM14x1.5R
5	53068	stabiliser link	98 090 457 80	L:335	11	53330	tie rod end right	3817 88	c:12 th:FM14x1.5R
6	853403	strut mount	5038 G0	di:14.5 do:119 L:29.5	12	53112	axial joint	3812 F2	th:MM14x1.5R L:277

Copyright 2021

CITROEN
C4

C4 (B7) 11/2009 ->

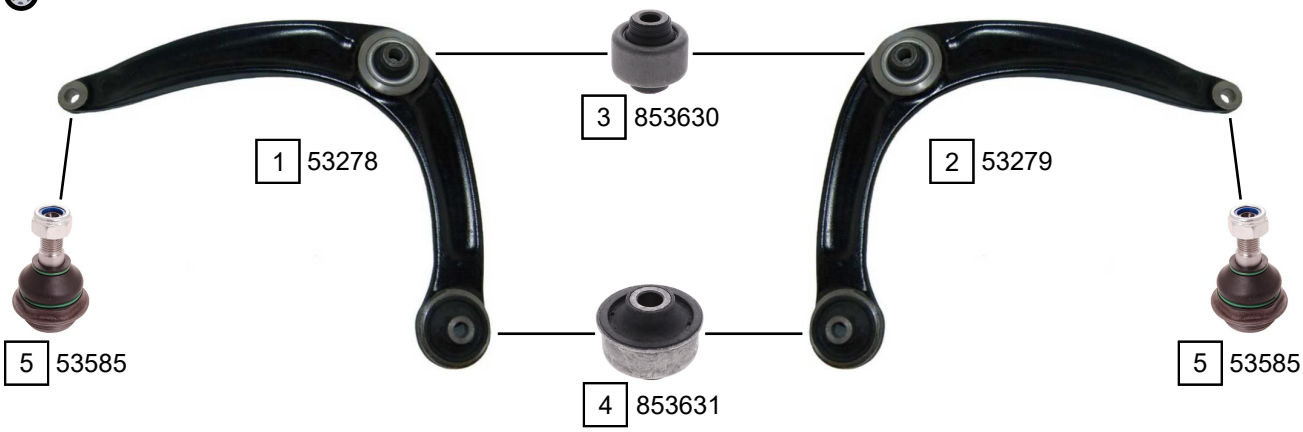

OPR 13370 ->

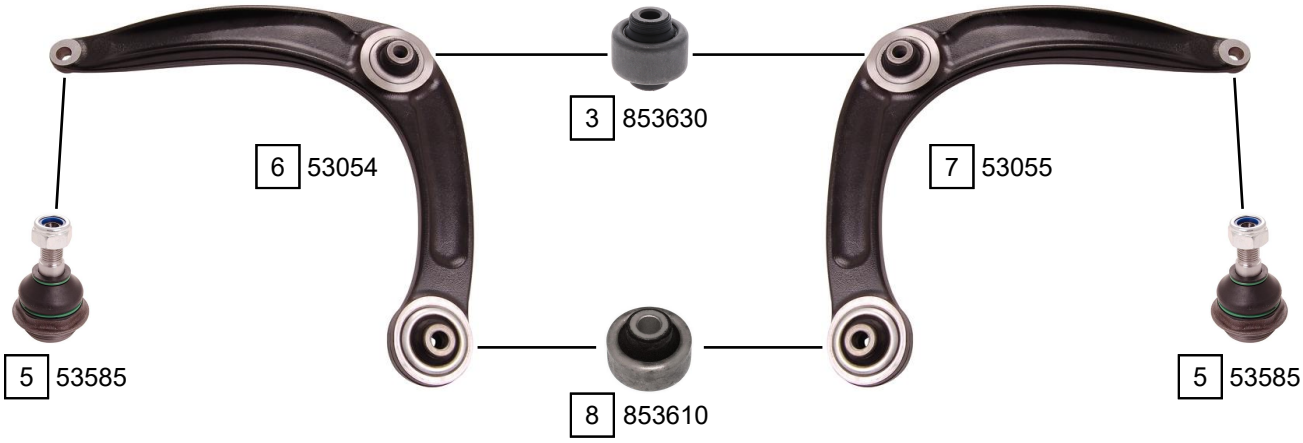

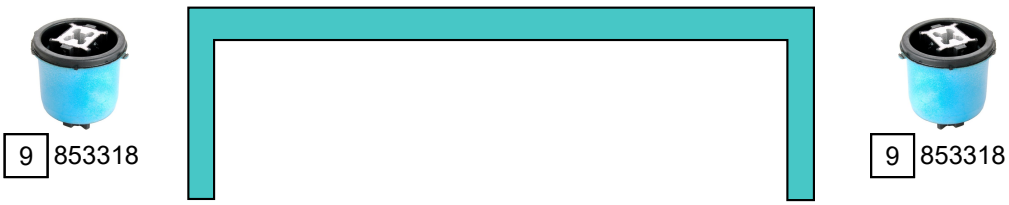

Ref.	Sidem Ref.	Description	OE-number	Measures	Ref.	Sidem Ref.	Description	OE-number	Measures
1	53278	TCA left wobj	3520 V2	c:15.2	6	53054	TCA left wobj	98 056 074 80	c:15.2
2	53279	TCA right wobj	3521 R3	c:15.2	7	53055	TCA right wobj	98 056 073 80	c:15.2
3	853630	silentblock for TCA	3523 91	di:14.1 do:55.2 (*)	8	853610	silentblock for TCA	3523 76	di:14.2 do:55.3 (*)
4	853631	silentblock for TCA	3523 92	di:14.2 do:55.3 (*)	9	853318	mounting axle body	5131 G4	di:12.1 do:71
5	53585	ball joint	3640 68	c:15.7					

Copyright 2021

C4 AIRCROSS 05/2012 ->

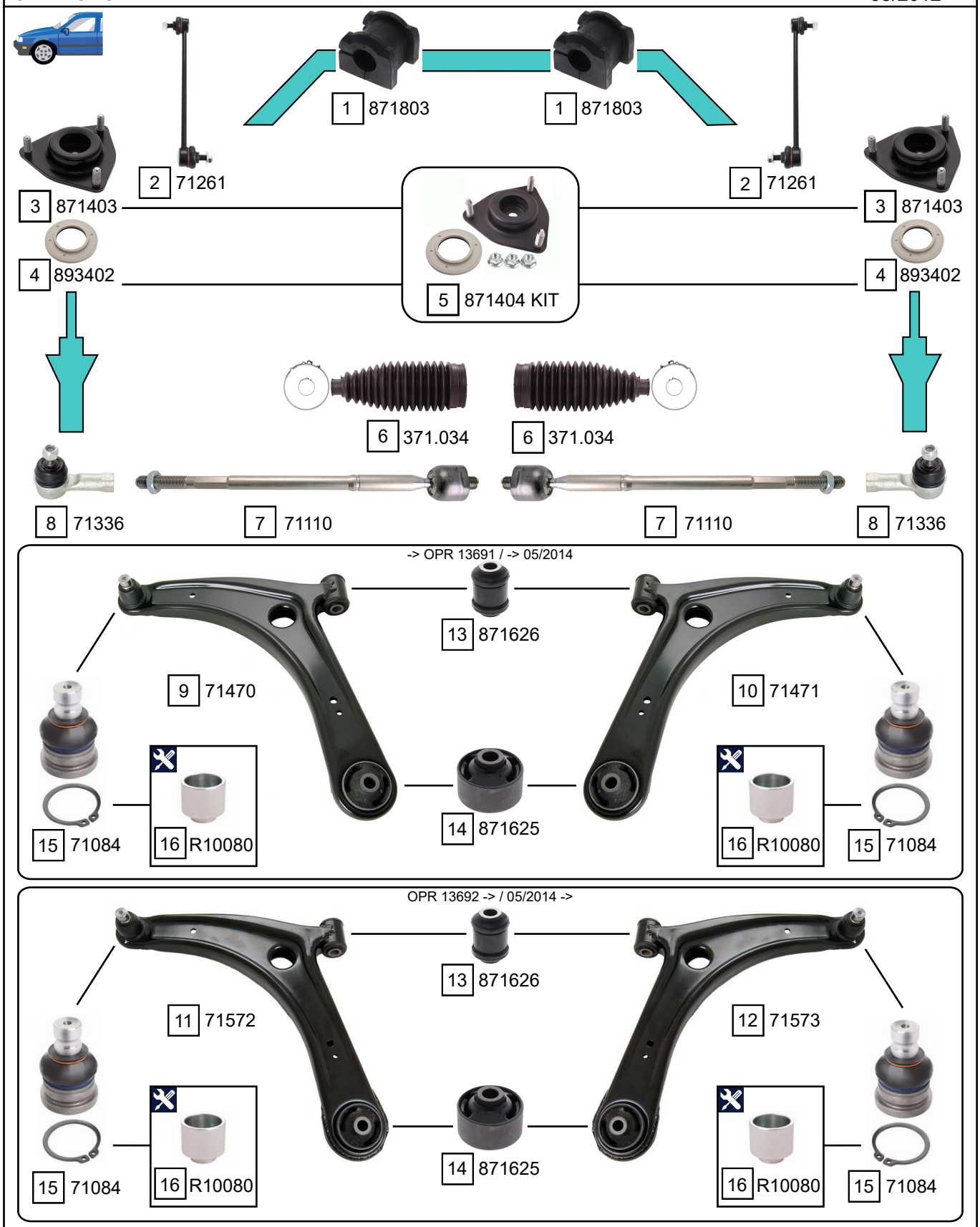

Ref.	Sidem Ref.	Description	OE-number	Measures	Ref.	Sidem Ref.	Description	OE-number	Measures
1	871803	stabiliser mounting	5094 C6	di:22	9	71470	TCA left wbj	16 124 483 80	c:20
2	71261	stabiliser link	5087 58	L:265	10	71471	TCA right wbj	16 124 484 80	c:20
3	871403	strut mount	5038 F8	di:12.4 L:32.5	11	71572	TCA left wbj	16 127 533 80	c:20
4	893402	bearing	5033 C4	di:36.1 do:64 L:9	12	71573	TCA right wbj	16 127 535 80	c:20
5	871404 KIT	strut mount kit	5038 F8 S1	di:12.4 L:37	13	871626	silentblock for TCA	Part of	di:14.1 do:37 (*)
6	371.034	steering rack gaiter	Part of	D:51 d:14 L:166	14	871625	silentblock for TCA	3523 CS	di:14.1 do:60 (*)
7	71110	axial joint	Part of	th:MM14X1.5R L:339	15	71084	ball joint	Part of	c:20 do:40.1
8	71336	tie rod end	16 075 024 80	c:13.3 th:FM14X1.5R	16	R10080	mounting tool ring ø48 ø40	SEE PAGE III	di:40 do:48

Copyright 2021

CITROEN
C4 AIRCROSS

C4 AIRCROSS 05/2012 ->

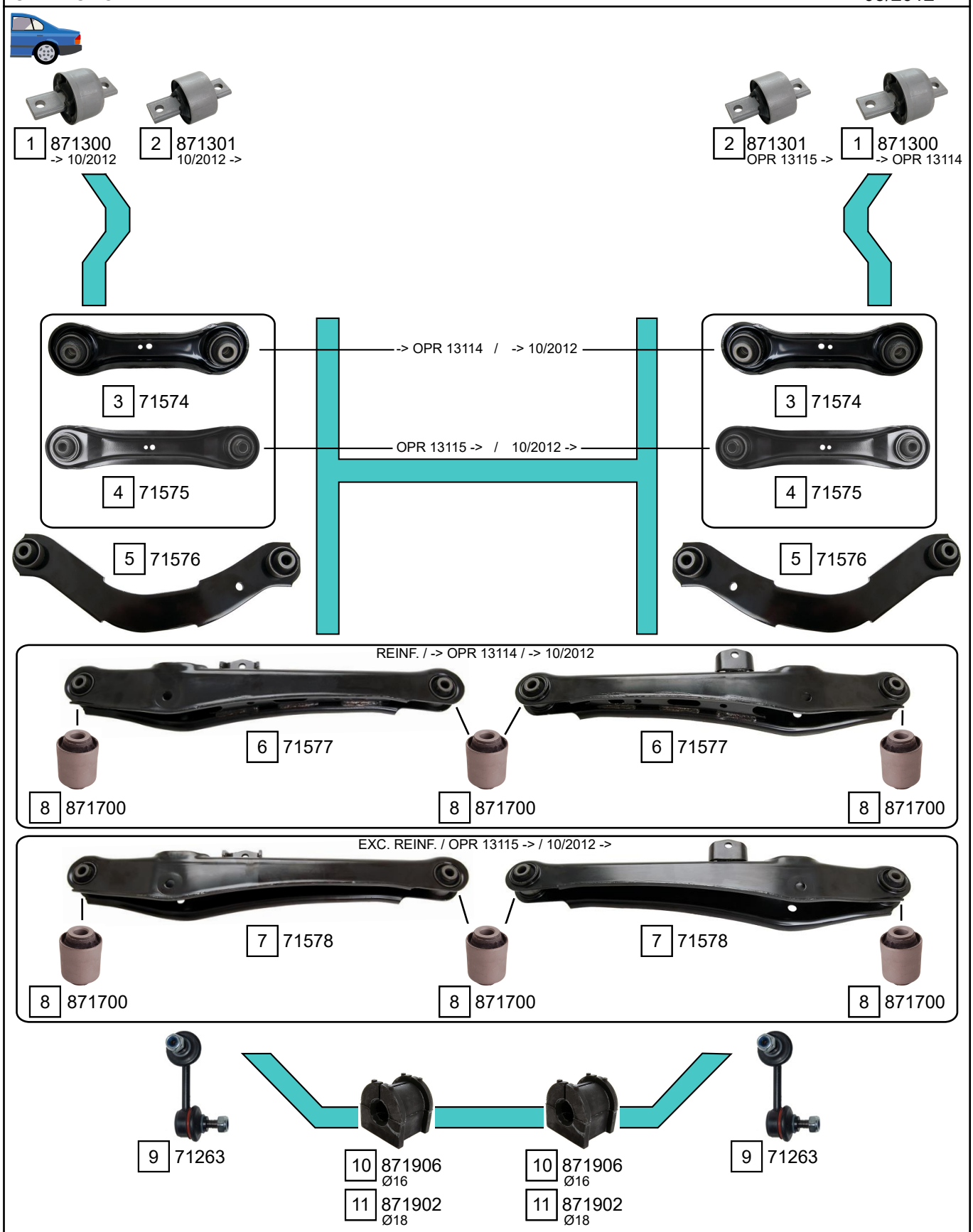

Ref.	Sidem Ref.	Description	OE-number	Measures	Ref.	Sidem Ref.	Description	OE-number	Measures
1	871300	mounting axle body	16 118 561 80	do:70	7	71578	TCA	16 099 110 80	L:505
2	871301	mounting axle body	16 099 117 80	do:70	8	871700	silentblock for TCA	16 099 120 80	di:12.2 do:35.7 (*)
3	71574	track rod	16 074 987 80	L:165	9	71263	stabiliser link right	5178 49	L:80
4	71575	track rod	16 127 547 80	L:248	10	871906	stabiliser mounting	16 099 137 80	di:15.6
5	71576	track rod	16 074 983 80	L:315	11	871902	stabiliser mounting	16 074 990 80	di:17.5
6	71577	TCA	16 062 930 80	L:505					

Copyright 2021

C4 CACTUS 06/2014 ->

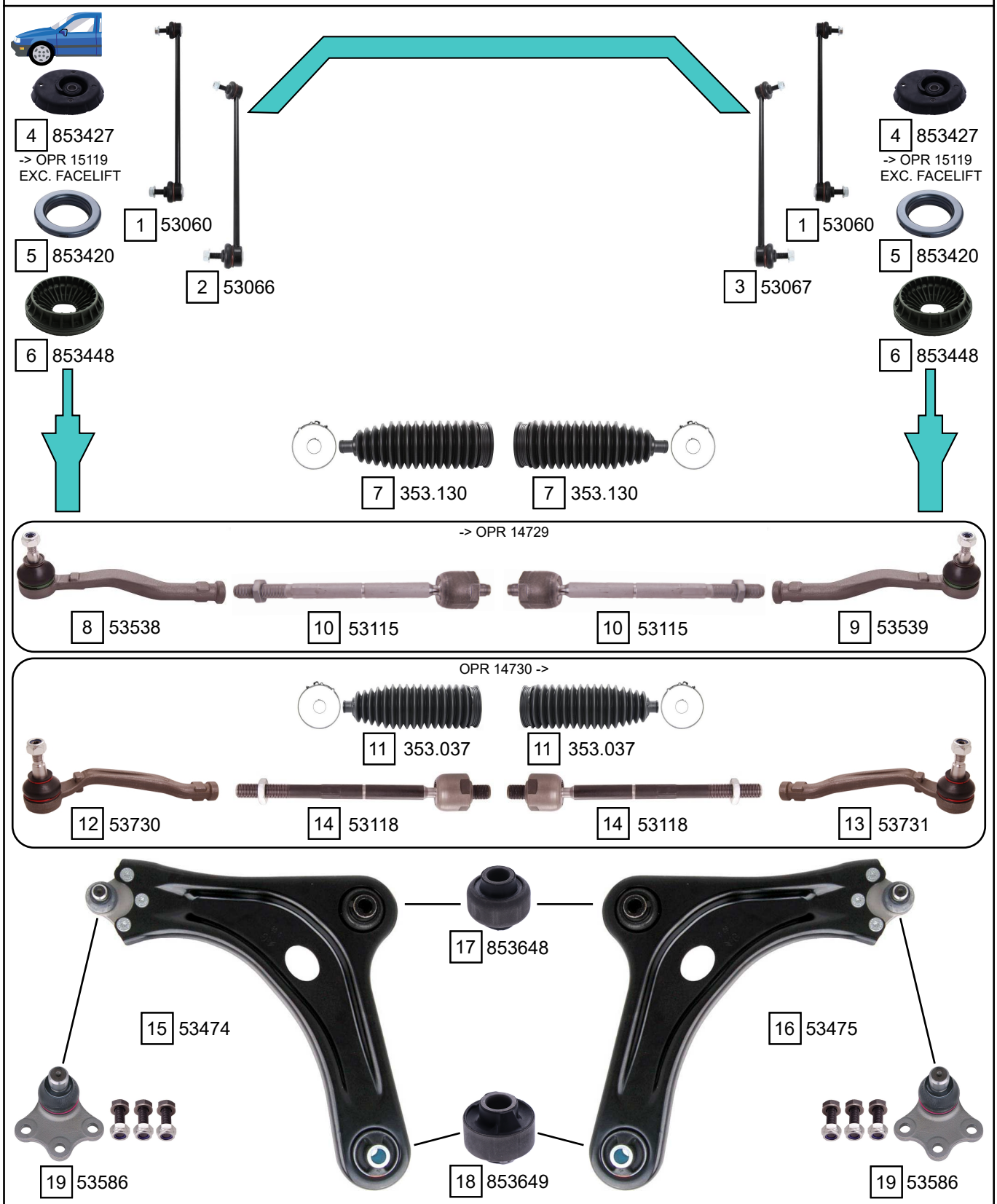

Ref.	Sidem Ref.	Description	OE-number	Measures	Ref.	Sidem Ref.	Description	OE-number	Measures
1	53060	stabiliser link	5087 59	L:336	11	353.037	steering rack gaiter	16 108 175 80	D:51 d:12 L:186
2	53066	stabiliser link left	5087 69	L:330	12	53730	tie rod end left	16 108 177 80	c:14.5 th:FM14X1.5R
3	53067	stabiliser link right	5087 68	L:330	13	53731	tie rod end right	16 108 178 80	c:14.5 th:FM14X1.5R
4	853427	strut mount	5038 G6	di:14.3 do:66.5 L:28.5	14	53118	axial joint	16 108 176 80	th:MM14x1.5R L:225
5	853420	bearing	5035 27	di:65 do:99.5 L:20	15	53474	TCA left wbj	3520 W8	c:18
6	853448	strut mount	5033 C3	di:33 do:106 L:47	16	53475	TCA right wbj	3521 T0	c:18
7	353.130	steering rack gaiter	16 080 254 80	D:51.5 d:12.5 L:198	17	853648	silentblock for TCA	3523 EA	di:18 do:55.3 (*)
8	53538	tie rod end left	16 080 251 80	c:12.1 th:FM14X1.5R	18	853649	silentblock for TCA	3523 EE	di:18 do:55.3 (*)
9	53539	tie rod end right	16 080 252 80	c:12.1 th:FM14X1.5R	19	53586	ball joint	3640 77	c:18
10	53115	axial joint	16 080 253 80	th:MM12X1R L:225					

Copyright 2021

CITROEN
C4 CACTUS

C4 CACTUS 06/2014 ->

Ref.	Sidem Ref.	Description	OE-number	Measures	Ref.	Sidem Ref.	Description	OE-number	Measures
1	53876	TCA left wbj	98 032 865 80	c:18	7	53275	TCA right wbj	98 105 881 80	c:18
2	53877	TCA right wbj	98 032 864 80	c:18	8	853636	silentblock for TCA	3523 CE	di:14.2 do:56.5 (*)
3	853648	silentblock for TCA	3523 EA	di:18 do:55.3 (*)	9	853637	silentblock for TCA	3523 CC	di:14.2 do:56.5 (*)
4	853654	silentblock for TCA	Part of	di:18 do:55.3 (*)	10	7886	ball joint	3640 65	c:18
5	53586	ball joint	3640 77	c:18	11	807303	mounting axle body	5131 H4	di:12.2 do:72
6	53274	TCA left wbj	3520 R7	c:18					

Copyright 2021

C4 PICASSO (UD_) 02/2007 - 08/2013
C4 GRAND PICASSO (UA_) 10/2006 - 08/2013

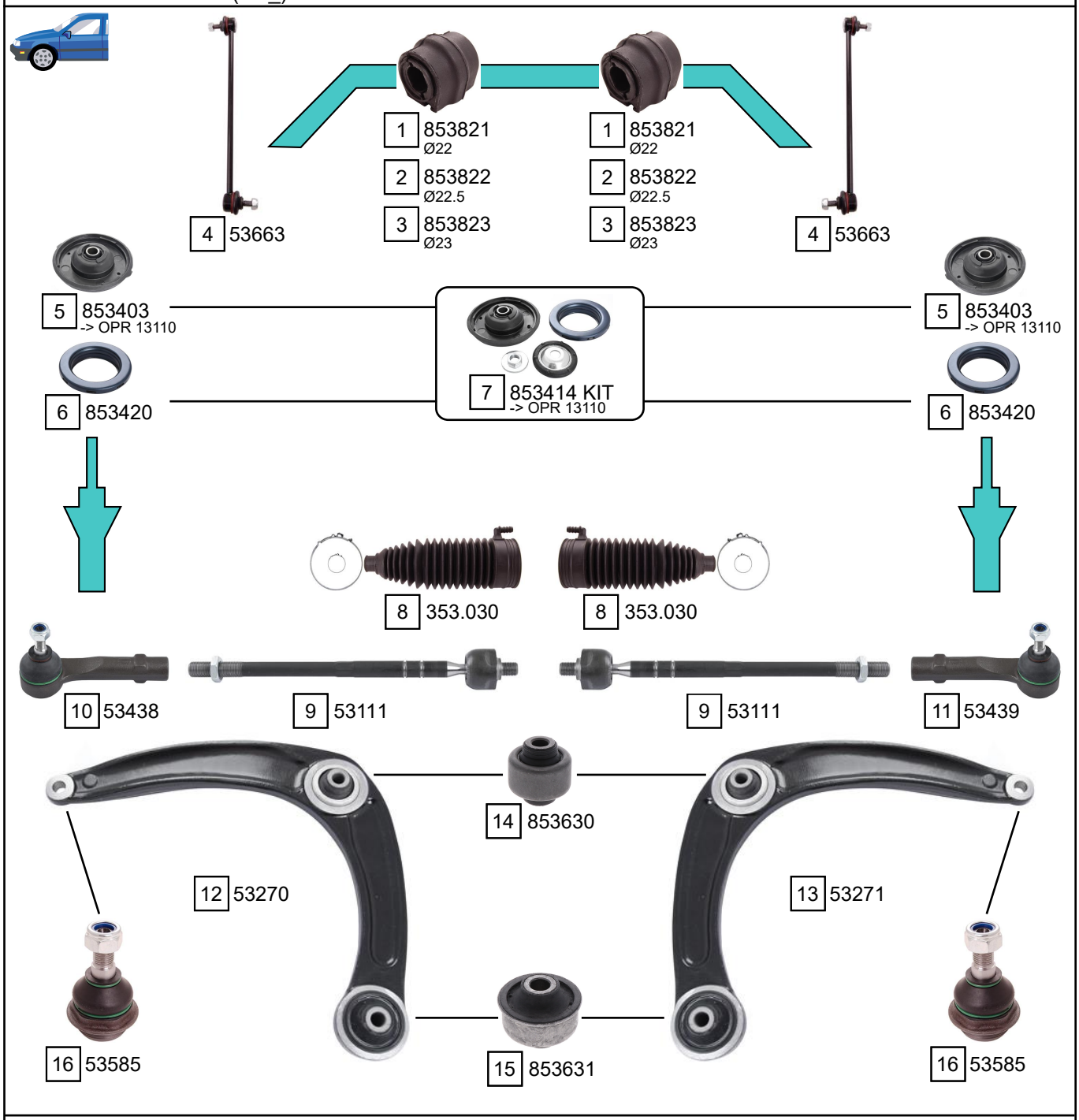

Ref.	Sidem Ref.	Description	OE-number	Measures	Ref.	Sidem Ref.	Description	OE-number	Measures
1	853821	stabiliser mounting	5094 E0	di:21	10	53438	tie rod end left	3817 71	c:12 th:FM16x1.5R
2	853822	stabiliser mounting	5094 E2	di:21,5	11	53439	tie rod end right	3817 72	c:12 th:FM16x1.5R
3	853823	stabiliser mounting	5094 E3	di:22.5	12	53270	TCA left wobj	3520 S2	c:15.2
4	53663	stabiliser link	5087 57	L:335	13	53271	TCA right wobj	3521 P3	c:15.2
5	853403	strut mount	5038 G0	di:14.5 do:119 L:29.5	14	853630	silentblock for TCA	3523 91	di:14.1 do:55.2 (*)
6	853420	bearing	5035 27	di:65 do:99.5 L:20	15	853631	silentblock for TCA	3523 92	di:14.2 do:55.3 (*)
7	853414 KIT	strut mount kit	5038 G0 S1	di:14.5 do:119 L:29.5	16	53585	ball joint	3640 68	c:15.7
8	353.030	steering rack gaiter	4066 73	D:60 d:17 L:185	17	853327	mounting axle body	98 142 118 80	di:14.2 do:81
9	53111	axial joint	3812 E9	th:MM14x1.5R L:313					

Copyright 2021

CITROEN
C4 PICASSO

C4 PICASSO II (B78) 02/2013 ->
C4 GRAND PICASSO II 09/2013 ->

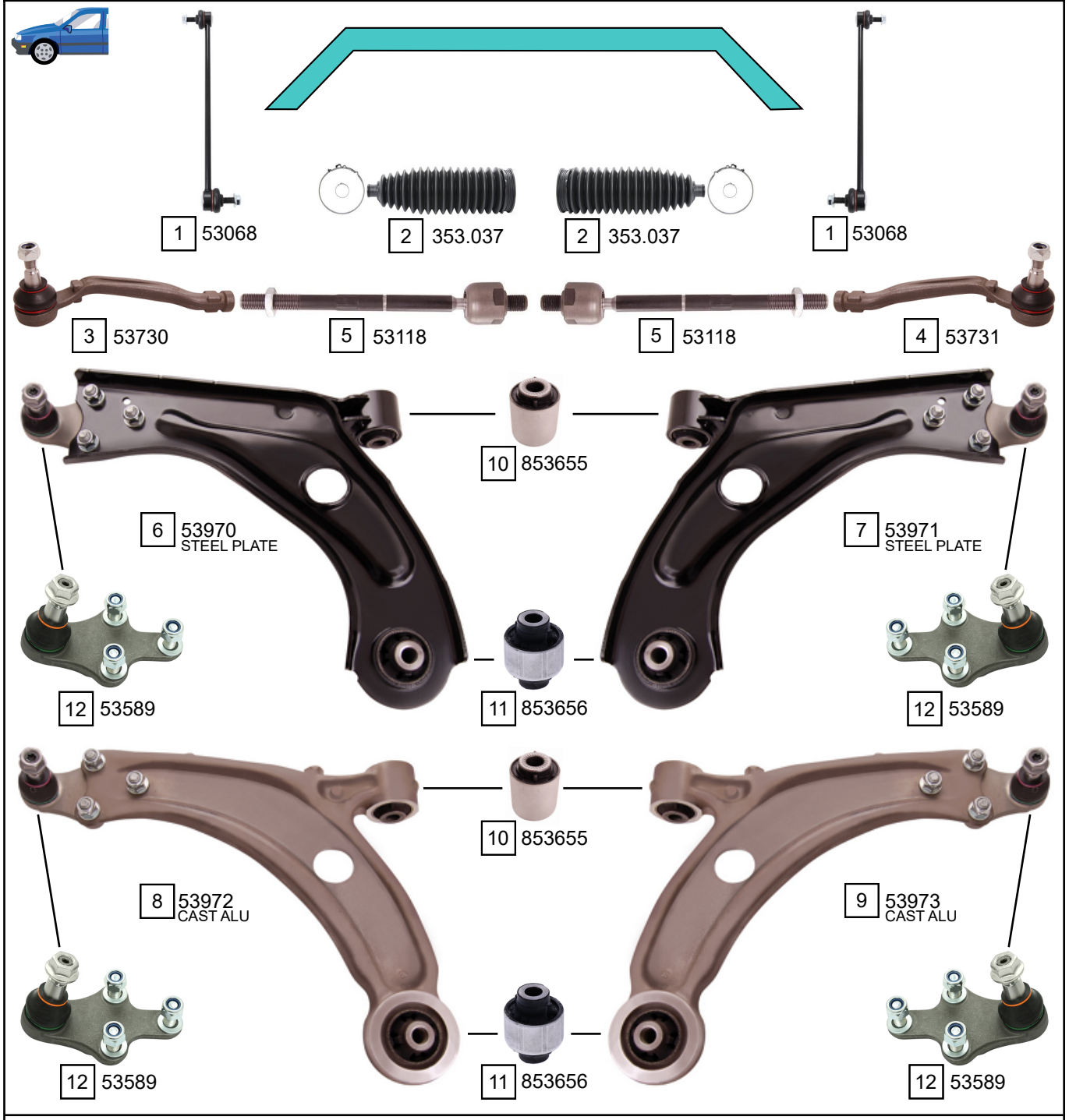

Ref.	Sidem Ref.	Description	OE-number	Measures	Ref.	Sidem Ref.	Description	OE-number	Measures
1	53068	stabiliser link	98 090 457 80	L:335	8	53972	TCA left wbj	98 005 966 80 S1	c:16.5
2	353.037	steering rack gaiter	16 108 175 80	D:51 d:12 L:186	9	53973	TCA right wbj	98 005 965 80 S1	c:16.5
3	53730	tie rod end left	16 108 177 80	c:14.5 th:FM14X1.5R	10	853655	silentblock for TCA	96 760 321 80	di:14.3 do:43.4 (*)
4	53731	tie rod end right	16 108 178 80	c:14.5 th:FM14X1.5R	11	853656	silentblock for TCA	96 760 352 80	di:14.1 do:50.3 (*)
5	53118	axial joint	16 108 176 80	th:MM14x1.5R L:225	12	53589	ball joint	98 034 340 80	c:16.5
6	53970	TCA left wbj	96 783 113 80 S1	c:16.5	13	853321	mounting axle body	98 034 811 80	do:80
7	53971	TCA right wbj	96 783 112 80 S1	c:16.5					

Copyright 2021

C4 SPACETOURER (3D_) 04/2018 ->
GRAND C4 SPACETOURER (3A_, 3E_) 04/2018 ->

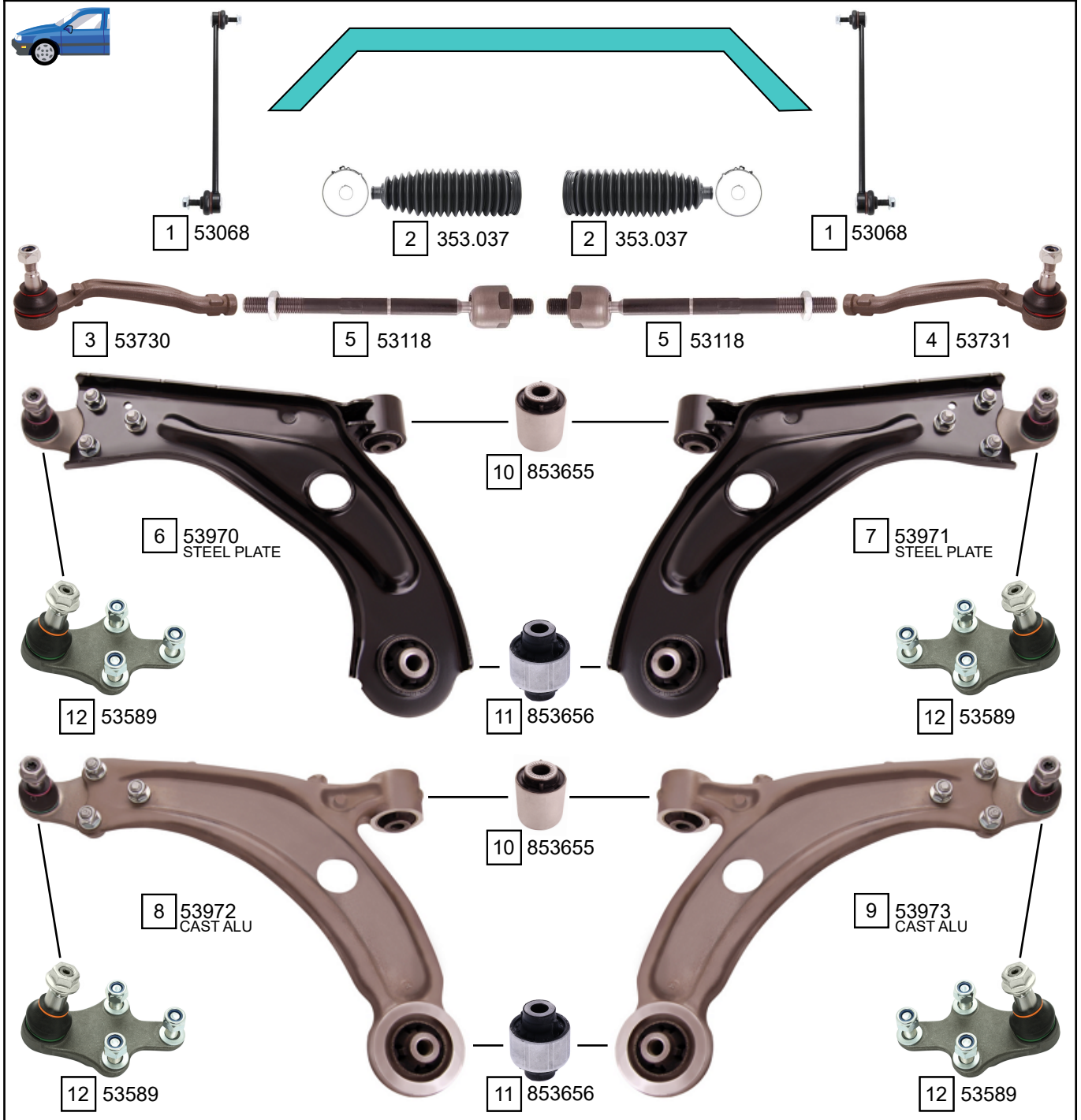

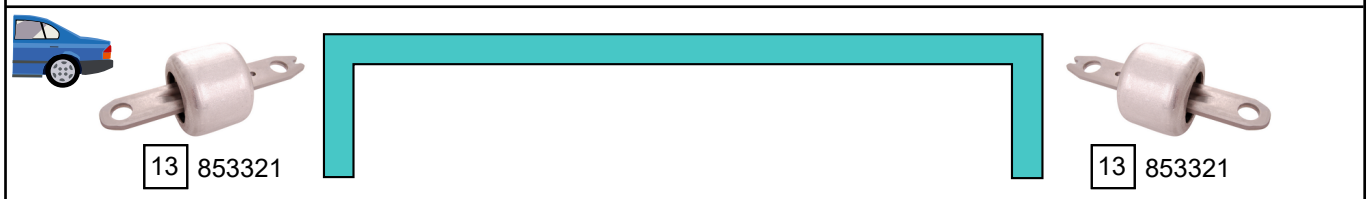

Ref.	Sidem Ref.	Description	OE-number	Measures	Ref.	Sidem Ref.	Description	OE-number	Measures
1	53068	stabiliser link	98 090 457 80	L:335	8	53972	TCA left wbj	98 005 966 80 S1	c:16.5
2	353.037	steering rack gaiter	16 108 175 80	D:51 d:12 L:186	9	53973	TCA right wbj	98 005 965 80 S1	c:16.5
3	53730	tie rod end left	16 108 177 80	c:14.5 th:FM14X1.5R	10	853655	silentblock for TCA	96 760 321 80	di:14.3 do:43.4 (*)
4	53731	tie rod end right	16 108 178 80	c:14.5 th:FM14X1.5R	11	853656	silentblock for TCA	96 760 352 80	di:14.1 do:50.3 (*)
5	53118	axial joint	16 108 176 80	th:MM14x1.5R L:225	12	53589	ball joint	98 034 340 80	c:16.5
6	53970	TCA left wbj	96 783 113 80 S1	c:16.5	13	853321	mounting axle body	98 034 811 80	do:80
7	53971	TCA right wbj	96 783 112 80 S1	c:16.5					

Copyright 2021

CITROEN
C5

C5 I (DC/DE) 03/2001 - 08/2004
C5 II (RC/RE) 08/2004 - 01/2008

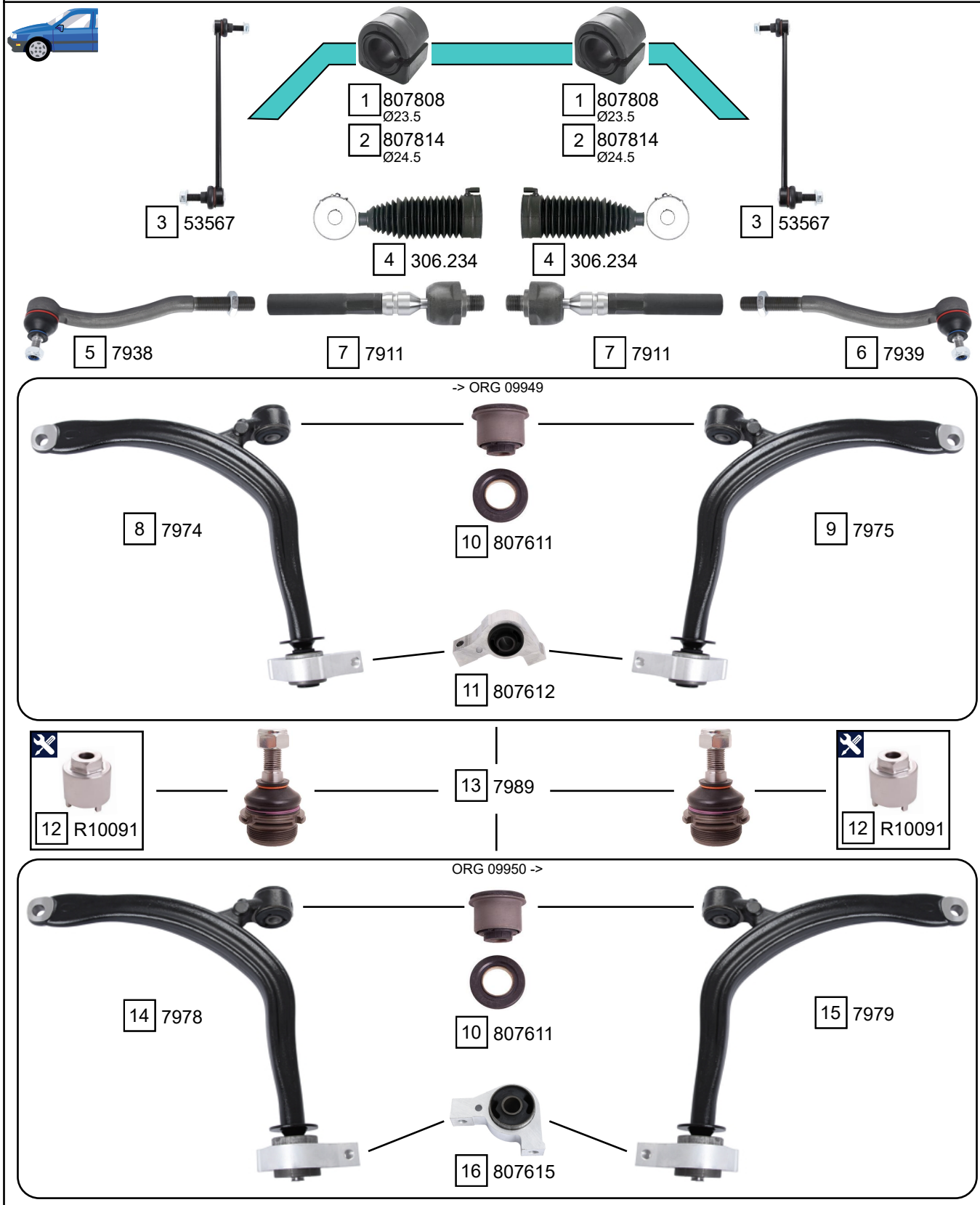

Ref.	Sidem Ref.	Description	OE-number	Measures	Ref.	Sidem Ref.	Description	OE-number	Measures
1	807808	stabiliser mounting	5094 83	di:21.5	9	7975	TCA right wobj	3521 G3	c:15.3
2	807814	stabiliser mounting	5094 90	di:22.5	10	807611	silentblock for TCA	3523 84	di:14 do:40.3 (*)
3	53567	stabiliser link	5087 60	L:319	11	807612	silentblock for TCA	3523 95	di:18 do:45 (*)
4	306.234	steering rack gaiter	4066 74	D:58 d:21 L:176	12	R10091	mounting tool	SEE PAGE II	di:43.3
5	7938	tie rod end left	3817 59	c:12.2 th:MM16X1.5R	13	7989	ball joint	3640 71	c:15.9
6	7939	tie rod end right	3817 60	c:12.2 th:MM16X1.5R	14	7978	TCA left wobj	3520 P0	c:15.2
7	7911	axial joint	3812 C8	th:MM16X1.5R L:183	15	7979	TCA right wobj	3521 K0	c:15.2
8	7974	TCA left wobj	3520 K3	c:15.3	16	807615	silentblock for TCA	3523 AR	di:18 do:50 (*)

Copyright 2021

C5 I (DC/DE) 03/2001 - 08/2004
C5 II (RC/RE) 08/2004 - 01/2008

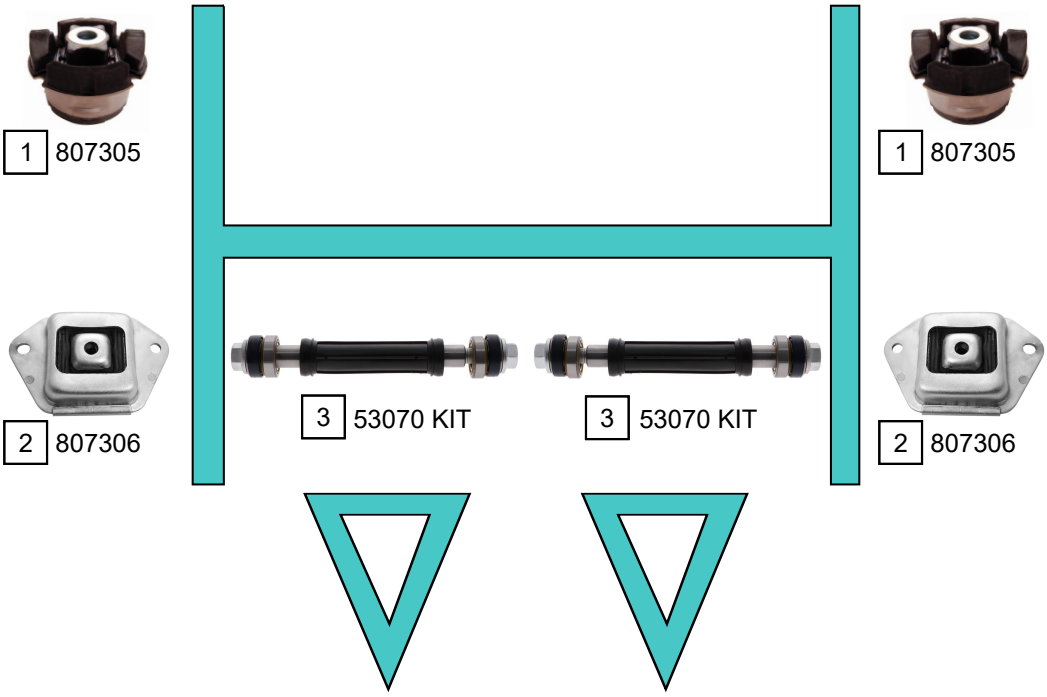

Ref.	Sidem Ref.	Description	OE-number	Measures	Ref.	Sidem Ref.	Description	OE-number	Measures
1	807305	mounting axle body	5131 C7	di:15 do:75	3	53070 KIT	repair kit rear axle	5132 67 S1	
2	807306	mounting axle body	5131 C8						

Copyright 2021

CITROEN
C5

C5 III (RD/TD) 02/2008 - 06/2017

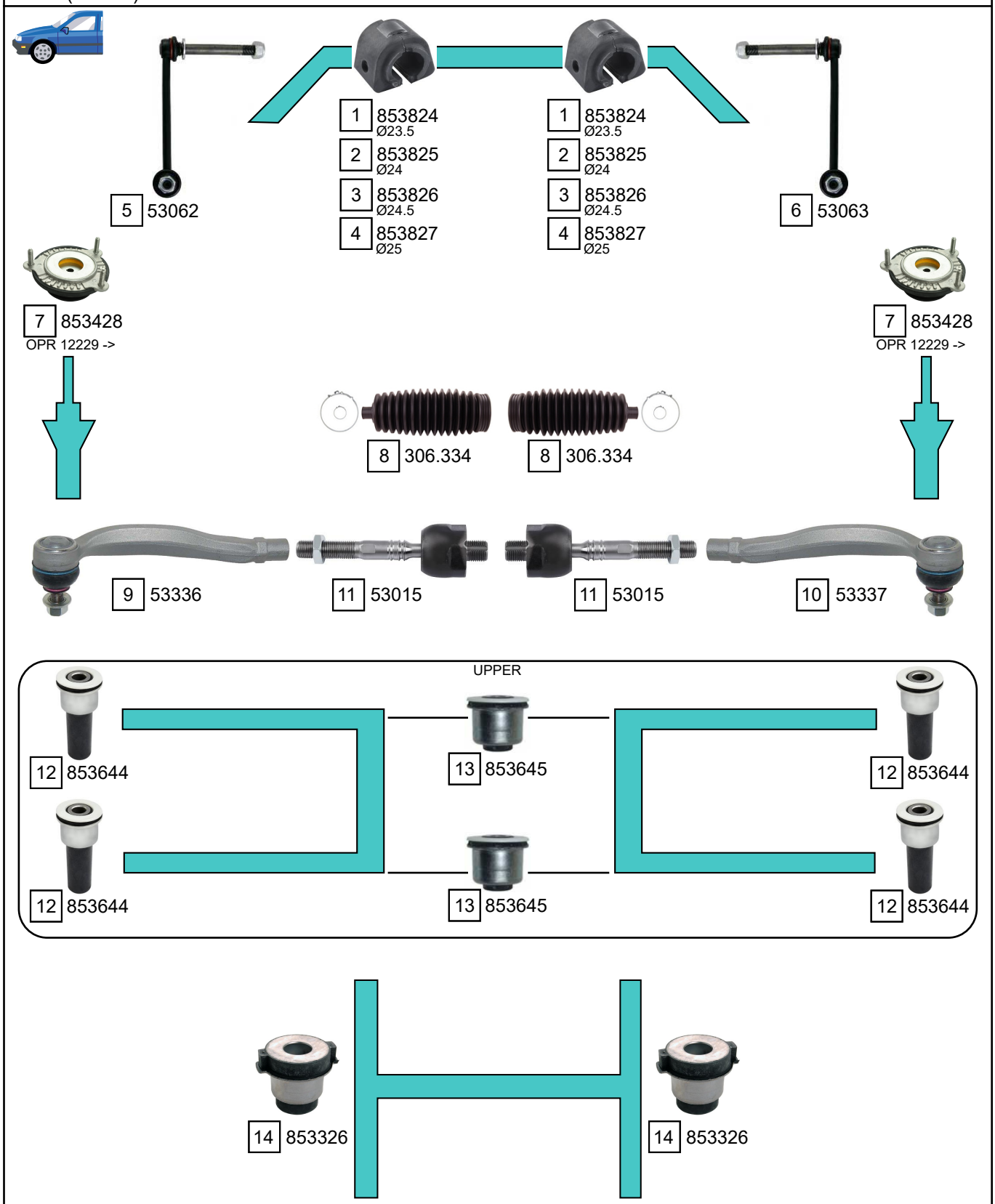

Ref.	Sidem Ref.	Description	OE-number	Measures	Ref.	Sidem Ref.	Description	OE-number	Measures
1	853824	stabiliser mounting	5094 98	di:24	8	306.334	steering rack gaiter	4066 88	D:50 d:13.5 L:177
2	853825	stabiliser mounting	5094 99	di:21	9	53336	tie rod end left	16 099 482 80	c:14.9 th:FM14x1.5R
3	853826	stabiliser mounting	5094 A0	di:21.5	10	53337	tie rod end right	16 099 483 80	c:14.9 th:FM14x1.5R
4	853827	stabiliser mounting	5094 A1	di:22	11	53015	axial joint	3812 F3	th:MM16x1.5R L:129
5	53062	stabiliser link left	5087 52	L:200	12	853644	silentblock for TCA	3523 AZ	di:12.2 do:33 (*)
6	53063	stabiliser link right	5087 53	L:200	13	853645	silentblock for TCA	3523 CA	di:10.3 do:32.1 (*)
7	853428	strut mount	5038 A6	di:10.4 do:118.2 L:43.5	14	853326	mounting axle body	3504 38	di:20.1 do:40.5

Copyright 2021

C5 III (RD/TD) 02/2008 - 06/2017

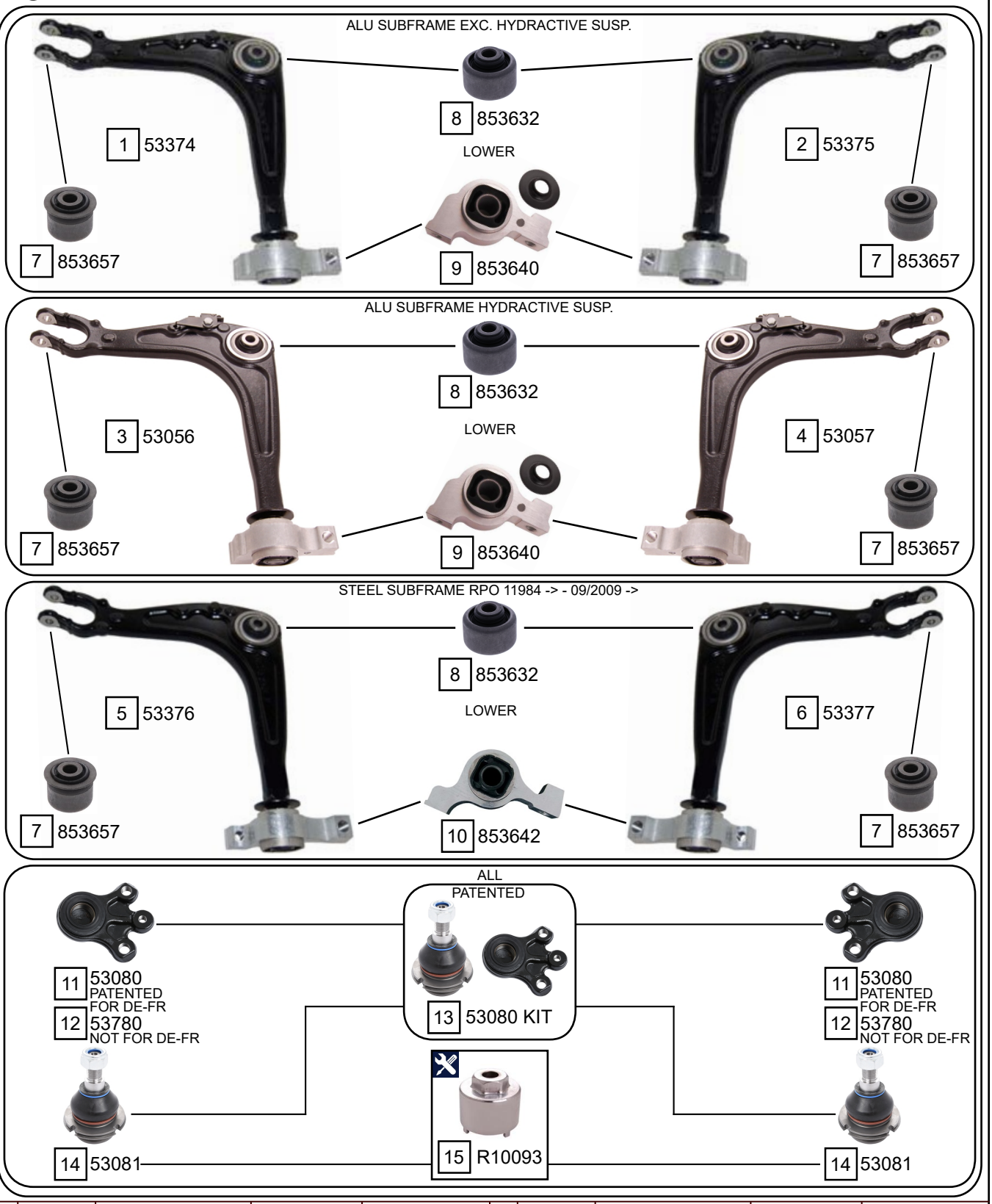

Ref.	Sidem Ref.	Description	OE-number	Measures	Ref.	Sidem Ref.	Description	OE-number	Measures
1	53374	TCA left wobj	3520 W1		9	853640	silentblock for TCA	Part of	di:19.9 do:19.9 (*)
2	53375	TCA right wobj	3521 S4		10	853642	silentblock for TCA	Part of	di:19.9 do:19.9 (*)
3	53056	TCA left wobj	3520 W2		11	53080	ball joint lower	3640 72	
4	53057	TCA right wobj	3521 S5		12	53780	ball joint lower	3640 72	
5	53376	TCA left wobj	3520 X6		13	53080 KIT	ball joint kit	3640 72 S1	
6	53377	TCA right wobj	3521 T7		14	53081	ball joint upper	3640 74	c:18
7	853657	silentblock for TCA	Part of	di:12 do:40.1 (*)	15	R10093	mounting tool	SEE PAGE II	di:53.3
8	853632	silentblock for TCA	3523 AQ	di:14.2 do:56.2 (*)					

Copyright 2021

CITROEN
C5

C5 III (RD/TD) 02/2008 - 06/2017

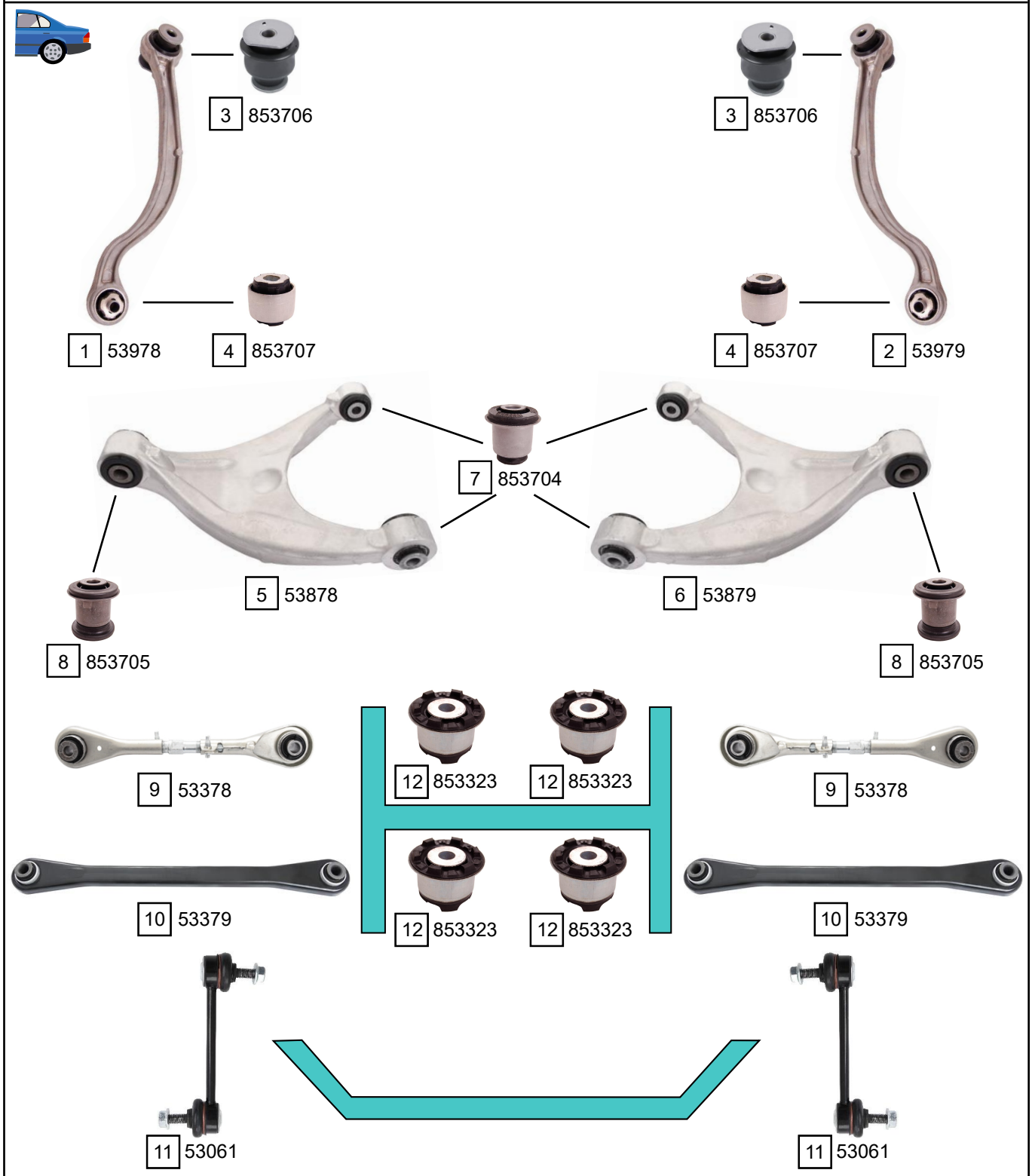

Ref.	Sidem Ref.	Description	OE-number	Measures	Ref.	Sidem Ref.	Description	OE-number	Measures
1	53978	TCA left wobj	98 011 458 80	L:390	7	853704	silentblock for TCA	5131 E0	di:12.1 do:34.2 (*)
2	53979	TCA right wobj	98 011 457 80	L:390	8	853705	silentblock for TCA	Part of	di:12.1 do:35.1 (*)
3	853706	silentblock for TCA	98 010 499 80	di:14.4 do:55.8 (*)	9	53378	track rod	5178 47	L:277
4	853707	silentblock for TCA	5131 C3	di:14.4 do:42.4 (*)	10	53379	track rod	5175 CF	L:440
5	53878	TCA left wobj	5175 CN		11	53061	stabiliser link rear axle	5178 52	L:141
6	53879	TCA right wobj	5175 CP		12	853323	mounting axle body	5152 66	di:15.1 do:54.2

Copyright 2021

C5 AIRCROSS (C84) 11/2018 ->

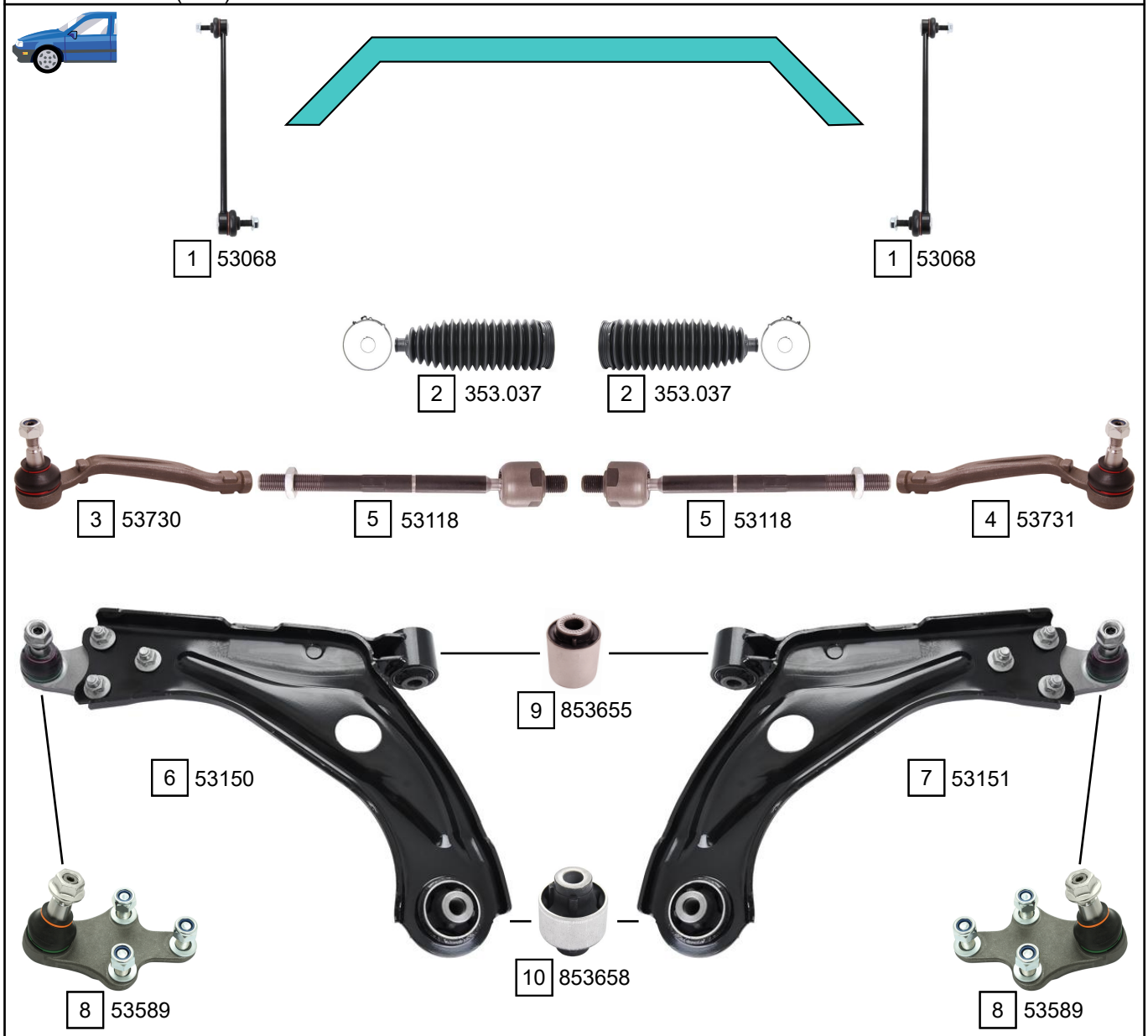

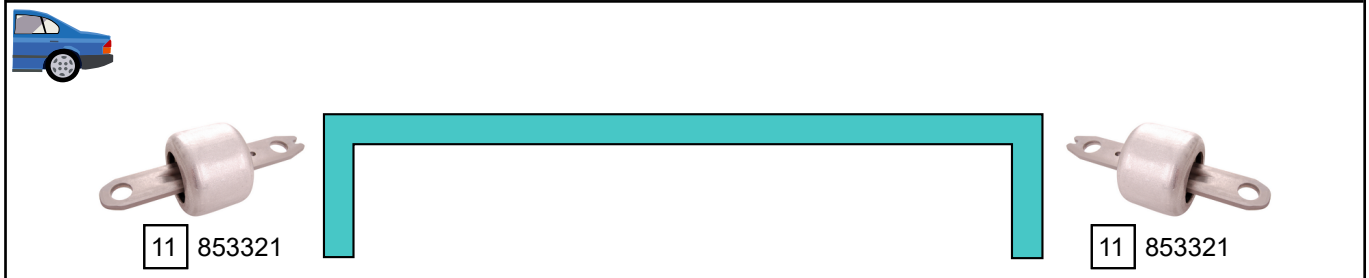

Ref.	Sidem Ref.	Description	OE-number	Measures	Ref.	Sidem Ref.	Description	OE-number	Measures
1	53068	stabiliser link	98 090 457 80	L:335	7	53151	TCA right wbj	98 168 654 80 S1	c:16.5
2	353.037	steering rack gaiter	16 108 175 80	D:51 d:12 L:186	8	53589	ball joint	98 034 340 80	c:16.5
3	53730	tie rod end left	16 108 177 80	c:14.5 th:FM14X1.5R	9	853655	silentblock for TCA	96 760 321 80	di:14.3 do:43.4 (*)
4	53731	tie rod end right	16 108 178 80	c:14.5 th:FM14X1.5R	10	853658	silentblock for TCA	98 163 803 80	di:14.2 do:50 (*)
5	53118	axial joint	16 108 176 80	th:MM14x1.5R L:225	11	853321	mounting axle body	98 034 811 80	do:80
6	53150	TCA left wbj	98 168 655 80 S1	c:16.5					

Copyright 2021

CITROEN
C6

C6 (TD) 09/2005 - 12/2012

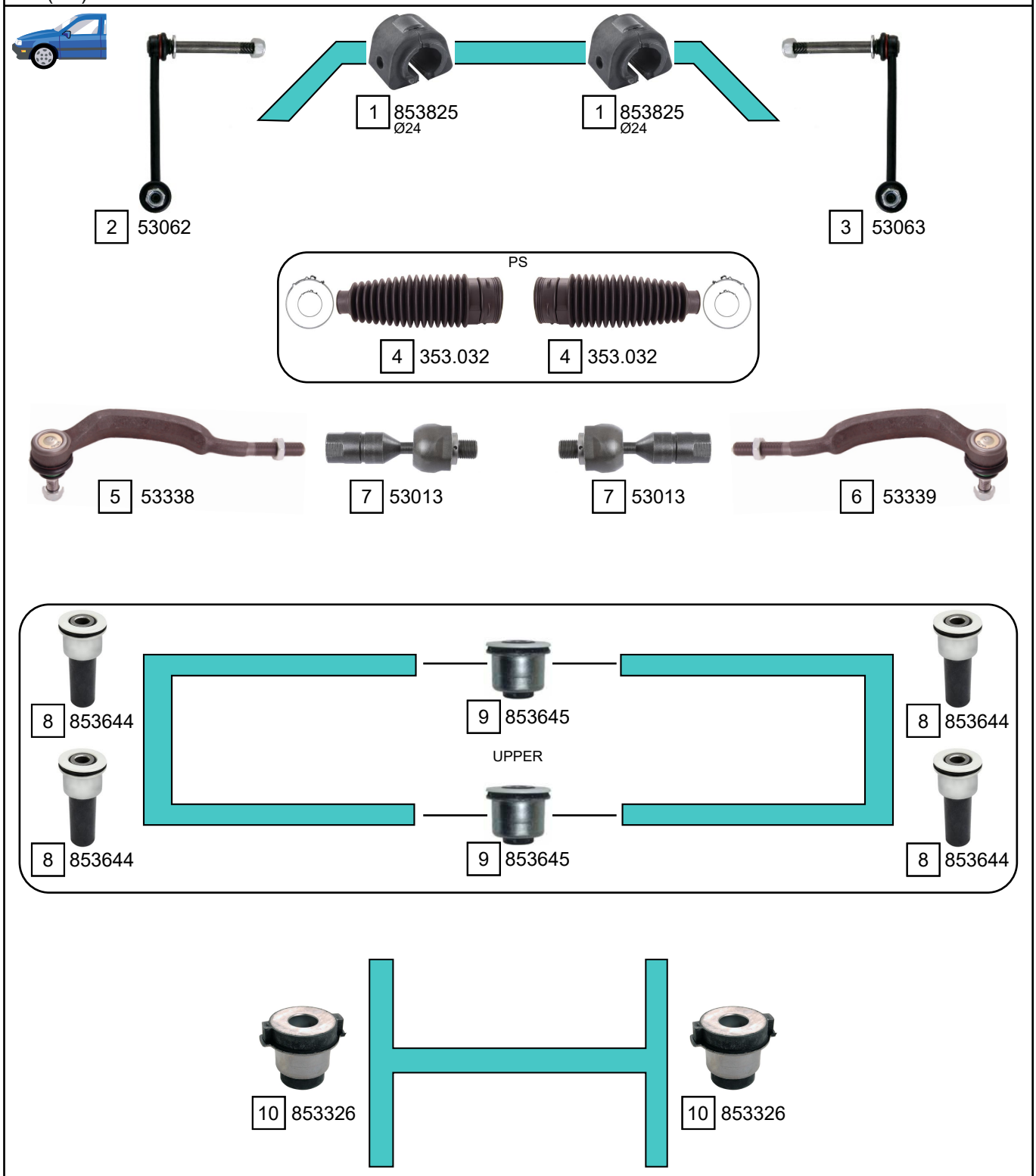

Ref.	Sidem Ref.	Description	OE-number	Measures	Ref.	Sidem Ref.	Description	OE-number	Measures
1	853825	stabiliser mounting	5094 99	di:21	6	53339	tie rod end right	3817 66	c:14.7 th:MM14x1.5R
2	53062	stabiliser link left	5087 52	L:200	7	53013	axial joint	3812 E7	th:MM16X1.5R L:106
3	53063	stabiliser link right	5087 53	L:200	8	853644	silentblock for TCA	3523 AZ	di:12.2 do:33 (*)
4	353.032	steering rack gaiter	4066 71	D:53 d:24 L:201	9	853645	silentblock for TCA	3523 CA	di:10.3 do:32.1 (*)
5	53338	tie rod end left	3817 65	c:14.7 th:MM14x1.5R	10	853326	mounting axle body	3504 38	di:20.1 do:40.5

Copyright 2021

C6 (TD) 09/2005 - 12/2012

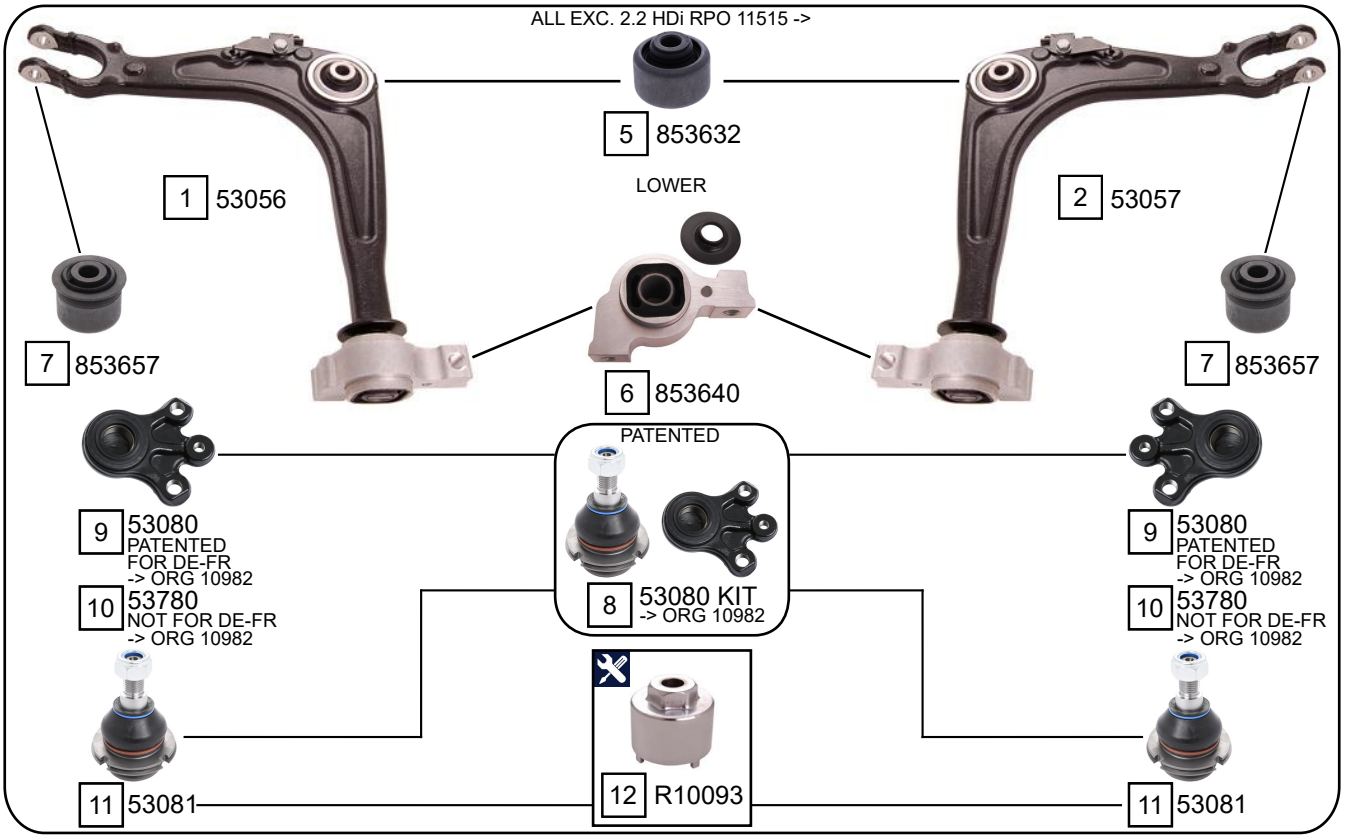

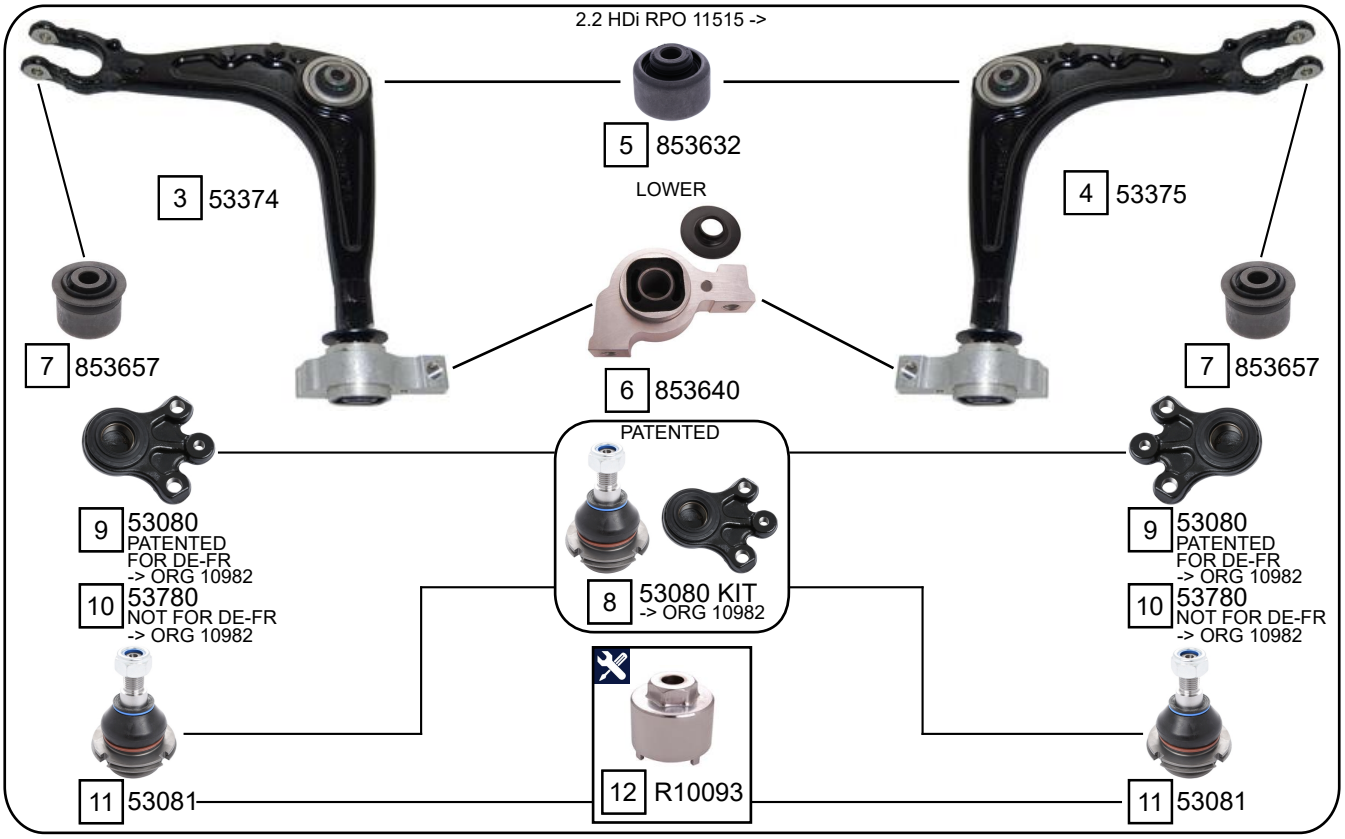

Ref.	Sidem Ref.	Description	OE-number	Measures	Ref.	Sidem Ref.	Description	OE-number	Measures
1	53056	TCA left wobj	3520 W2		7	853657	silentblock for TCA	Part of	di:12 do:40.1 (*)
2	53057	TCA right wobj	3521 S5		8	53080 KIT	ball joint kit	3640 72 S1	
3	53374	TCA left wobj	3520 W1		9	53080	ball joint lower	3640 72	
4	53375	TCA right wobj	3521 S4		10	53780	ball joint lower	3640 72	
5	853632	silentblock for TCA	3523 AQ	di:14.2 do:56.2 (*)	11	53081	ball joint upper	3640 74	c:18
6	853640	silentblock for TCA	Part of	di:19.9 do:19.9 (*)	12	R10093	mounting tool	SEE PAGE II	di:53.3

Copyright 2021

CITROEN
C6

C6 (TD) 09/2005 - 12/2012

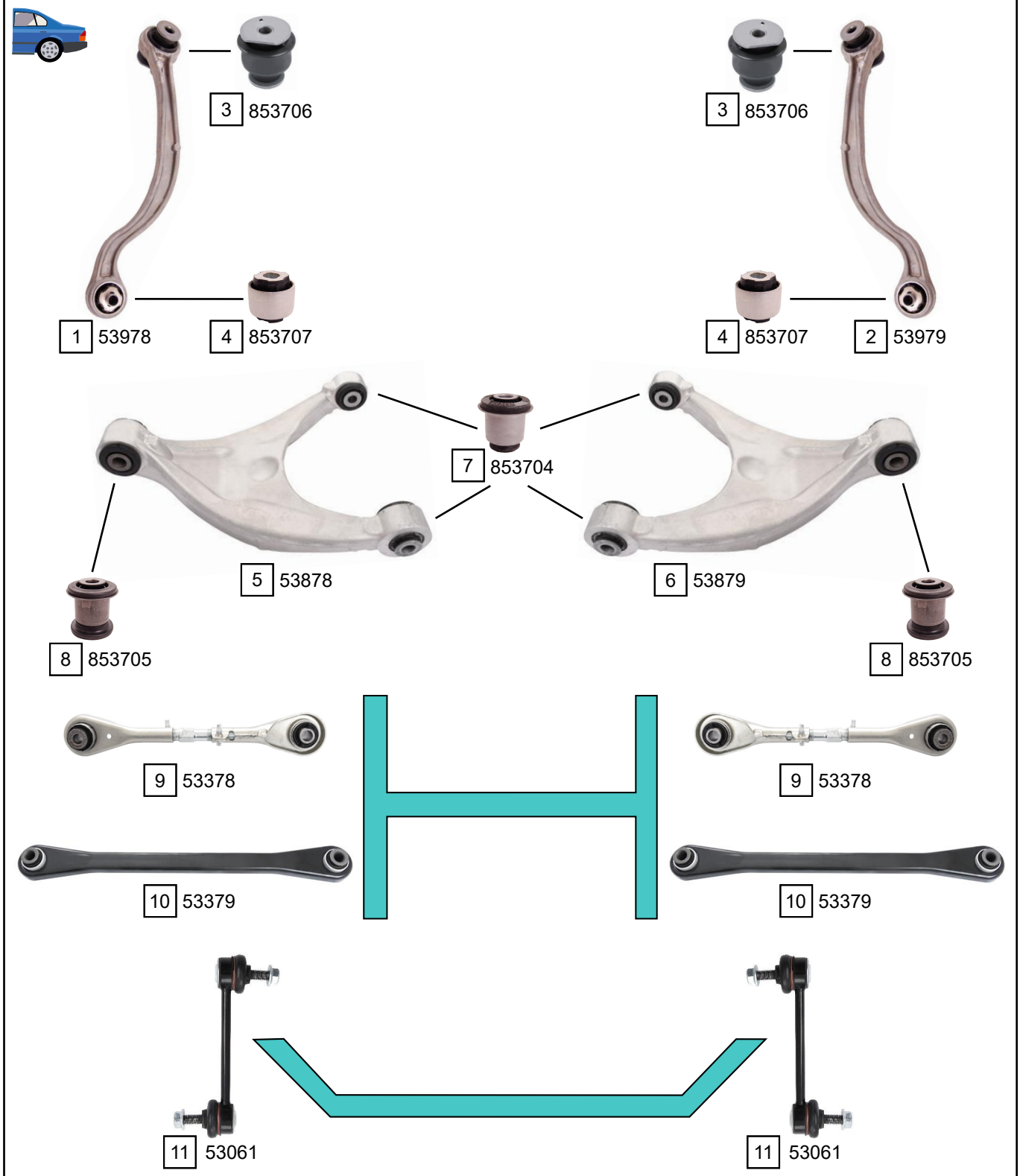

Ref.	Sidem Ref.	Description	OE-number	Measures	Ref.	Sidem Ref.	Description	OE-number	Measures
1	53978	TCA left wobj	98 011 458 80	L:390	7	853704	silentblock for TCA	5131 E0	di:12.1 do:34.2 (*)
2	53979	TCA right wobj	98 011 457 80	L:390	8	853705	silentblock for TCA	Part of	di:12.1 do:35.1 (*)
3	853706	silentblock for TCA	98 010 499 80	di:14.4 do:55.8 (*)	9	53378	track rod	5178 47	L:277
4	853707	silentblock for TCA	5131 C3	di:14.4 do:42.4 (*)	10	53379	track rod	5175 CF	L:440
5	53878	TCA left wobj	5175 CN		11	53061	stabiliser link rear axle	5178 52	L:141
6	53879	TCA right wobj	5175 CP						

Copyright 2021

C8 07/2002 - 06/2014

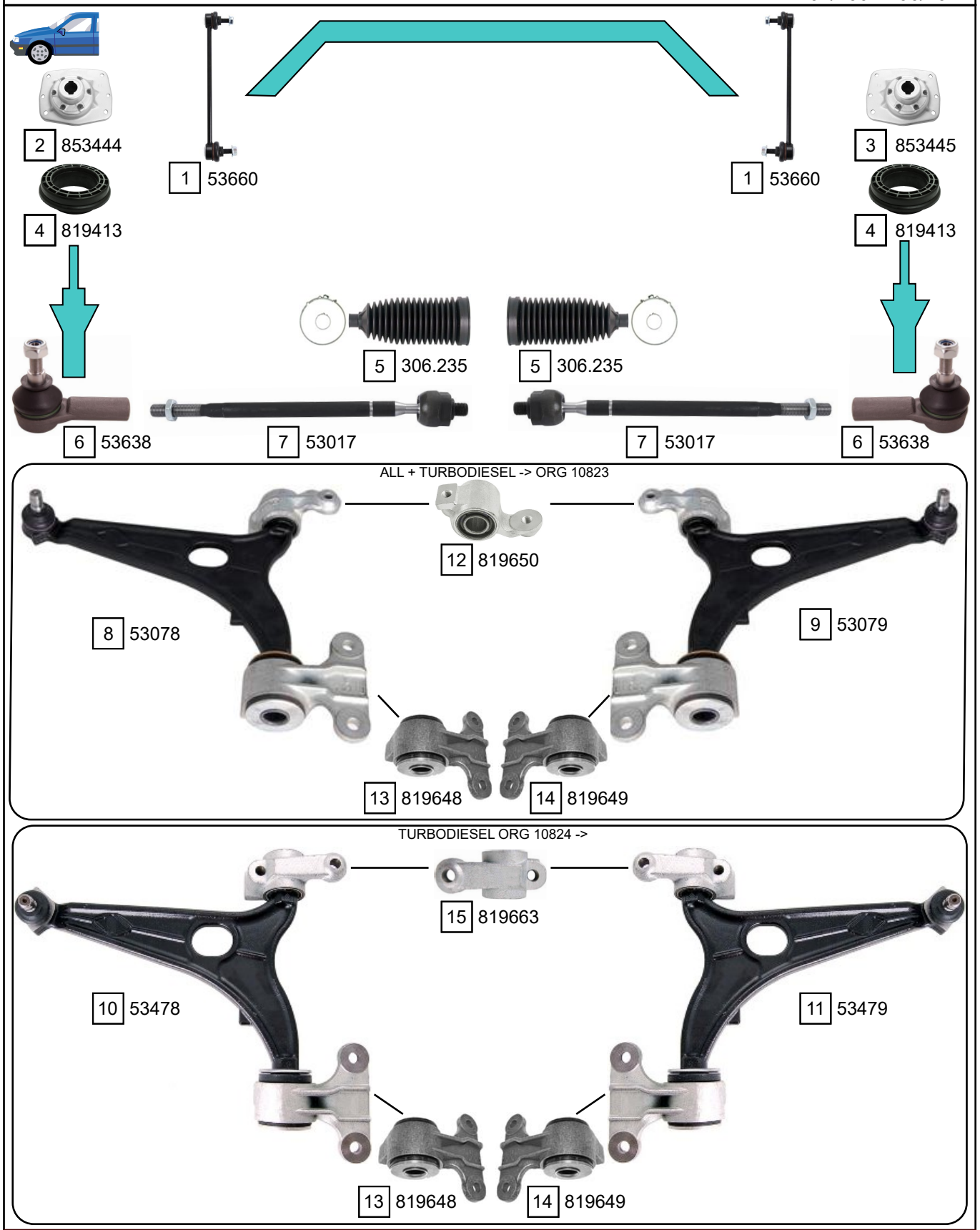

Ref.	Sidem Ref.	Description	OE-number	Measures	Ref.	Sidem Ref.	Description	OE-number	Measures
1	53660	stabiliser link	5087 51	L:262	9	53079	TCA right wbj	3521 K6	c:17
2	853444	strut mount	5038 68	di:14.1	10	53478	TCA left wbj	3520 X0	c:17
3	853445	strut mount	5038 70	di:14.1	11	53479	TCA right wbj	3521 T2	c:17
4	819413	bearing	5035 55	di:78 do:128 L:45.5	12	819650	silentblock for TCA	Part of	di:23 (*)
5	306.235	steering rack gaiter	4066 70	D:64 d:14 L:175	13	819648	silentblock for TCA	Part of	di:22.9 do:22.9 (*)
6	53638	tie rod end	4059 12	c:13.6 th:FM14x1.5R	14	819649	silentblock for TCA	Part of	di:22.9 do:22.9 (*)
7	53017	axial joint	3812 E2	th:MM14x1.5R L:315	15	819663	silentblock for TCA	Part of	di:22.9 (*)
8	53078	TCA left wbj	3520 P6	c:17					

Copyright 2021

CITROEN
C8

C8 | 07/2002 - 06/2014

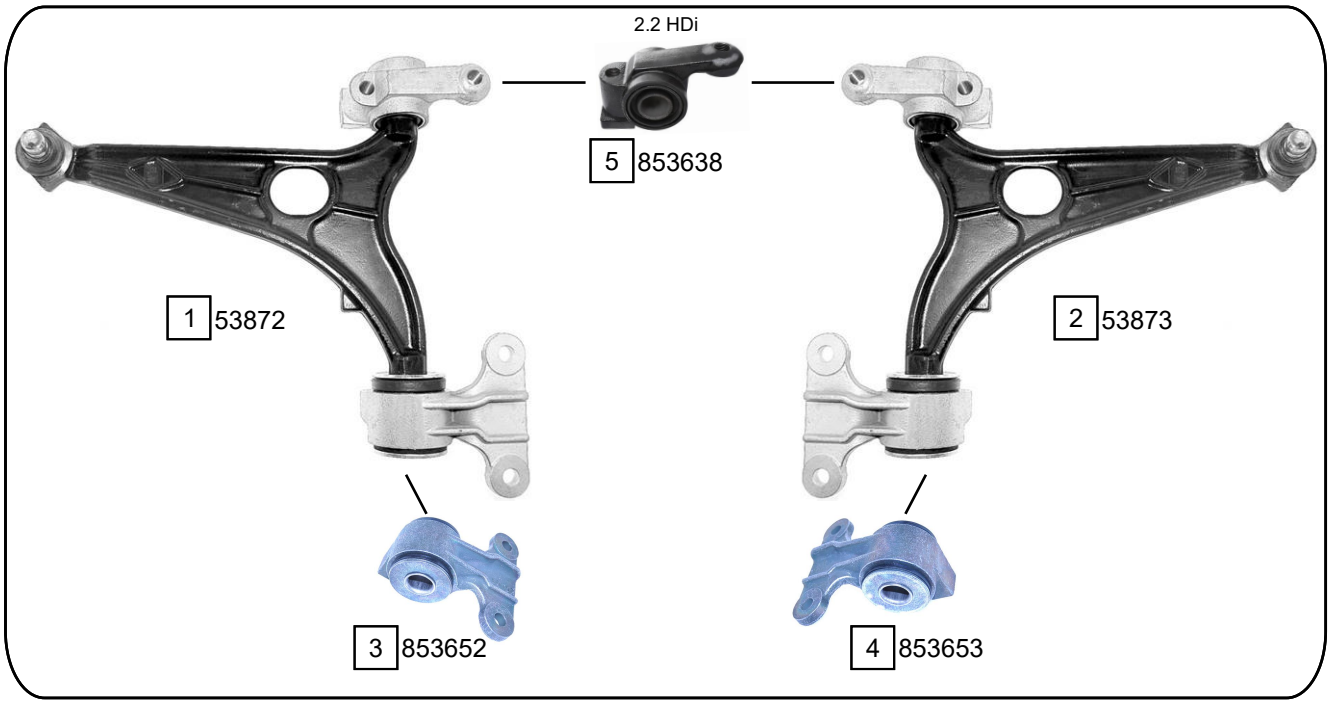

Ref.	Sidem Ref.	Description	OE-number	Measures	Ref.	Sidem Ref.	Description	OE-number	Measures
1	53872	TCA left wbj	3520 V8	c:19	4	853653	silentblock for TCA right	Part of	di:22.9 do:22.9 (*)
2	53873	TCA right wbj	3521 S0	c:19	5	853638	silentblock for TCA	Part of	di:22.9 (*)
3	853652	silentblock for TCA left	Part of	di:22.9 do:22.9 (*)					

Copyright 2021

C15 (VD_) 10/1984 - 12/2005

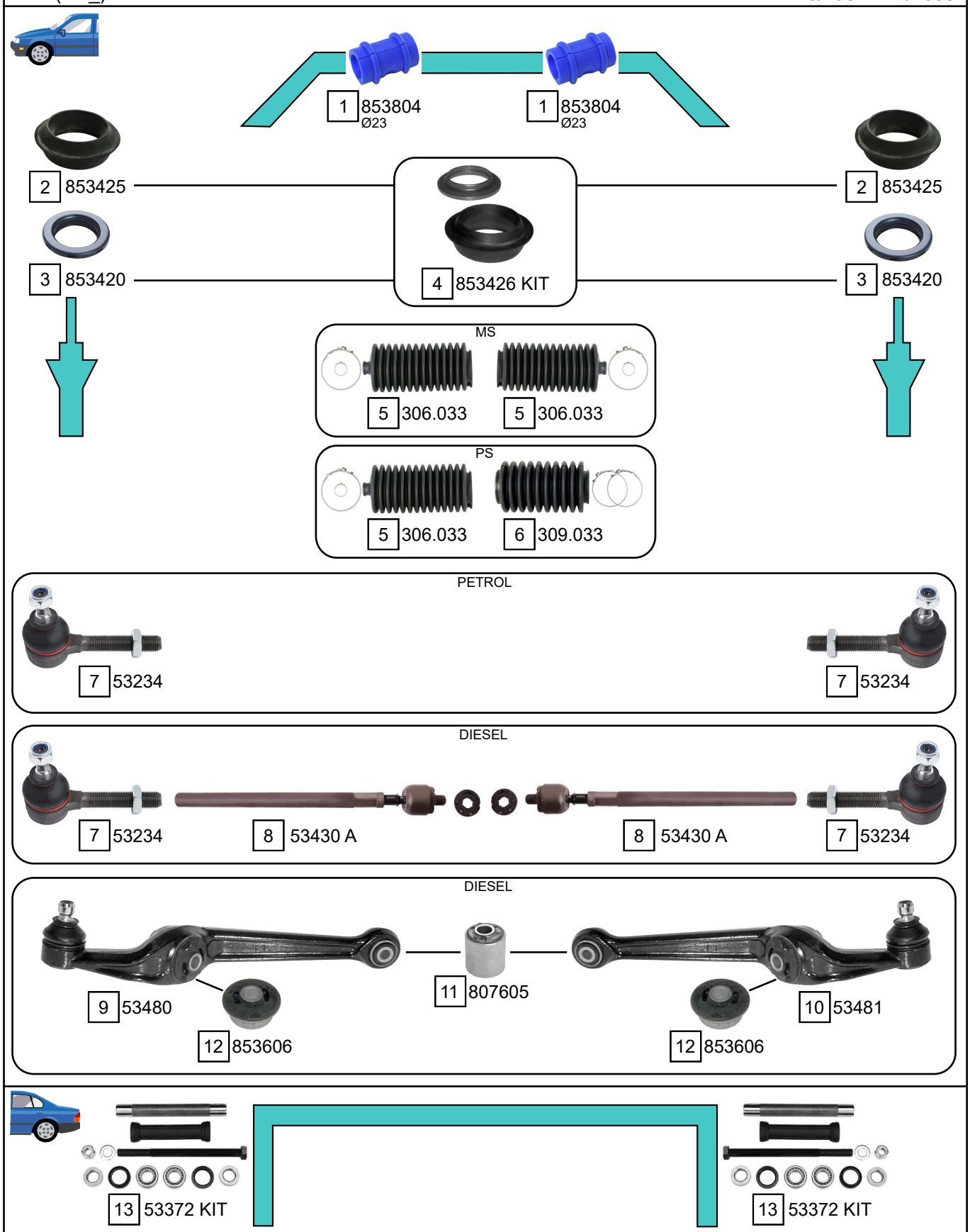

Ref.	Sidem Ref.	Description	OE-number	Measures	Ref.	Sidem Ref.	Description	OE-number	Measures
1	853804	stabiliser mounting	5094 40	di:23	8	53430 A	axial joint	96 136 394	th:MM12X1R L:317
2	853425	strut mount	5037 33	di:61.5 do:99.5 L:35.3	9	53480	TCA left wbj	3520 51	c:16
3	853420	bearing	5035 27	di:65 do:99.5 L:20	10	53481	TCA right wbj	3521 34	c:16
4	853426 KIT	strut mount kit	5037 33 S1	di:61.5 do:99.5 L:35.3	11	807605	silentblock for TCA	3523 20	di:10 do:28 (*)
5	306.033	steering rack gaiter	4066 20	D:40 d:10 L:175	12	853606	silentblock for TCA	3523 49	di:12.0 do:36.5 (*)
6	309.033	steering rack gaiter	4066 22	D:40 d:40 L:115	13	53372 KIT	repair kit rear axle	5132 44 S1	
7	53234	tie rod end	3817 50	c:12 th:MM14X1.5R					

Copyright 2021

CITROEN
C25

C25 07/1981 - 03/1994

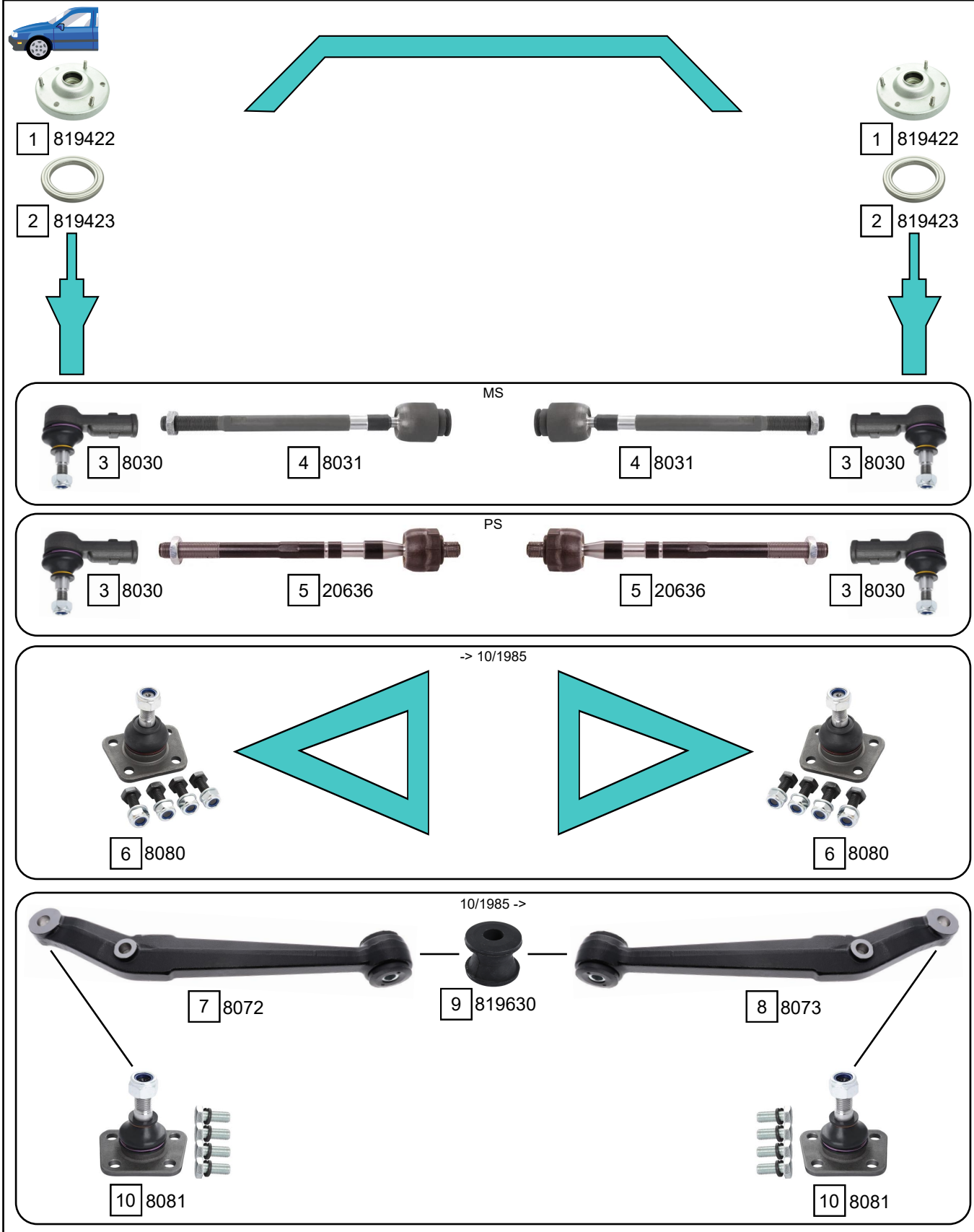

Ref.	Sidem Ref.	Description	OE-number	Measures	Ref.	Sidem Ref.	Description	OE-number	Measures
1	819422	strut mount	5210 20	di:14.2 do:149 L:55	6	8080	ball joint lower	3640 17	c:16
2	819423	bearing	5035 17	di:49.3 do:70.3 L:7	7	8072	TCA left wobj	3520 76	c:16.2
3	8030	tie rod end	3817 11	c:14.4 th:FM16X1.5R	8	8073	TCA right wobj	3521 52	c:16.2
4	8031	axial joint	3812 27	th:FM16X1.5R L:275	9	819630	silentblock for TCA	Part of	di:13.7 do:27.1 (*)
5	20636	axial joint	ZF09941080	th:MM16x1.5R L:278	10	8081	ball joint lower	3640 26	c:16.8

Copyright 2021

CX 04/1983 - 12/1992

1 7638 A 1 7638 A

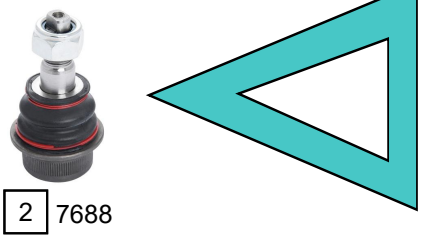

UPPER

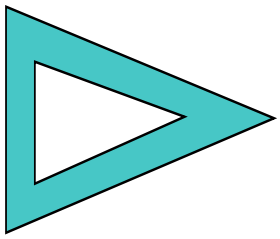

2 7688 2 7688

4 R10079 4 R10079

LOWER

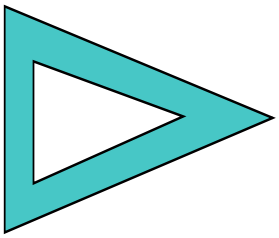

3 7782 3 7782

Ref.	Sidem Ref.	Description	OE-number	Measures	Ref.	Sidem Ref.	Description	OE-number	Measures
1	7638 A	axial joint	95 606 935	th:FM16X1.25R L:94	3	7782	ball joint lower	95 558 213	c:17.7
2	7688	ball joint upper	54 29 314	c:18 do:38.3	4	R10079	mounting tool ring ø46 ø38	SEE PAGE III	di:38 do:46

Copyright 2021

CITROEN
DS3

DS3 (CITROEN)	11/2009 - 07/2015
DS3 CONVERTIBLE (CITROEN)	01/2013 - 07/2015
DS 3 (DS)	07/2015 - 07/2019
DS 3 CONVERTIBLE (DS)	07/2015 - 07/2019

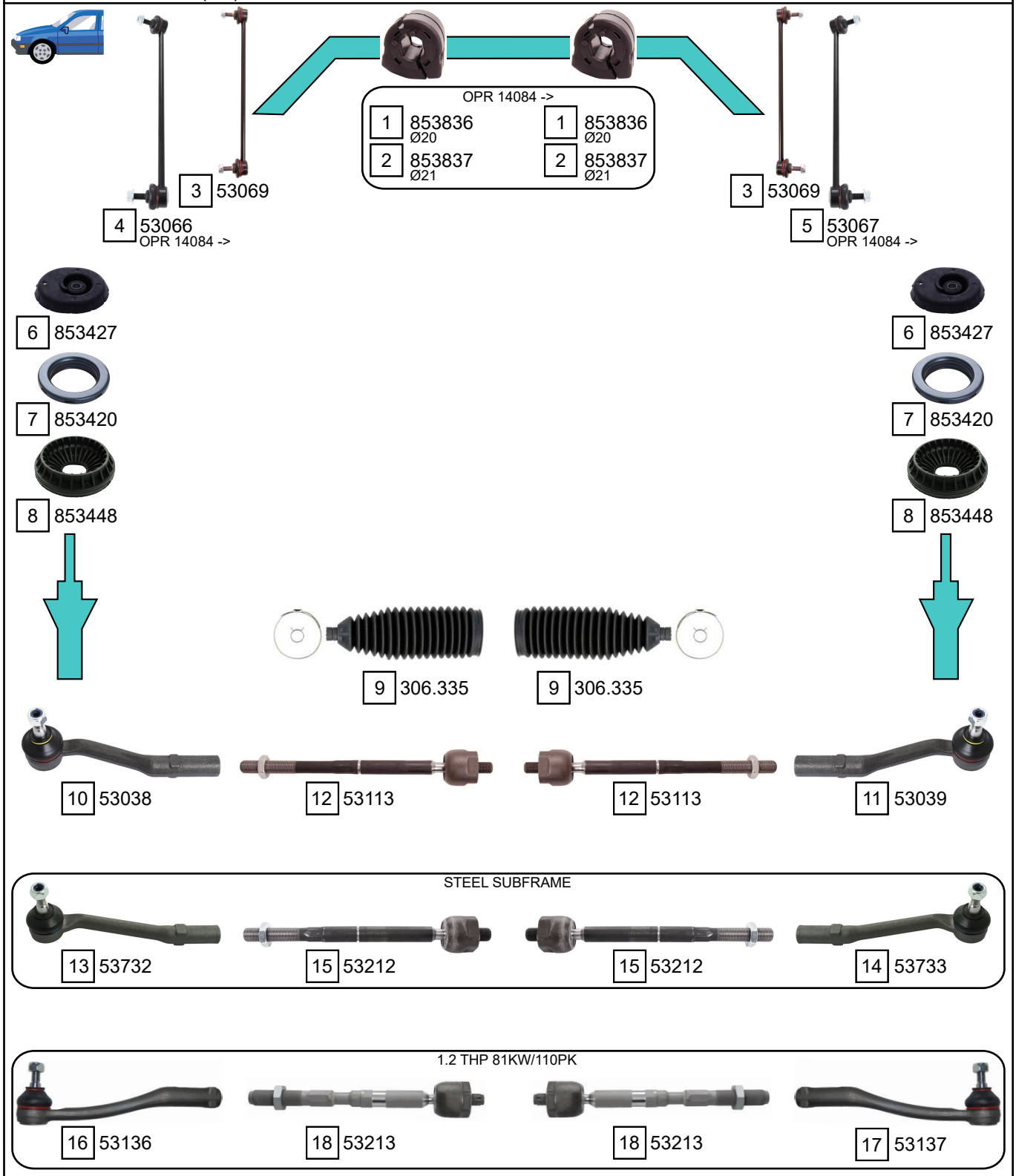

Ref.	Sidem Ref.	Description	OE-number	Measures	Ref.	Sidem Ref.	Description	OE-number	Measures
1	853836	stabiliser mounting	5094 C1	di:15	10	53038	tie rod end left	3817 92	c:12.2 th:FM14X1.5R
2	853837	stabiliser mounting	5094 C2	di:16.5	11	53039	tie rod end right	3817 91	c:12.2 th:FM14X1.5R
3	53069	stabiliser link	5087 71	L:335	12	53113	axial joint	3812 F6	th:MM12x1R L:245
4	53066	stabiliser link left	5087 69	L:330	13	53732	tie rod end left	16 231 410 80	c:12.2 th:FM14X1.5R
5	53067	stabiliser link right	5087 68	L:330	14	53733	tie rod end right	16 231 411 80	c:12.2 th:FM14.X1.5R
6	853427	strut mount	5038 G6	di:14.3 do:66.5 L:28.5	15	53212	axial joint	16 231 408 80	th:MM14X125R L:230
7	853420	bearing	5035 27	di:65 do:99.5 L:20	16	53136	tie rod end left	3817 67	c:12.1 th:FM16X1.5R
8	853448	strut mount	5033 C3	di:33 do:106 L:47	17	53137	tie rod end right	3817 68	c:12.1 th:FM16X1.5R
9	306.335	steering rack gaiter	4066 97	D:53 d:13 L:192	18	53213	axial joint	16 111 586 80	th:MM12X1R L:215

Copyright 2021

DS3 (CITROEN)	11/2009 - 07/2015
DS3 CONVERTIBLE (CITROEN)	01/2013 - 07/2015
DS 3 (DS)	07/2015 - 07/2019
DS 3 CONVERTIBLE (DS)	07/2015 - 07/2019

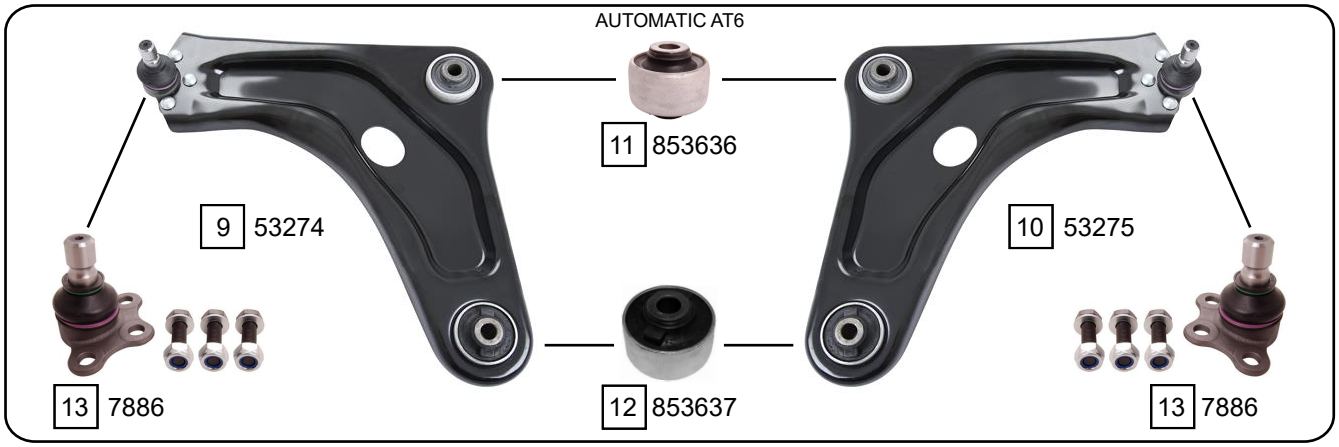

14 807303

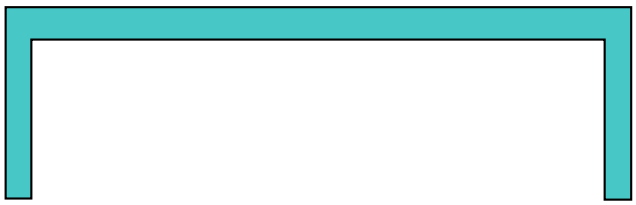

14 807303

Ref.	Sidem Ref.	Description	OE-number	Measures	Ref.	Sidem Ref.	Description	OE-number	Measures
1	53474	TCA left wbj	3520 W8	c:18	8	853654	silentblock for TCA	Part of	di:18 do:55.3 (*)
2	53475	TCA right wbj	3521 T0	c:18	9	53274	TCA left wbj	3520 R7	c:18
3	853648	silentblock for TCA	3523 EA	di:18 do:55.3 (*)	10	53275	TCA right wbj	98 105 881 80	c:18
4	853649	silentblock for TCA	3523 EE	di:18 do:55.3 (*)	11	853636	silentblock for TCA	3523 CE	di:14.2 do:56.5 (*)
5	53586	ball joint	3640 77	c:18	12	853637	silentblock for TCA	3523 CC	di:14.2 do:56.5 (*)
6	53876	TCA left wbj	98 032 865 80	c:18	13	7886	ball joint	3640 65	c:18
7	53877	TCA right wbj	98 032 864 80	c:18	14	807303	mounting axle body	5131 H4	di:12.2 do:72

Copyright 2021

CITROEN
DS 3

DS 3 CROSSBACK (D34) 10/2018 ->

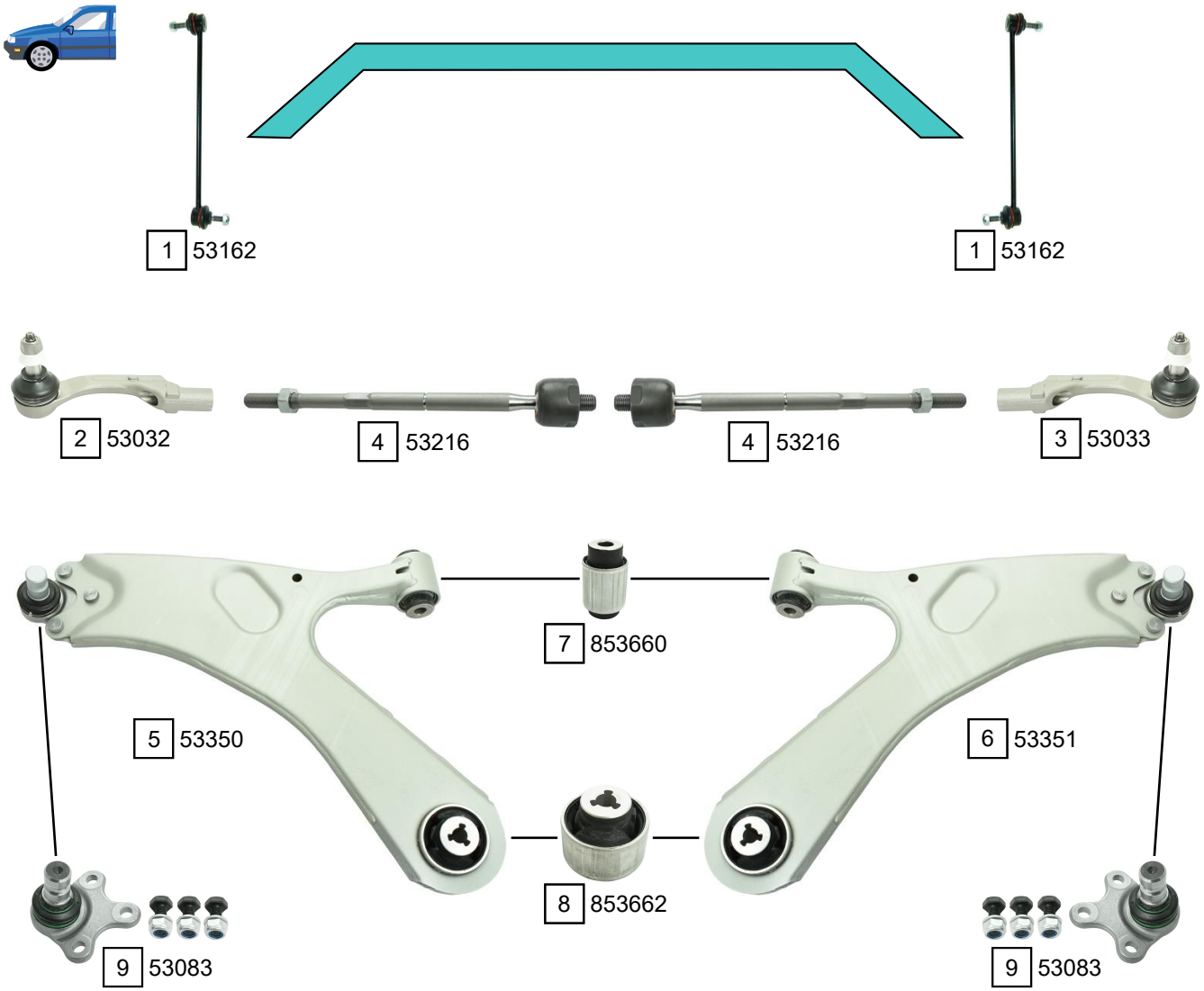

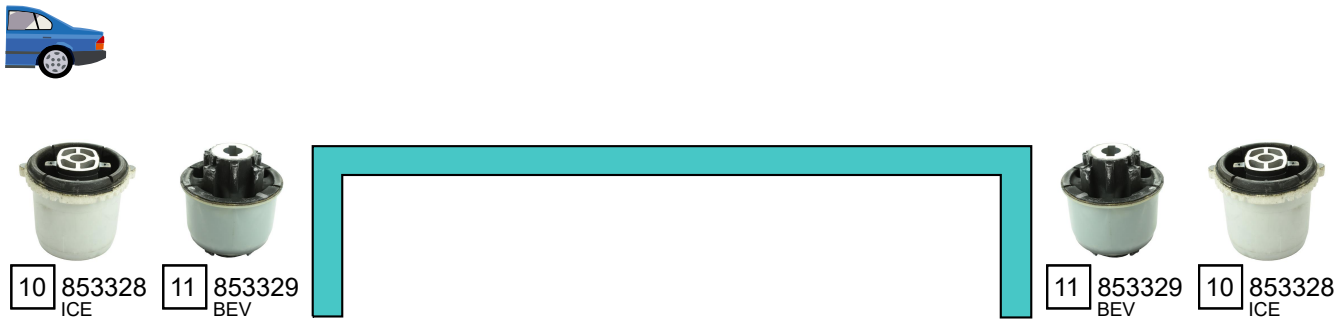

Ref.	Sidem Ref.	Description	OE-number	Measures	Ref.	Sidem Ref.	Description	OE-number	Measures
1	53162	stabiliser link	98 246 525 80	L:324	7	853660	silentblock for TCA	Part of	di:12.2 do:38
2	53032	tie rod end left	16 483 226 80	c:12.1 th:FM 14 X1.5R	8	853662	silentblock for TCA	Part of	di:12.2 do:56.2
3	53033	tie rod end right	16 483 225 80	c:12.1 th:FM 14 X1.5R	9	53083	ball joint	98 246 267 80	c:20
4	53216	axial joint	16 483 222 80	th:MM14X1.5R L:293	10	853328	mounting axle body	98 256 586 80	di:12.2 do:72
5	53350	TCA left wbj	98 315 825 80	c:20	11	853329	mounting axle body	98 359 379 80	di:14.2 do:72
6	53351	TCA right wbj	98 316 827 80	c:20					

Copyright 2021

DS4 (CITROEN) 04/2011 - 07/2015
DS 4 (DS) 07/2015 ->
DS 4 CROSSBACK (DS) 07/2015 ->

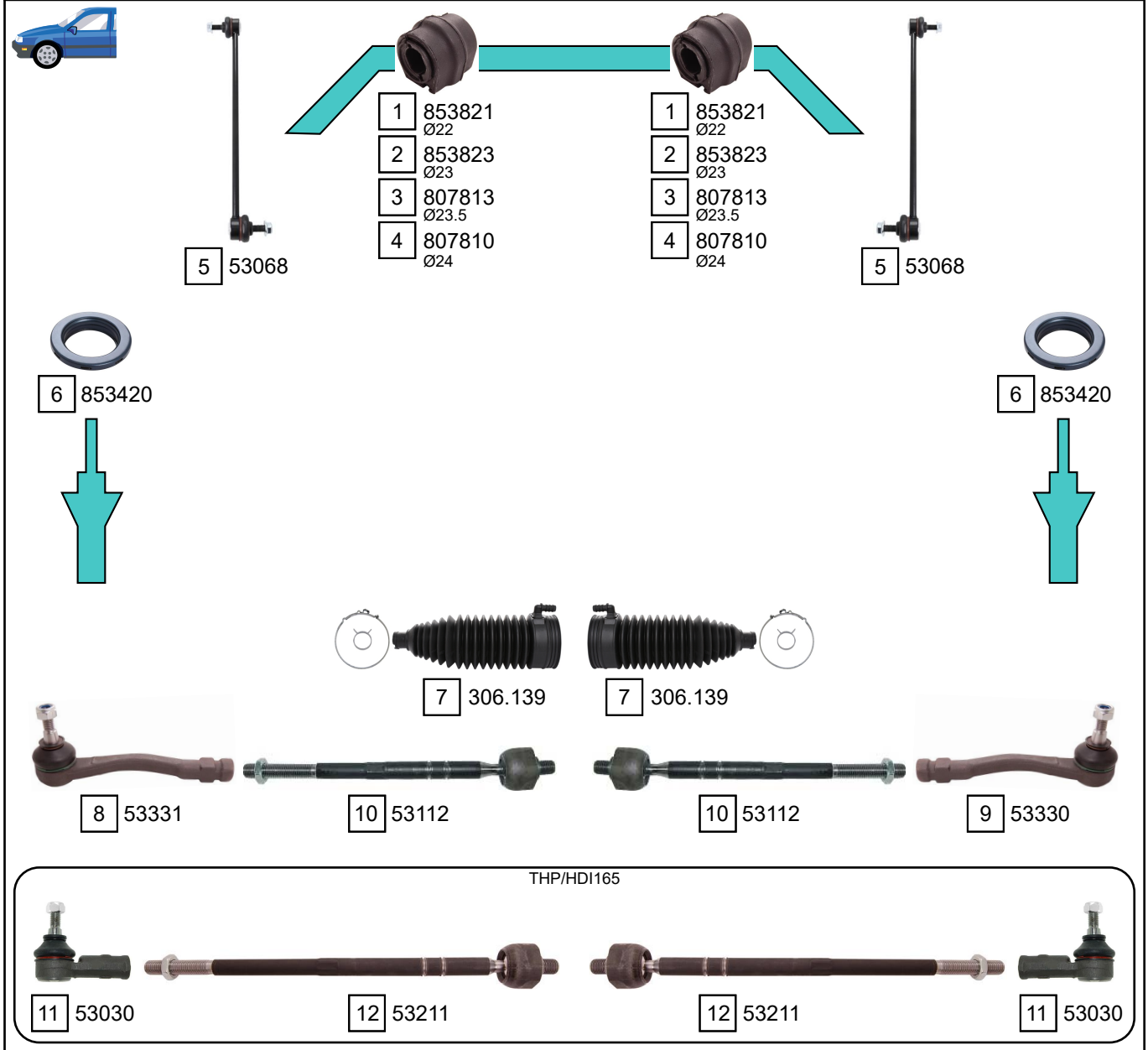

Ref.	Sidem Ref.	Description	OE-number	Measures	Ref.	Sidem Ref.	Description	OE-number	Measures
1	853821	stabiliser mounting	5094 E0	di:21	7	306.139	steering rack gaiter	4066 85	D:61 d:15.5 L:190
2	853823	stabiliser mounting	5094 E3	di:22.5	8	53331	tie rod end left	3817 89	c:12 th:FM14x1.5R
3	807813	stabiliser mounting	5094 F2	di:22	9	53330	tie rod end right	3817 88	c:12 th:FM14x1.5R
4	807810	stabiliser mounting	5094 E4	di:23	10	53112	axial joint	3812 F2	th:MM14x1.5R L:277
5	53068	stabiliser link	98 090 457 80	L:335	11	53030	tie rod end	3817 73	c:14.5 th:FM14X1.5R
6	853420	bearing	5035 27	di:65 do:99.5 L:20	12	53211	axial joint	3812 F8	th:MM14X1.5R L:365

Copyright 2021

CITROEN
DS4

DS4 (CITROEN)	04/2011 - 07/2015
DS 4 (DS)	07/2015 ->
DS 4 CROSSBACK (DS)	07/2015 ->

OPR 13244 ->

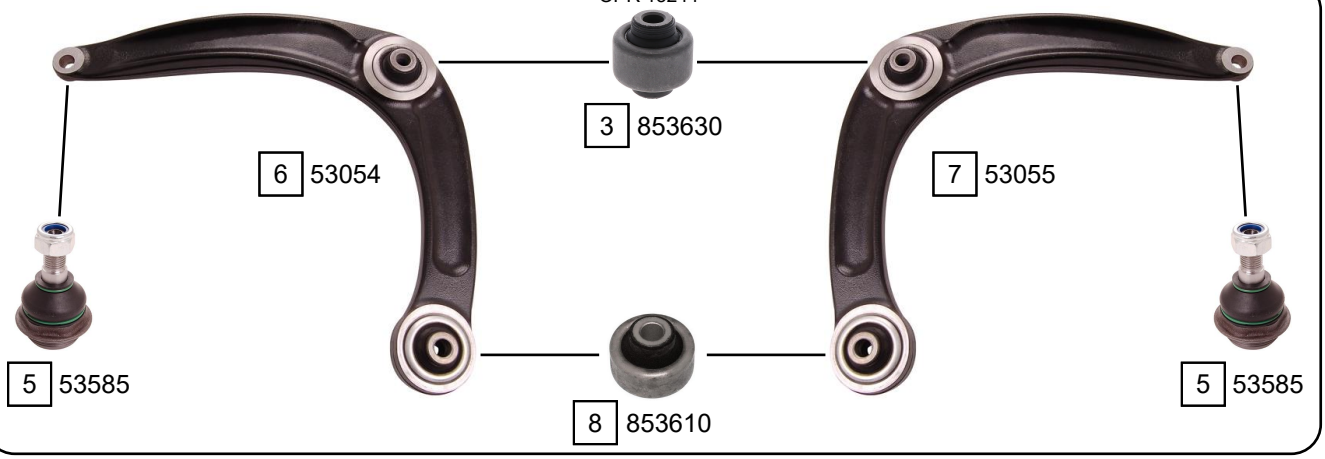

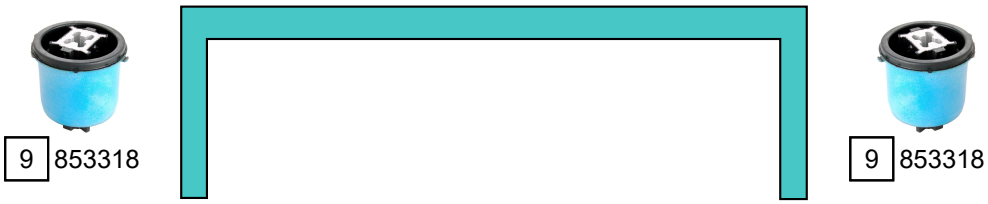

Ref.	Sidem Ref.	Description	OE-number	Measures	Ref.	Sidem Ref.	Description	OE-number	Measures
1	53278	TCA left wobj	3520 V2	c:15.2	6	53054	TCA left wobj	98 056 074 80	c:15.2
2	53279	TCA right wobj	3521 R3	c:15.2	7	53055	TCA right wobj	98 056 073 80	c:15.2
3	853630	silentblock for TCA	3523 91	di:14.1 do:55.2 (*)	8	853610	silentblock for TCA	3523 76	di:14.2 do:55.3 (*)
4	853631	silentblock for TCA	3523 92	di:14.2 do:55.3 (*)	9	853318	mounting axle body	5131 G4	di:12.1 do:71
5	53585	ball joint	3640 68	c:15.7					

Copyright 2021

DS5 (CITROEN)
DS 5 (DS)

11/2011 - 07/2015
07/2015 ->

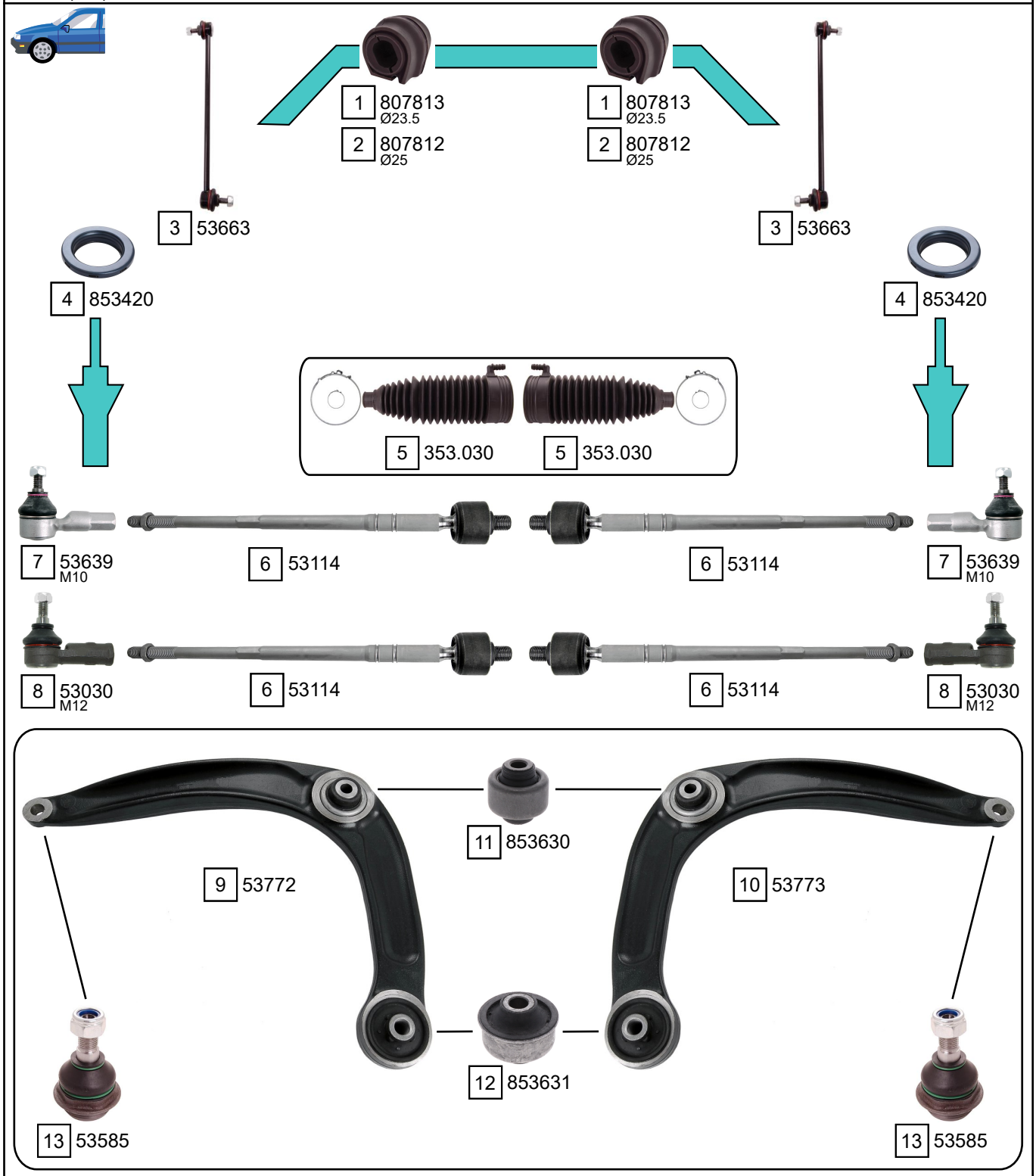

Ref.	Sidem Ref.	Description	OE-number	Measures	Ref.	Sidem Ref.	Description	OE-number	Measures
1	807813	stabiliser mounting	5094 F2	di:22	8	53030	tie rod end	3817 73	c:14.5 th:FM14X1.5R
2	807812	stabiliser mounting	5094 E7	di:21	9	53772	TCA left wobj	3520 Y3	c:15.2
3	53663	stabiliser link	5087 57	L:335	10	53773	TCA right wobj	3521 V4	c:15.2
4	853420	bearing	5035 27	di:65 do:99.5 L:20	11	853630	silentblock for TCA	3523 91	di:14.1 do:55.2 (*)
5	353.030	steering rack gaiter	4066 73	D:60 d:17 L:185	12	853631	silentblock for TCA	3523 92	di:14.2 do:55.3 (*)
6	53114	axial joint	3812 F7	th:MM14X1.5R L:387	13	53585	ball joint	3640 68	c:15.7
7	53639	tie rod end	3817 94	c:12.1 th:FM14X1.5R					

Copyright 2021

CITROEN
DS5

DS5 (CITROEN) 11/2011 - 07/2015
DS 5 (DS) 07/2015 ->

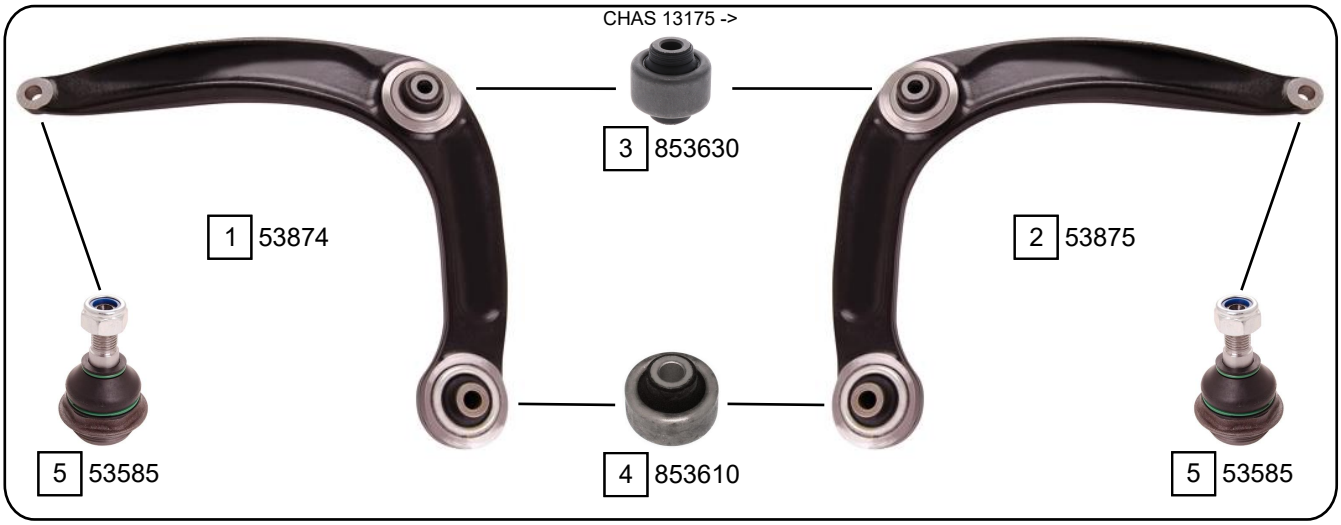

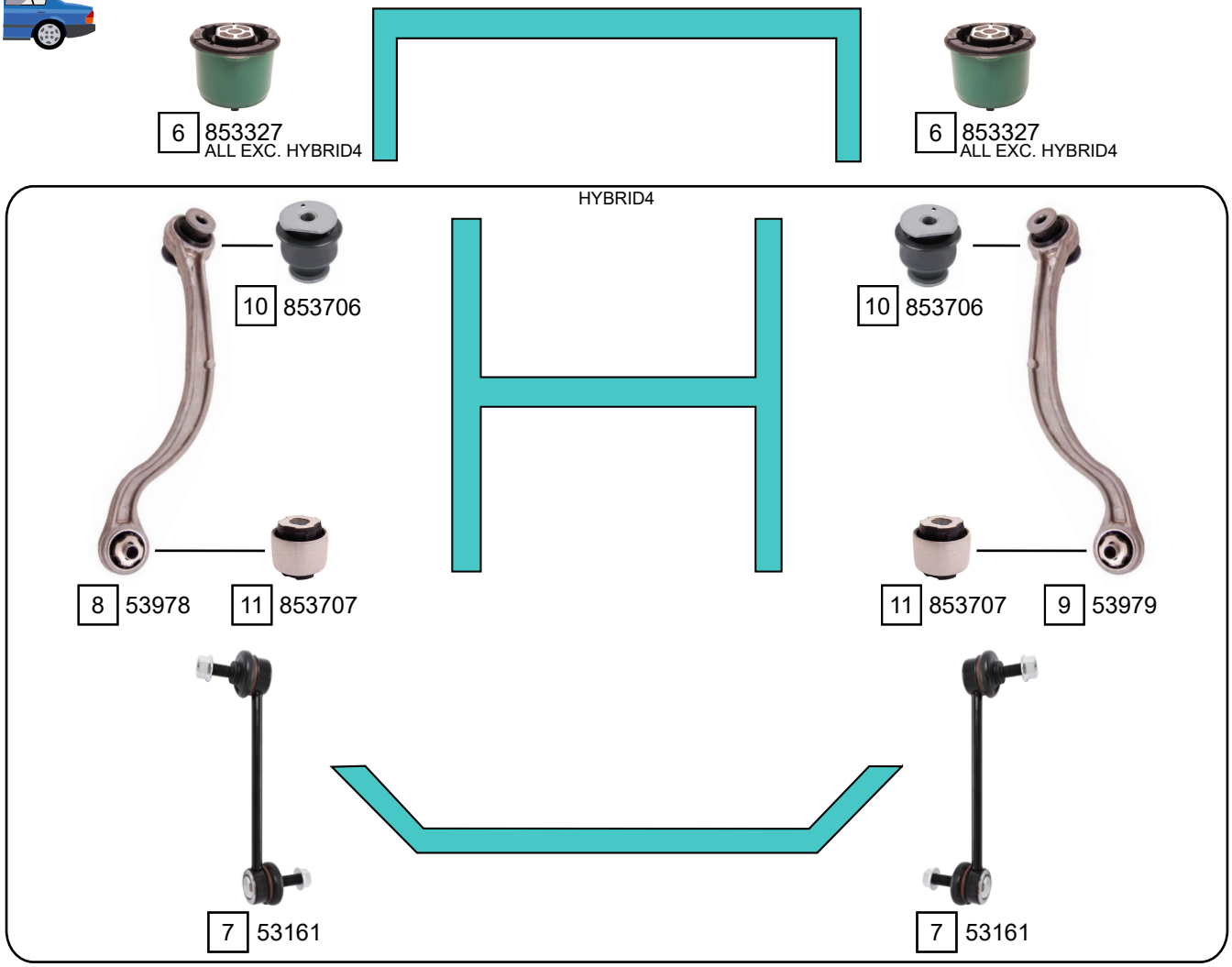

Ref.	Sidem Ref.	Description	OE-number	Measures	Ref.	Sidem Ref.	Description	OE-number	Measures
1	53874	TCA left wobj	98 067 383 80	c:15.2	7	53161	stabiliser link rear axle	5178 57	L:177
2	53875	TCA right wobj	98 067 382 80	c:15.2	8	53978	TCA left wobj	98 011 458 80	L:390
3	853630	silentblock for TCA	3523 91	di:14.1 do:55.2 (*)	9	53979	TCA right wobj	98 011 457 80	L:390
4	853610	silentblock for TCA	3523 76	di:14.2 do:55.3 (*)	10	853706	silentblock for TCA	98 010 499 80	di:14.4 do:55.8 (*)
5	53585	ball joint	3640 68	c:15.7	11	853707	silentblock for TCA	5131 C3	di:14.4 do:42.4 (*)
6	853327	mounting axle body	98 142 118 80	di:14.2 do:81					

Copyright 2021

DS 7 CROSSBACK (X74) 09/2017 ->

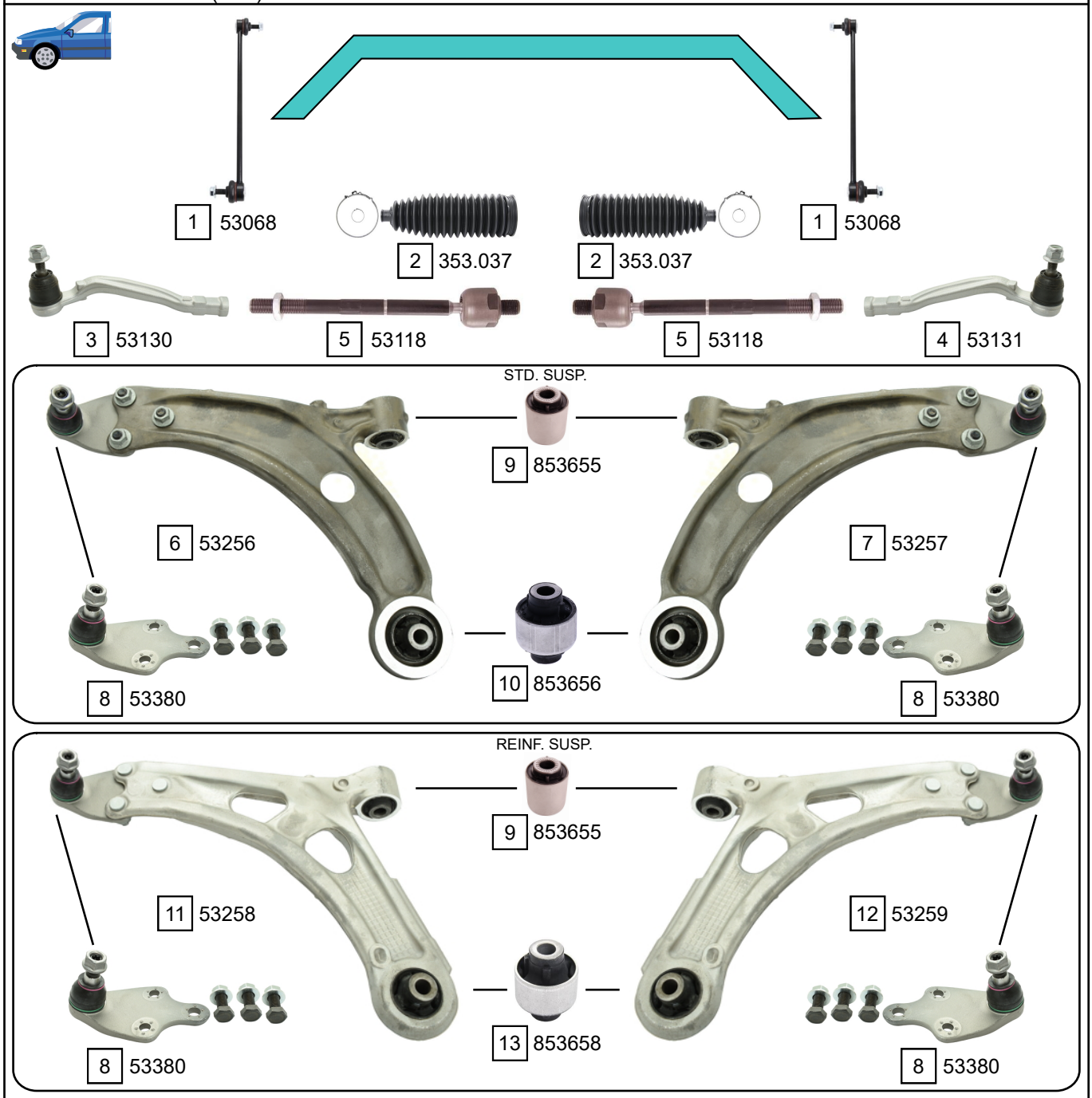

Ref.	Sidem Ref.	Description	OE-number	Measures	Ref.	Sidem Ref.	Description	OE-number	Measures
1	53068	stabiliser link	98 090 457 80	L:335	9	853655	silentblock for TCA	96 760 321 80	di:14.3 do:43.4 (*)
2	353.037	steering rack gaiter	16 108 175 80	D:51 d:12 L:186	10	853656	silentblock for TCA	96 760 352 80	di:14.1 do:50.3 (*)
3	53130	tie rod end left	16 372 806 80	c:14.5 th:FM14X1.5R	11	53258	TCA left wbj	98 150 146 80 S2	c:16.6
4	53131	tie rod end right	16 372 807 80	c:14.5 th:FM14X1.5R	12	53259	TCA right wbj	98 150 143 80 S2	c:16.6
5	53118	axial joint	16 108 176 80	th:MM14x1.5R L:225	13	853658	silentblock for TCA	98 163 803 80	di:14.2 do:50 (*)
6	53256	TCA left wbj	98 005 966 80 S3	c:16.6	14	53163	stabiliser link	98 152 270 80	L:170
7	53257	TCA right wbj	98 005 965 80 S3	c:16.6	15	53061	stabiliser link rear axle	5178 52	L:141
8	53380	ball joint	98 153 962 80	c:16.6					

Copyright 2021

CITROEN
EVASION

SIDEM
Experts know why

EVASION 06/1994 - 07/2002

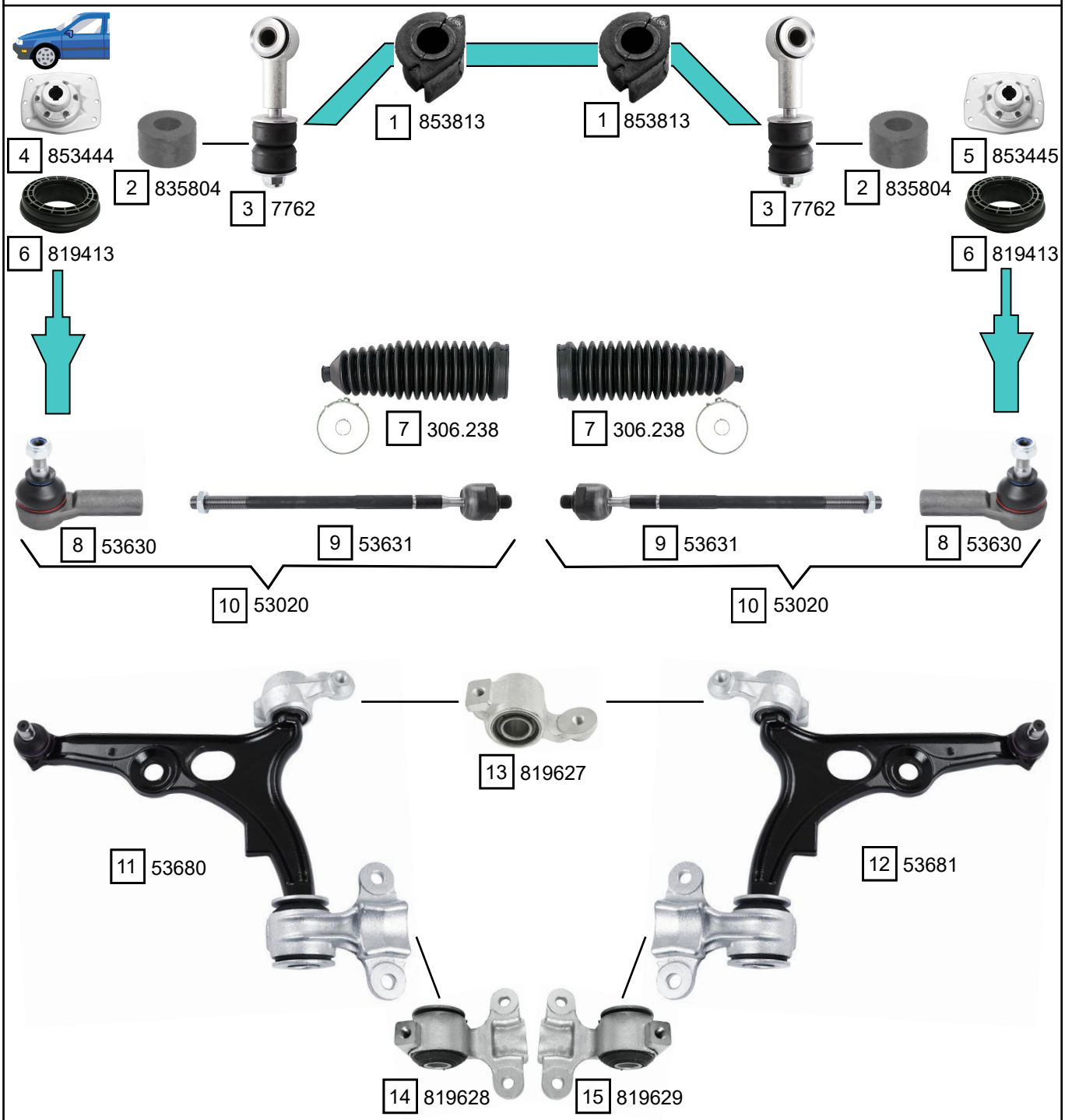

Ref.	Sidem Ref.	Description	OE-number	Measures	Ref.	Sidem Ref.	Description	OE-number	Measures
1	853813	stabiliser mounting	5094 69	di:24	9	53631	axial joint	3812 A4	th:MM14X1.5R L:306
2	835804	stabiliser mounting	5093 15	di:10.3	10	53020	tie rod	3812 A4 S1	c:12.7
3	7762	stabiliser link	5087 35	L:120	11	53680	TCA left wbj	3520 G9	c:17
4	853444	strut mount	5038 68	di:14.1	12	53681	TCA right wbj	3520 C5	c:17
5	853445	strut mount	5038 70	di:14.1	13	819627	silentblock for TCA	Part of	di:23 do:23 (*)
6	819413	bearing	5035 55	di:78 do:128 L:45.5	14	819628	silentblock for TCA	Part of	di:22.8 do:22.8 (*)
7	306.238	steering rack gaiter	4066 41	D:62 d:13 L:210	15	819629	silentblock for TCA	Part of	di:22.8 do:22.8 (*)
8	53630	tie rod end	4059 09	c:12.7 th:FM14x1.5R	16	853303	mounting axle body	5152 61	di:12 do:46

Copyright 2021

JUMPER I 02/1994 - 04/2002

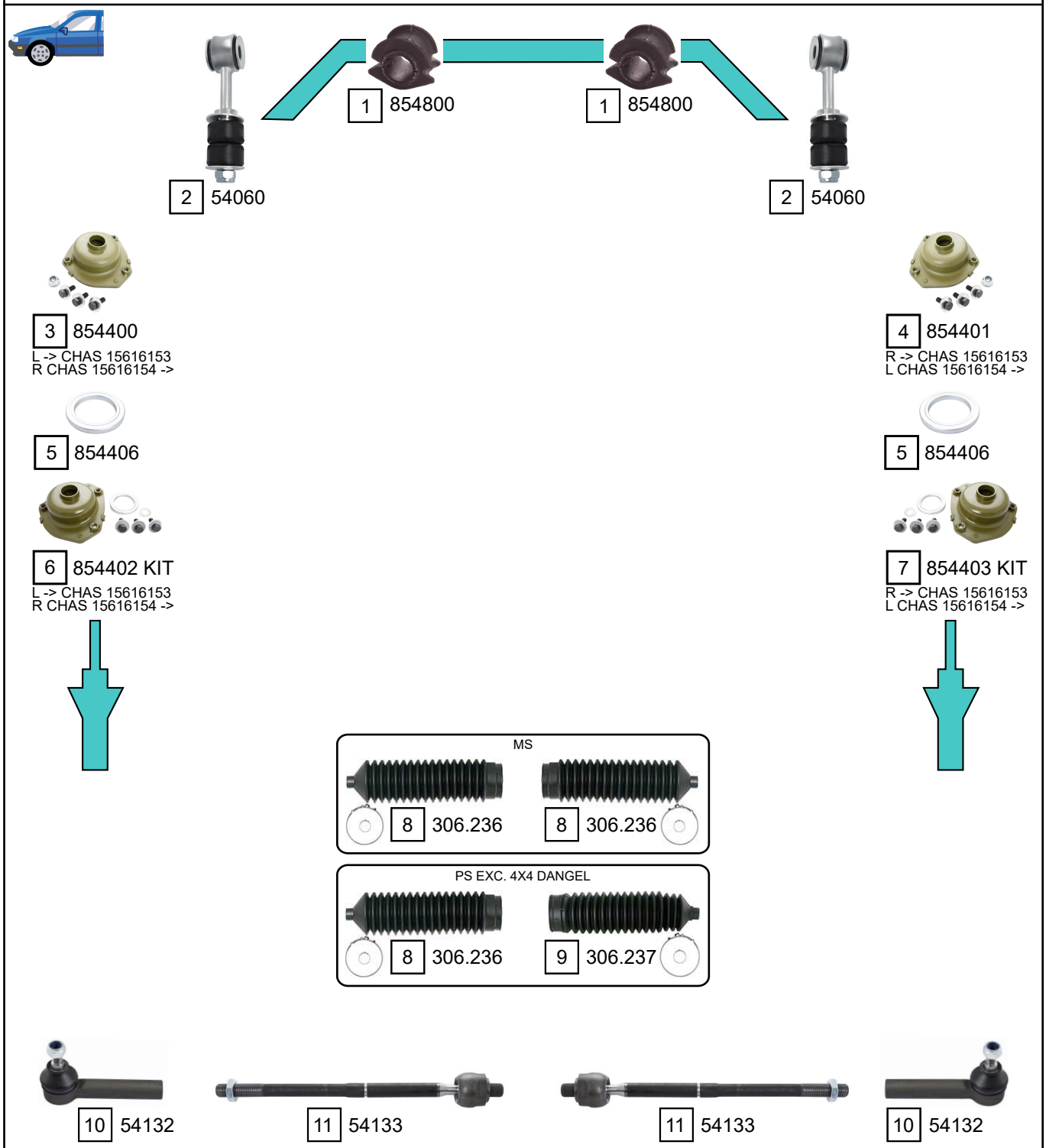

Ref.	Sidem Ref.	Description	OE-number	Measures	Ref.	Sidem Ref.	Description	OE-number	Measures
1	854800	stabiliser mounting	Part of	di:23	7	854403 KIT	strut mount kit	5031 71	di:14.3 do:79
2	54060	stabiliser link	5087 37	L:134	8	306.236	steering rack gaiter	4018 A5	D:53 d:15 L:260
3	854400	strut mount	5038 72	di:14.3 do:79 L:76	9	306.237	steering rack gaiter	4066 35	D:62 d:15 L:270
4	854401	strut mount	5038 74	di:14.3 do:79 L:75	10	54132	tie rod end	4018 A3	c:14.4 th:FM16X1.5R
5	854406	bearing	16 202 985 80	di:49.1 do:70.3 L:8.3	11	54133	axial joint	4018 A4	th:MM16X1.5R L:315
6	854402 KIT	strut mount kit	5031 70	di:14.3 do:79 L:76					

Copyright 2021

CITROEN
JUMPER

JUMPER I 02/1994 - 04/2002

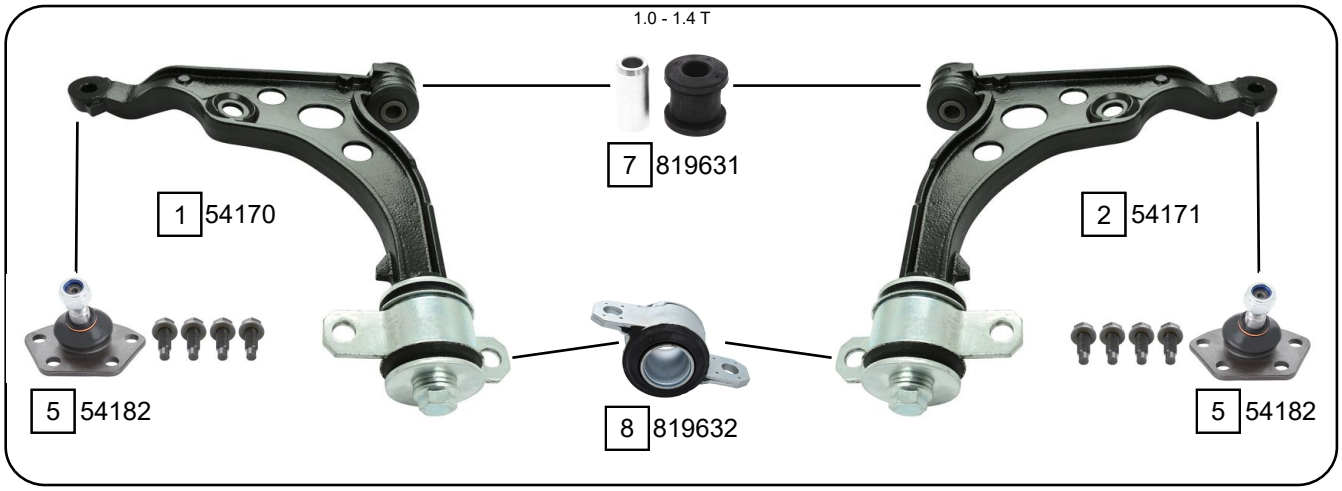

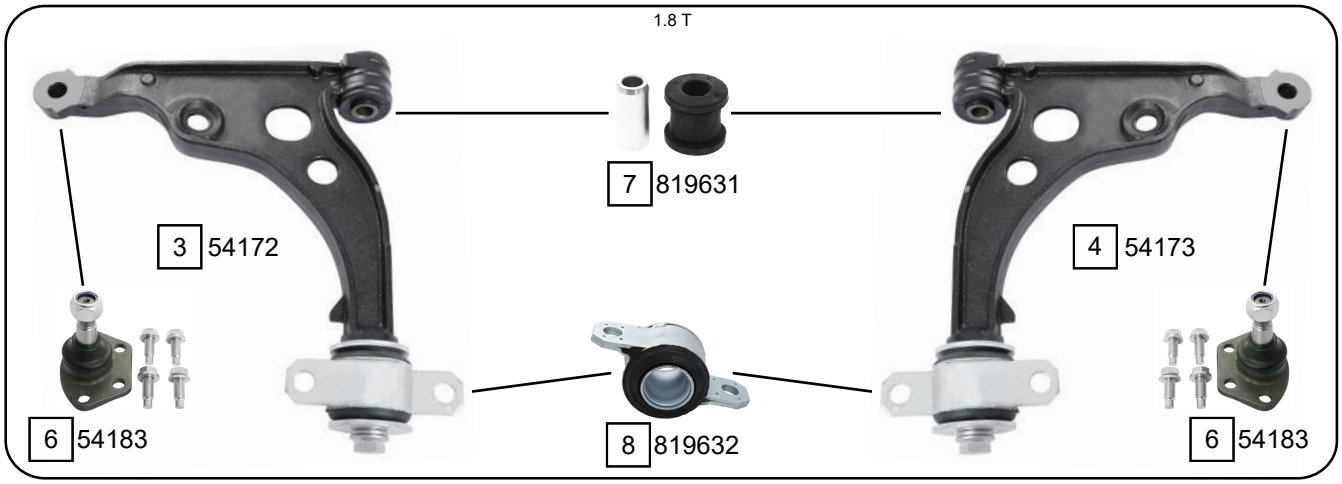

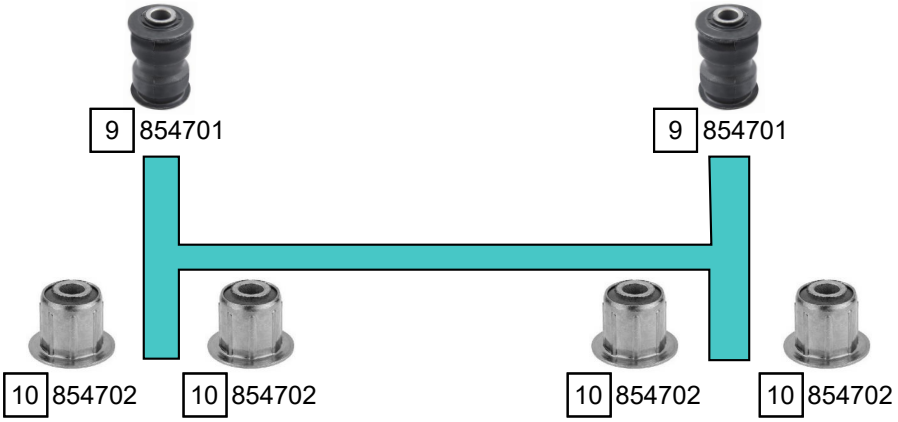

Ref.	Sidem Ref.	Description	OE-number	Measures	Ref.	Sidem Ref.	Description	OE-number	Measures
1	54170	TCA left wobj	3520 95	c:16	6	54183	ball joint	3640 33	c:19.5
2	54171	TCA right wobj	3521 65	c:16	7	819631	silentblock for TCA	3523 93 S1	di:25 do:44.5 (*)
3	54172	TCA left wobj	3520 96	c:19.2	8	819632	silentblock for TCA	3523 AP	di:34.2 do:34.2 (*)
4	54173	TCA right wobj	3521 66	c:19.2	9	854701	spring bush	5131 73	di:16.1 do:50
5	54182	ball joint	3640 32	c:17.1	10	854702	mounting axle body	5131 72	di:41.6

Copyright 2021

JUMPER II 04/2002 - 06/2006

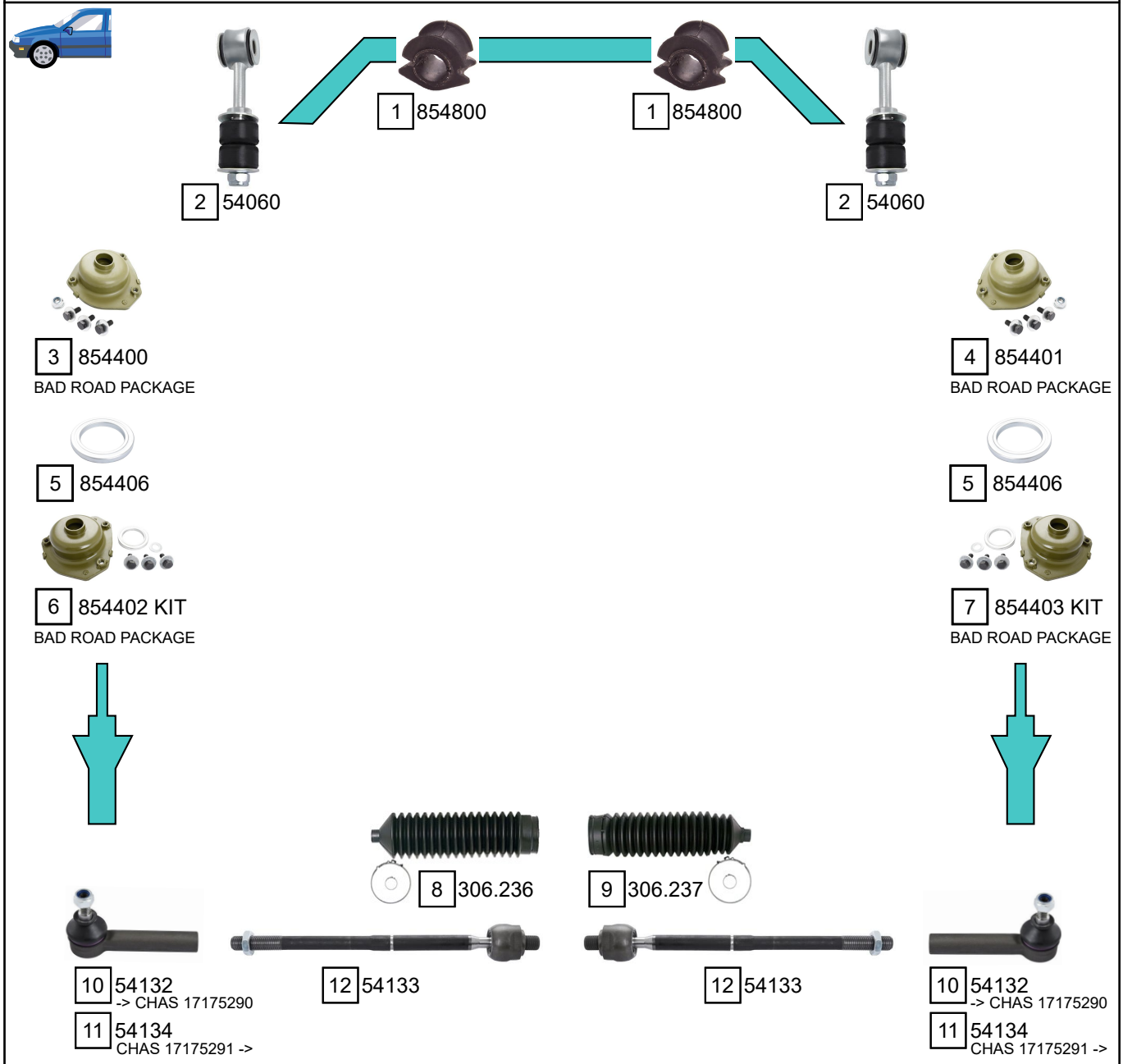

Ref.	Sidem Ref.	Description	OE-number	Measures	Ref.	Sidem Ref.	Description	OE-number	Measures
1	854800	stabiliser mounting	Part of	di:23	7	854402 KIT	strut mount kit	5031 70	di:14.3 do:79 L:76
2	54060	stabiliser link	5087 37	L:134	8	306.236	steering rack gaiter	4018 A5	D:53 d:15 L:260
3	854401	strut mount	5038 74	di:14.3 do:79 L:75	9	306.237	steering rack gaiter	4066 35	D:62 d:15 L:270
4	854400	strut mount	5038 72	di:14.3 do:79 L:76	10	54132	tie rod end	4018 A3	c:14.4 th:FM16X1.5R
5	854406	bearing	16 202 985 80	di:49.1 do:70.3 L:8.3	11	54134	tie rod end	4018 E0	c:17 th:FM16x1.5R
6	854403 KIT	strut mount kit	5031 71	di:14.3 do:79	12	54133	axial joint	4018 A4	th:MM16X1.5R L:315

Copyright 2021

CITROEN
JUMPER

JUMPER II 04/2002 - 06/2006

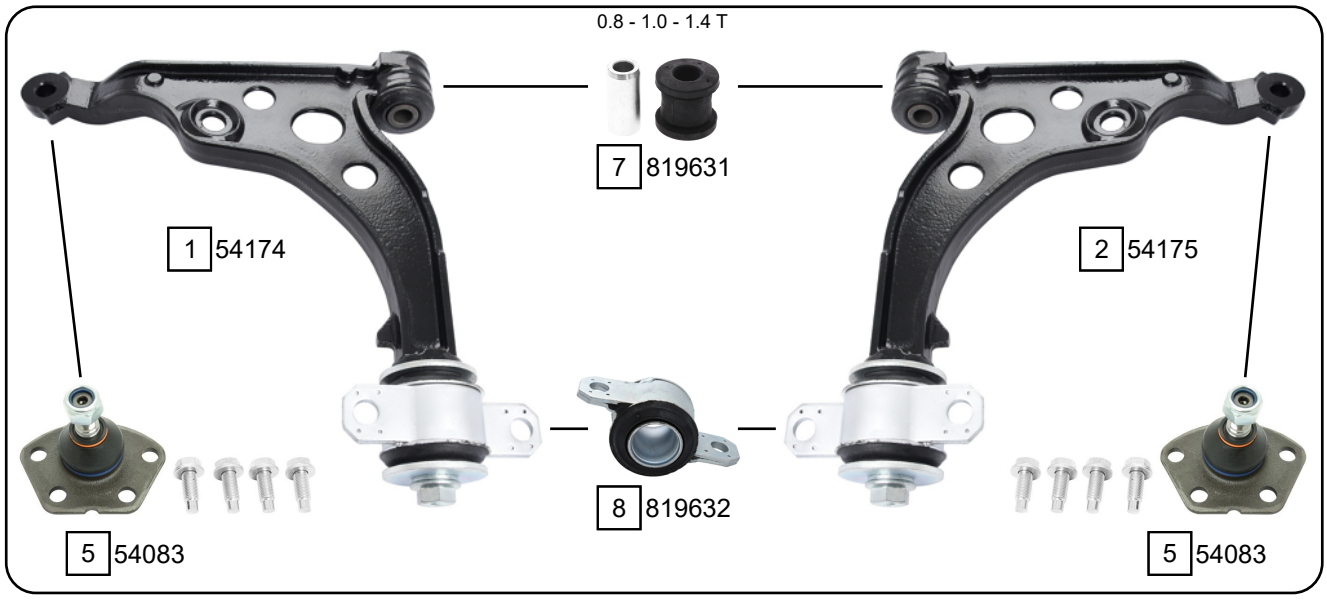

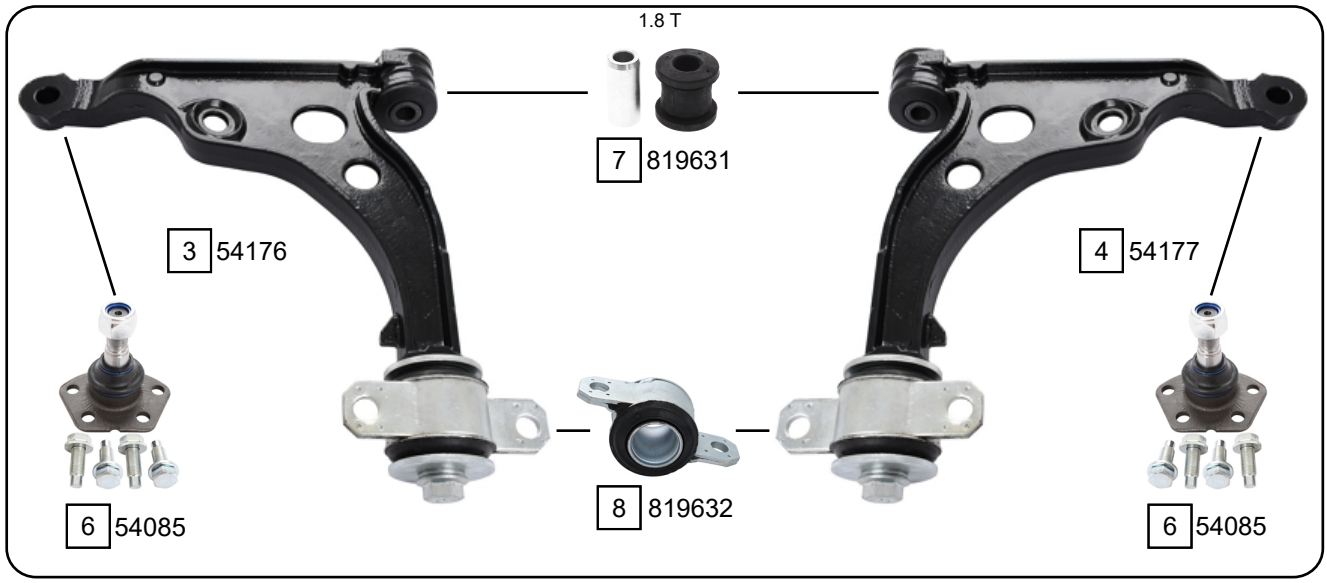

Ref.	Sidem Ref.	Description	OE-number	Measures	Ref.	Sidem Ref.	Description	OE-number	Measures
1	54174	TCA left wobj	3520 N3	c:16	5	54083	ball joint	3640 55	c:17
2	54175	TCA right wobj	3521 J3	c:16	6	54085	ball joint	3640 54	c:19.8
3	54176	TCA left wobj	3520 N4	c:19.3	7	819631	silentblock for TCA	3523 93 S1	di:25 do:44.5 (*)
4	54177	TCA right wobj	3521 J4	c:19.3	8	819632	silentblock for TCA	3523 AP	di:34.2 do:34.2 (*)

Copyright 2021

JUMPER III 04/2006 ->

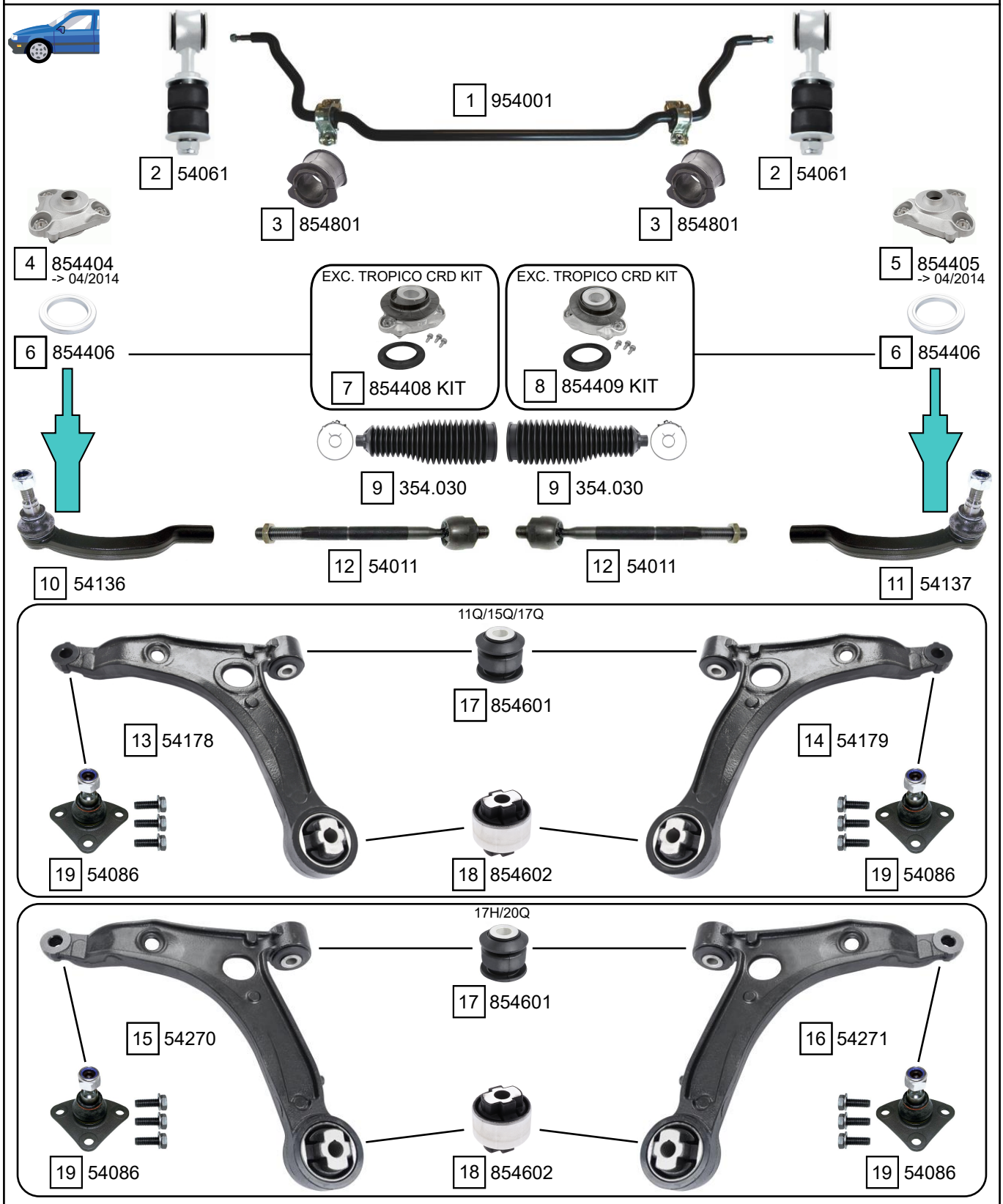

Ref.	Sidem Ref.	Description	OE-number	Measures	Ref.	Sidem Ref.	Description	OE-number	Measures
1	954001	stabilizer bar	16 127 364 80	do:26.2 L:1398	11	54137	tie rod end right	16 109 763 80	c:16.6 th:FM16x1.5R
2	54061	stabiliser link	Part of	L:112	12	54011	axial joint	Part of	th:MM16X1.5R L:260
3	854801	stabiliser mounting	Part of	di:24.5	13	54178	TCA left wobj	3520 S0	c:23.6
4	854404	strut mount	16 076 912 80	di:14.2 do:86	14	54179	TCA right wobj	3521 P1	c:23.6
5	854405	strut mount	Part of	di:14.2	15	54270	TCA left wobj	3520 S1	c:23.6
6	854406	bearing	16 202 985 80	di:49.1 do:70.3 L:8.3	16	54271	TCA right wobj	3521 P2	c:23.6
7	854408 KIT	strut mount kit	Part of	di:14.2	17	854601	silentblock for TCA	Part of	di:18.5 do:56.8 (*)
8	854409 KIT	strut mount kit	Part of	di:14.2	18	854602	silentblock for TCA	Part of	di:20 do:74.2 (*)
9	354.030	steering rack gaiter	4066 86	D:55 d:14 L:225	19	54086	ball joint	3640 67	c:20.5
10	54136	tie rod end left	16 109 764 80	c:16.6 th:FM16X1.5R					

Copyright 2021

CITROEN
JUMPER

JUMPER III 04/2006 ->

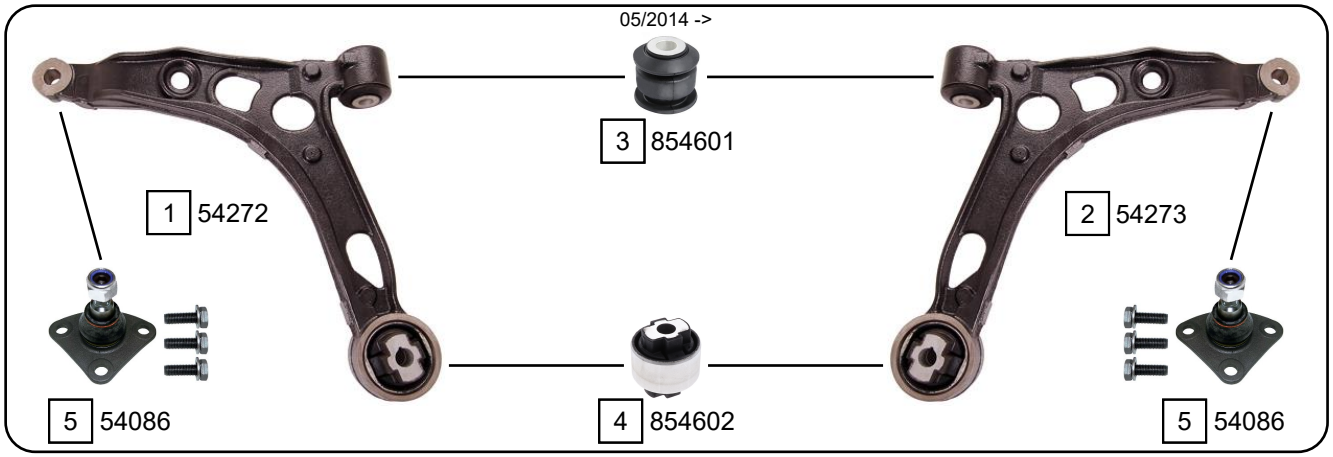

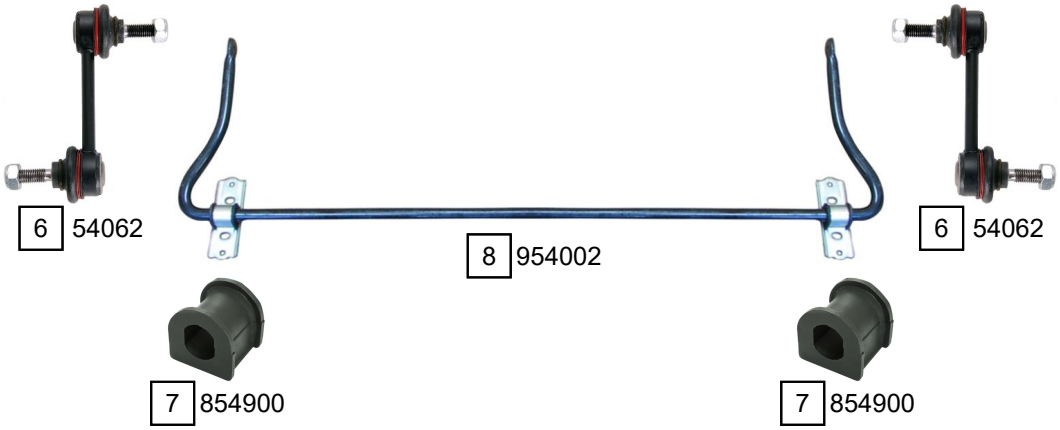

Ref.	Sidem Ref.	Description	OE-number	Measures	Ref.	Sidem Ref.	Description	OE-number	Measures
1	54272	TCA wobj	16 127 356 80	c:23.6	5	54086	ball joint	3640 67	c:20.5
2	54273	TCA wobj	16 127 355 80	c:23.6	6	54062	stabiliser link rear axle	Part of	L:100
3	854601	silentblock for TCA	Part of	di:18.5 do:56.8 (*)	7	854900	stabiliser mounting	Part of	di:19.5
4	854602	silentblock for TCA	Part of	di:20 do:74.2 (*)	8	954002	stabilizer bar	16 080 782 80	

Copyright 2021

JUMPY
DISPATCH

06/1994 - 01/2007

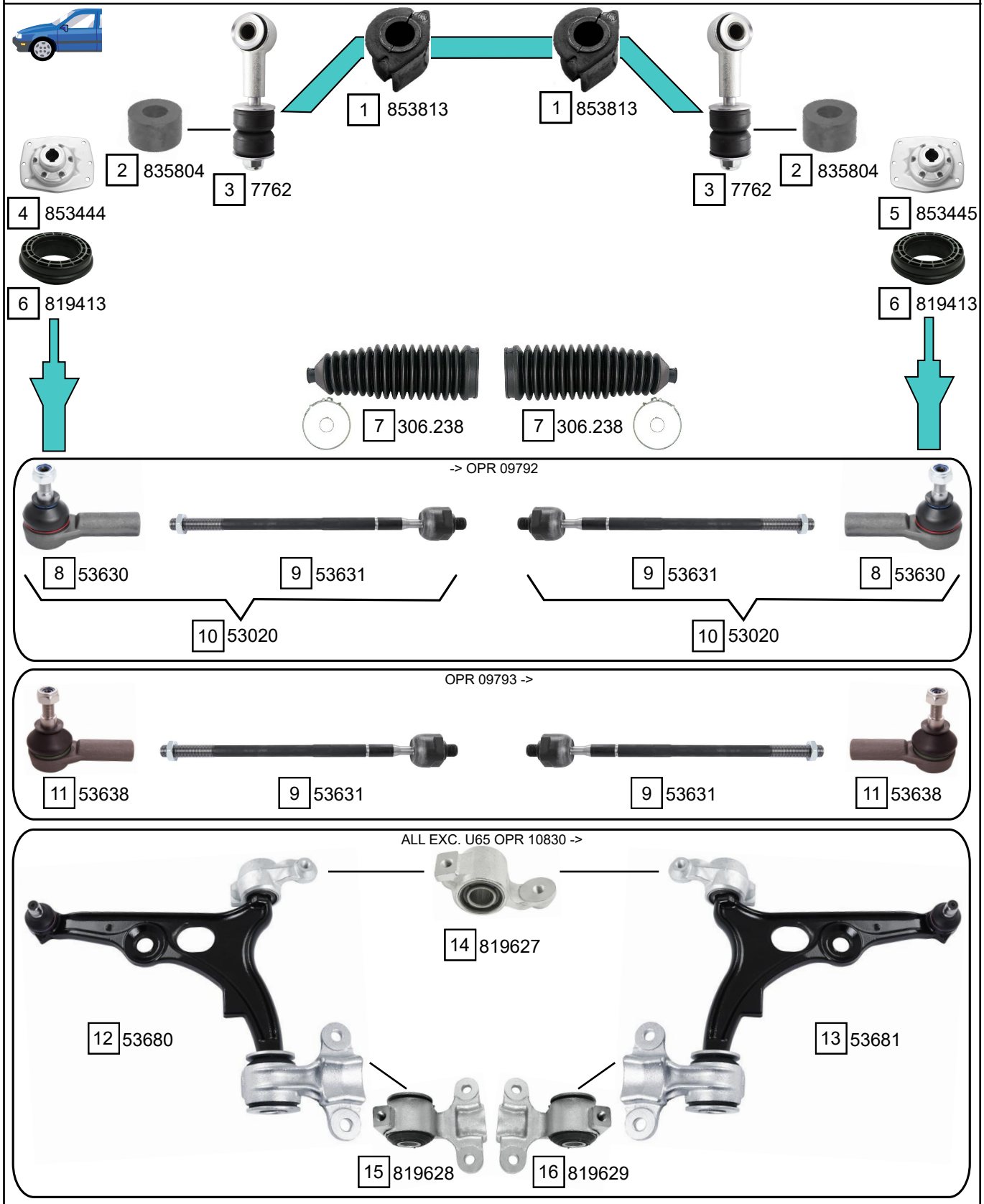

Ref.	Sidem Ref.	Description	OE-number	Measures	Ref.	Sidem Ref.	Description	OE-number	Measures
1	853813	stabiliser mounting	5094 69	di:24	9	53631	axial joint	3812 A4	th:MM14X1.5R L:306
2	835804	stabiliser mounting	5093 15	di:10.3	10	53020	tie rod	3812 A4 S1	c:12.7
3	7762	stabiliser link	5087 35	L:120	11	53638	tie rod end	4059 12	c:13.6 th:FM14x1.5R
4	853444	strut mount	5038 68	di:14.1	12	53680	TCA left wbj	3520 G9	c:17
5	853445	strut mount	5038 70	di:14.1	13	53681	TCA right wbj	3520 C5	c:17
6	819413	bearing	5035 55	di:78 do:128 L:45.5	14	819627	silentblock for TCA	Part of	di:23 do:23 (*)
7	306.238	steering rack gaiter	4066 41	D:62 d:13 L:210	15	819628	silentblock for TCA	Part of	di:22.8 do:22.8 (*)
8	53630	tie rod end	4059 09	c:12.7 th:FM14x1.5R	16	819629	silentblock for TCA	Part of	di:22.8 do:22.8 (*)

Copyright 2021

CITROEN
JUMPY - DISPATCH

JUMPY
DISPATCH

06/1994 - 01/2007

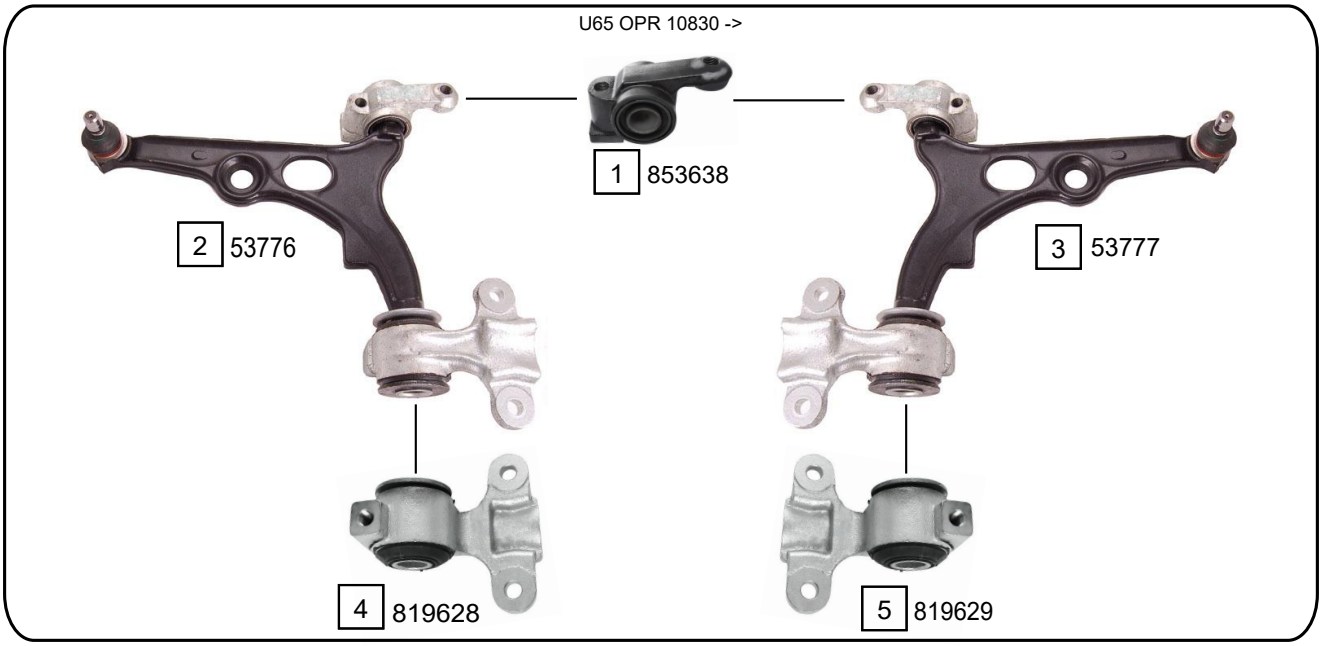

Ref.	Sidem Ref.	Description	OE-number	Measures	Ref.	Sidem Ref.	Description	OE-number	Measures
1	853638	silentblock for TCA	Part of	di:22.9 (*)	4	819628	silentblock for TCA	Part of	di:22.8 do:22.8 (*)
2	53776	TCA left wbj	3520 S6	c:17	5	819629	silentblock for TCA	Part of	di:22.8 do:22.8 (*)
3	53777	TCA right wbj	3521 P7	c:17	6	853303	mounting axle body	5152 61	di:12 do:46

Copyright 2021

JUMPY
DISPATCH

01/2007 ->

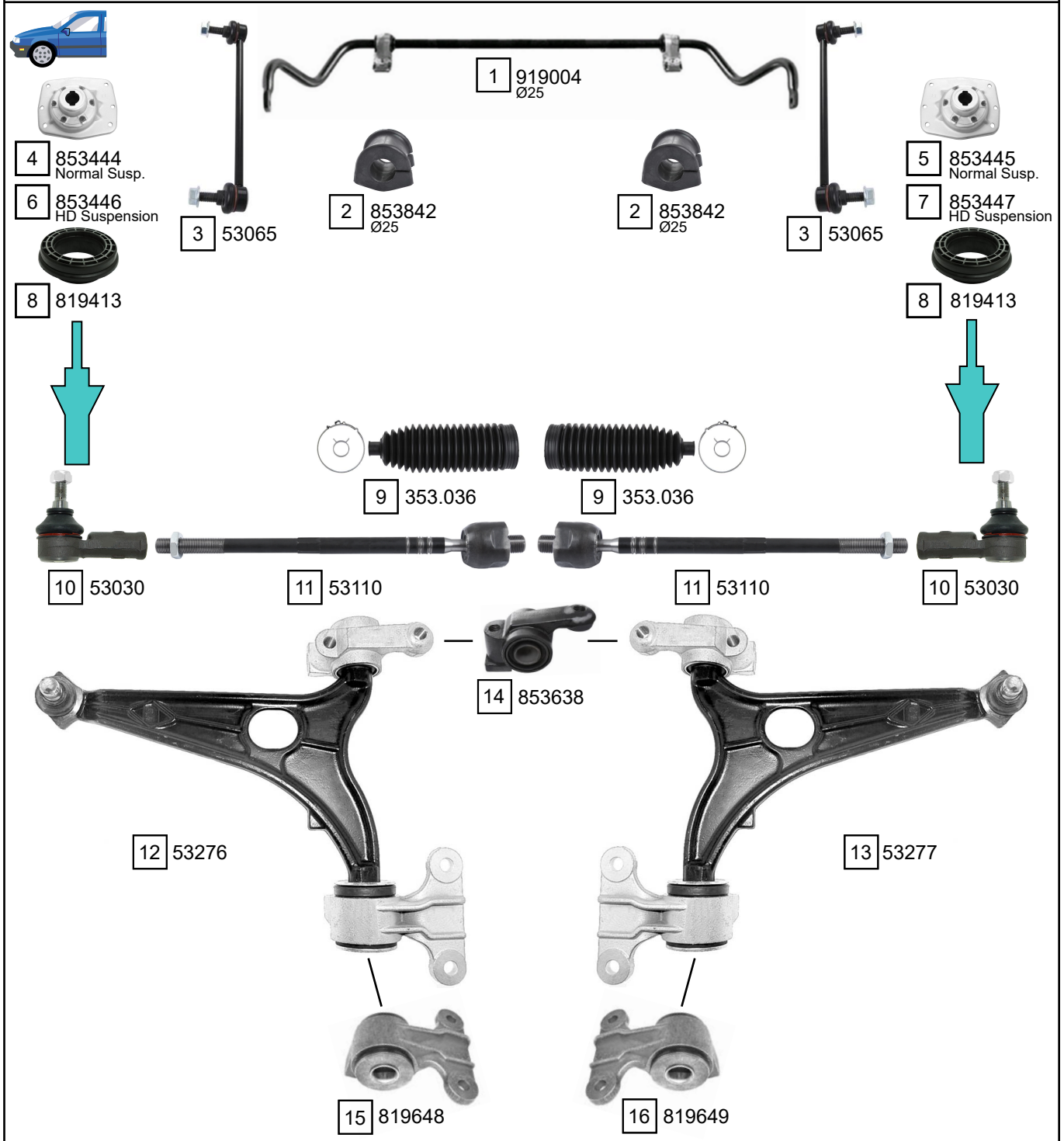

Ref.	Sidem Ref.	Description	OE-number	Measures	Ref.	Sidem Ref.	Description	OE-number	Measures
1	919004	stabilizer bar	14 401 772 80	do:25 L:1140	10	53030	tie rod end	3817 73	c:14.5 th:FM14X1.5R
2	853842	stabiliser mounting	Part of	di:24	11	53110	axial joint	3812 F0	th:MM16X1.5R L:306
3	53065	stabiliser link	5087 56	L:263	12	53276	TCA left wbj	3520 R8	c:19
4	853444	strut mount	5038 68	di:14.1	13	53277	TCA right wbj	3521 N9	c:19
5	853445	strut mount	5038 70	di:14.1	14	853638	silentblock for TCA	Part of	di:22.9 (*)
6	853446	strut mount	5038 F1	di:14.3	15	819648	silentblock for TCA	Part of	di:22.9 do:22.9 (*)
7	853447	strut mount	5038 F2	di:14.3	16	819649	silentblock for TCA	Part of	di:22.9 do:22.9 (*)
8	819413	bearing	5035 55	di:78 do:128 L:45.5	17	853325	mounting axle body	5131 F4	di:16.3 do:68
9	353.036	steering rack gaiter	4066 83	D:54.5 d:13.5 L:185					

Copyright 2021

CITROEN
JUMPY - DISPATCH

JUMPY
DISPATCH

04/2016 ->

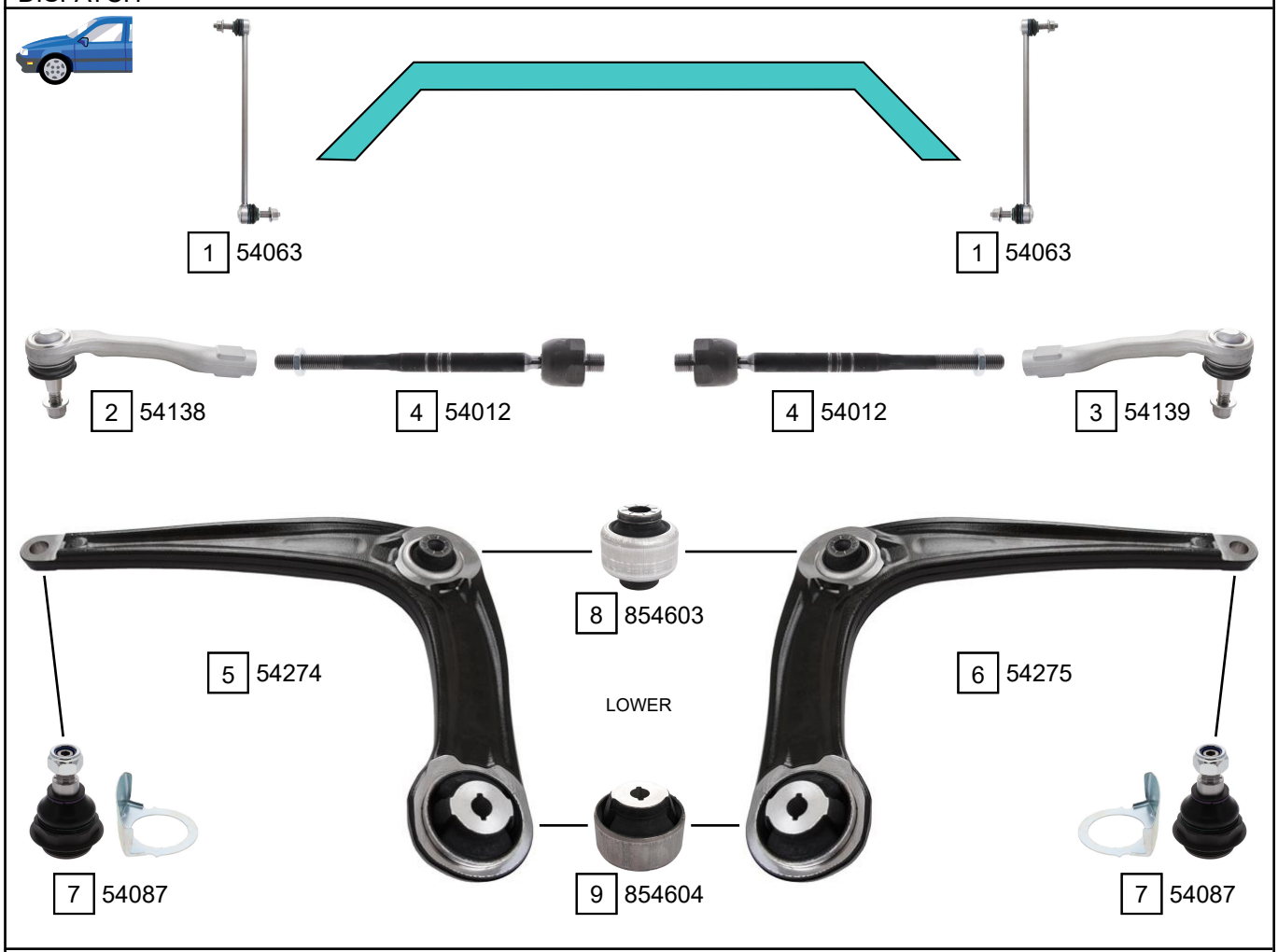

Ref.	Sidem Ref.	Description	OE-number	Measures	Ref.	Sidem Ref.	Description	OE-number	Measures
1	54063	stabiliser link	98 090 901 80	L:355	8	854603	silentblock for TCA	98 090 826 80	di:16.1 do:58 (*)
2	54138	tie rod end left	98 203 400 80	c:14.2 th:FM14X1.5R	9	854604	silentblock for TCA	98 165 579 80	di:14.3 do:70.5 (*)
3	54139	tie rod end right	98 203 401 80	c:14.2 th:FM14X1.5R	10	854300	mounting axle body	98 148 540 80	di:16.4 do:73
4	54012	axial joint	Part of	th:MM16X1.5R L:265	11	854301	mounting axle body	98 148 541 80	di:14.4 do:73.5
5	54274	TCA left wobj	98 168 636 80	c:18.2	12	854302	mounting axle body	98 148 542 80	di:16.4 do:73
6	54275	TCA right wobj	98 168 635 80	c:18.2	13	854303	mounting axle body	98 148 543 80	di:14.4 do:73.5
7	54087	ball joint	98 345 990 80 S1	c:18.6	14	54064	stabiliser link	98 056 213 80	L:80

Copyright 2021

LNA 11/1976 - 10/1986

1 306.033

1 306.033

2 53234

2 53234

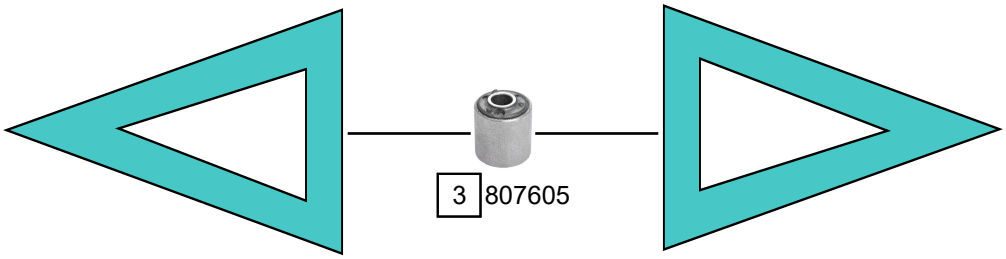

3 807605

Ref.	Sidem Ref.	Description	OE-number	Measures	Ref.	Sidem Ref.	Description	OE-number	Measures
1	306.033	steering rack gaiter	4066 20	D:40 d:10 L:175	3	807605	silentblock for TCA	3523 20	di:10 do:28 (*)
2	53234	tie rod end	3817 50	c:12 th:MM14X1.5R					

Copyright 2021

CITROEN
NEMO

NEMO (A9) 02/2008 ->

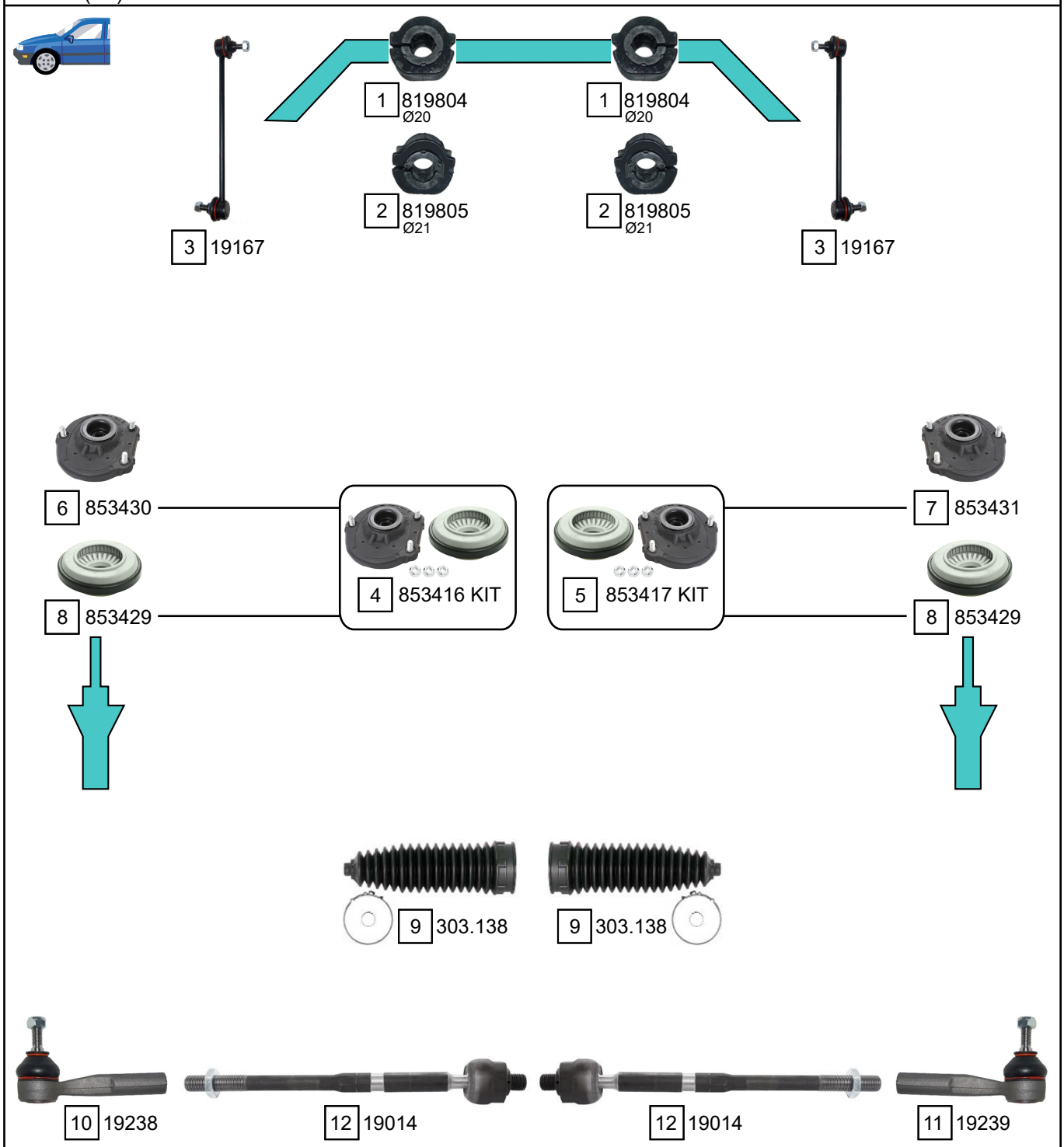

Ref.	Sidem Ref.	Description	OE-number	Measures	Ref.	Sidem Ref.	Description	OE-number	Measures
1	819804	stabiliser mounting	5094 C8	di:19	7	853431	strut mount	Part of	di:12.1 do:52 L:62
2	819805	stabiliser mounting	5094 E5	di:20	8	853429	bearing	16 139 807 80	di:33 do:112.5 L:38.4
3	19167	stabiliser link	5087 79	L:290	9	303.138	steering rack gaiter	4066 95	D:55 d:12 L:200
4	853416 KIT	strut mount kit	5038 J7	di:12.1 do:52 L:32.8	10	19238	tie rod end left	3817 86	c:11.6 th:FM14X1.5R
5	853417 KIT	strut mount kit	5038 J8	di:12.1 do:52 L:32.8	11	19239	tie rod end right	3817 87	c:11.6 th:FM14X1.5R
6	853430	strut mount	Part of	di:12.1 do:52 L:32.8	12	19014	axial joint	Part of	th:MM14x1.5R L:270

Copyright 2021

NEMO (A9) 02/2008 ->

-> 05/2010

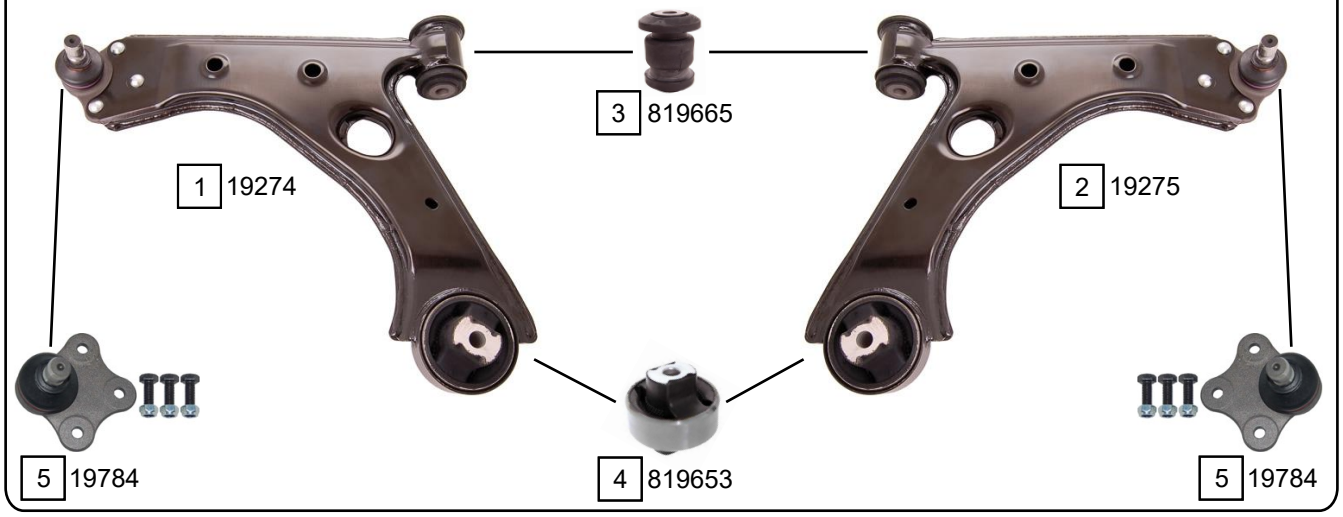

06/2010 ->

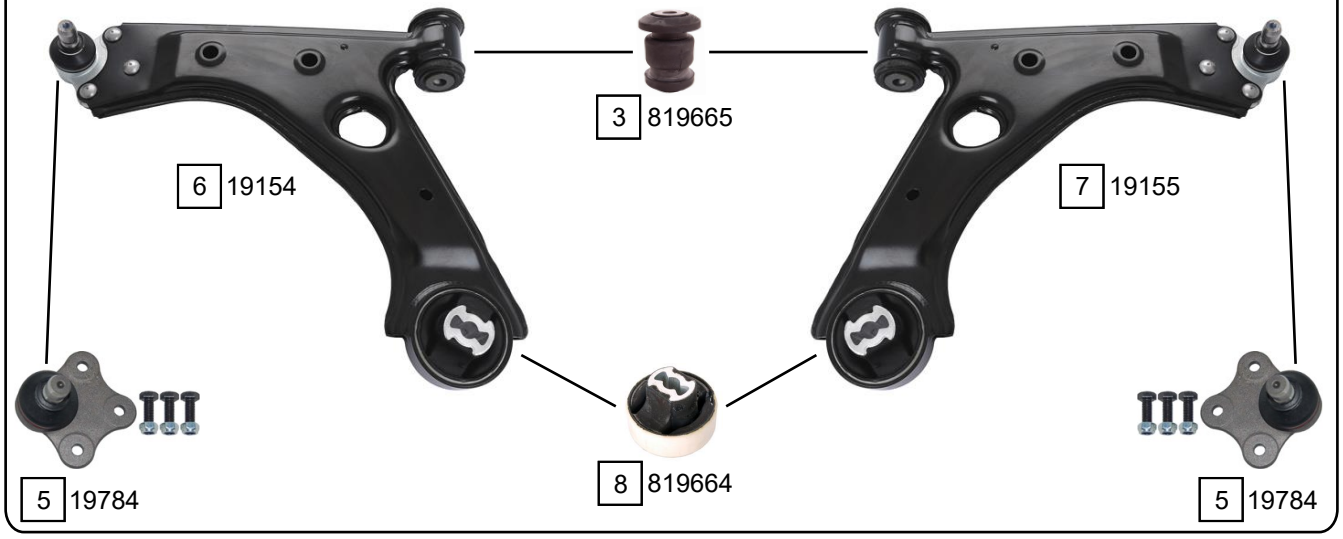

Ref.	Sidem Ref.	Description	OE-number	Measures	Ref.	Sidem Ref.	Description	OE-number	Measures
1	19274	TCA left wbj	3520 W3	c:16	6	19154	TCA left wbj	16 180 675 80	c:16
2	19275	TCA right wbj	3521 S6	c:16	7	19155	TCA right wbj	16 180 674 80	c:16
3	819665	silentblock for TCA	Part of	di:12.1 do:42.4 (*)	8	819664	silentblock for TCA	Part of	di:12.4 do:70.6 (*)
4	819653	silentblock for TCA	Part of	di:12.2 do:71 (*)	9	819300	mounting axle body	5131 G8	di:13 do:69.5
5	19784	ball joint	3 52 087	c:16					

Copyright 2021

CITROEN
SAXO

SIDEM Experts know why

SAXO (EXC. VTS-VTR) 05/1996 - 10/2003

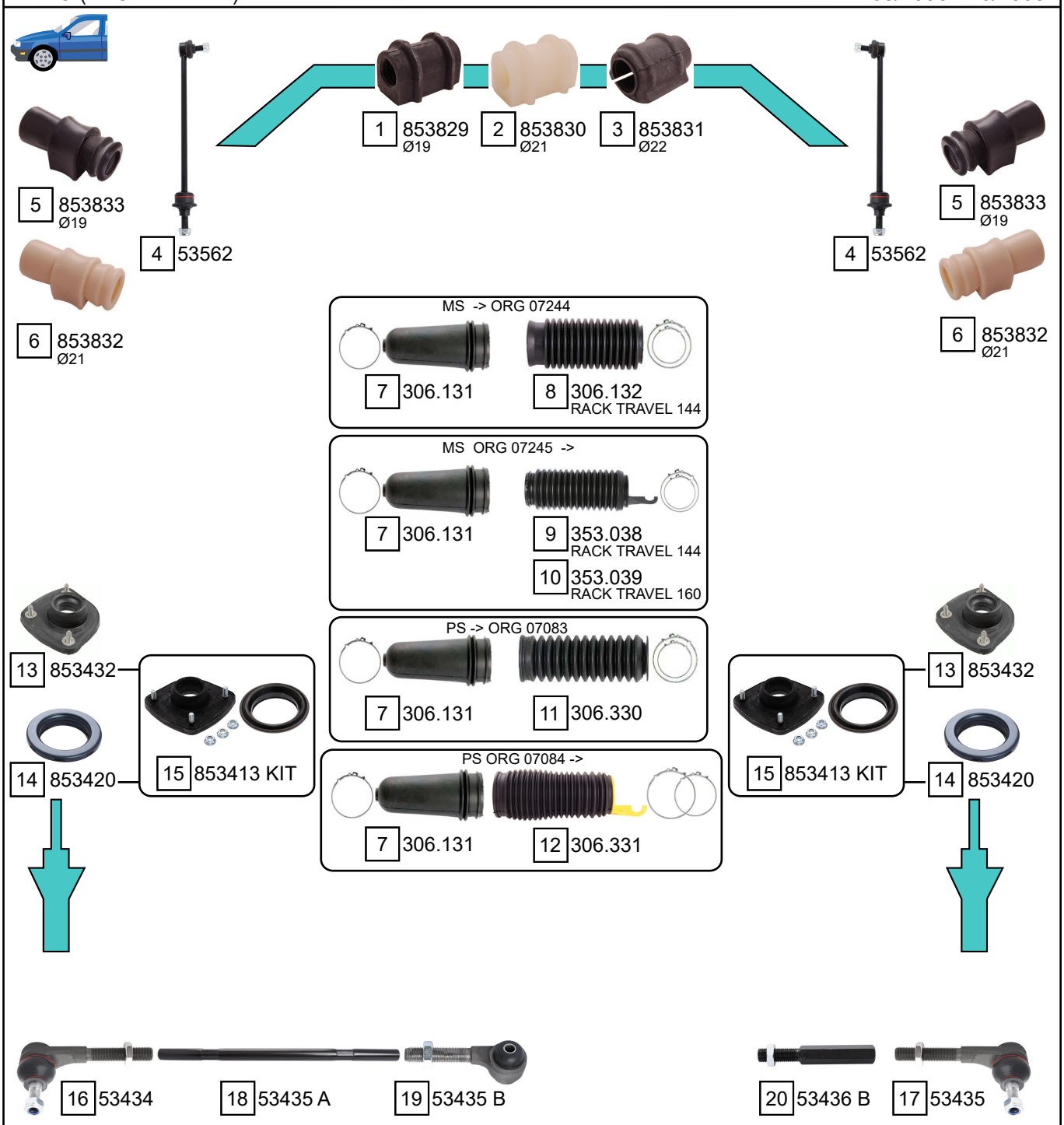

Ref.	Sidem Ref.	Description	OE-number	Measures	Ref.	Sidem Ref.	Description	OE-number	Measures
1	853829	stabiliser mounting	5094 56	di:18.4	11	306.330	steering rack gaiter	4066 36	D:42 L:132
2	853830	stabiliser mounting	5094 57	di:20.3	12	306.331	steering rack gaiter	4066 50	D:45 d:22 L:120
3	853831	stabiliser mounting	5094 71	di:21.6	13	853432	strut mount	5038 15	di:31.5 do:64 L:36.5
4	53562	stabiliser link	5087 40	L:323	14	853420	bearing	5035 27	di:65 do:99.5 L:20
5	853833	stabiliser mounting	5094 59	di:19.5	15	853413 KIT	strut mount kit	5031 53	di:31.5 do:64 L:36.5
6	853832	stabiliser mounting	5094 60	di:20.5	16	53434	tie rod end	3817 41	c:12.1 th:MM14x1.5R
7	306.131	steering rack gaiter	4066 32	D:40 d:12 L:106	17	53435	tie rod end	3817 42	c:12.1 th:MM14x1.5R
8	306.132	steering rack gaiter	4066 34	D:38 d:20 L:134	18	53435 A	connecting piece	3812 A0	L:381
9	353.038	steering rack gaiter	4066 48	D:39 d:38 L:138	19	53435 B	axial joint	3817 32	L:90
10	353.039	steering rack gaiter	4066 49	D:39 d:38 L:138	20	53436 B	connecting piece	3817 34	L:133

Copyright 2021

SAXO (EXC. VTS-VTR) 05/1996 - 10/2003

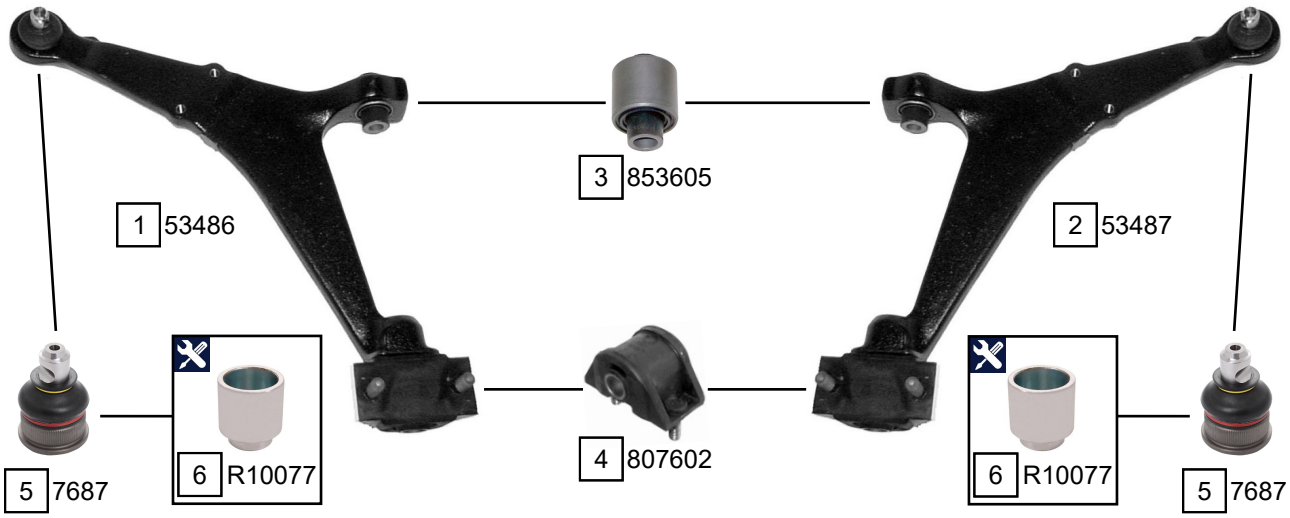

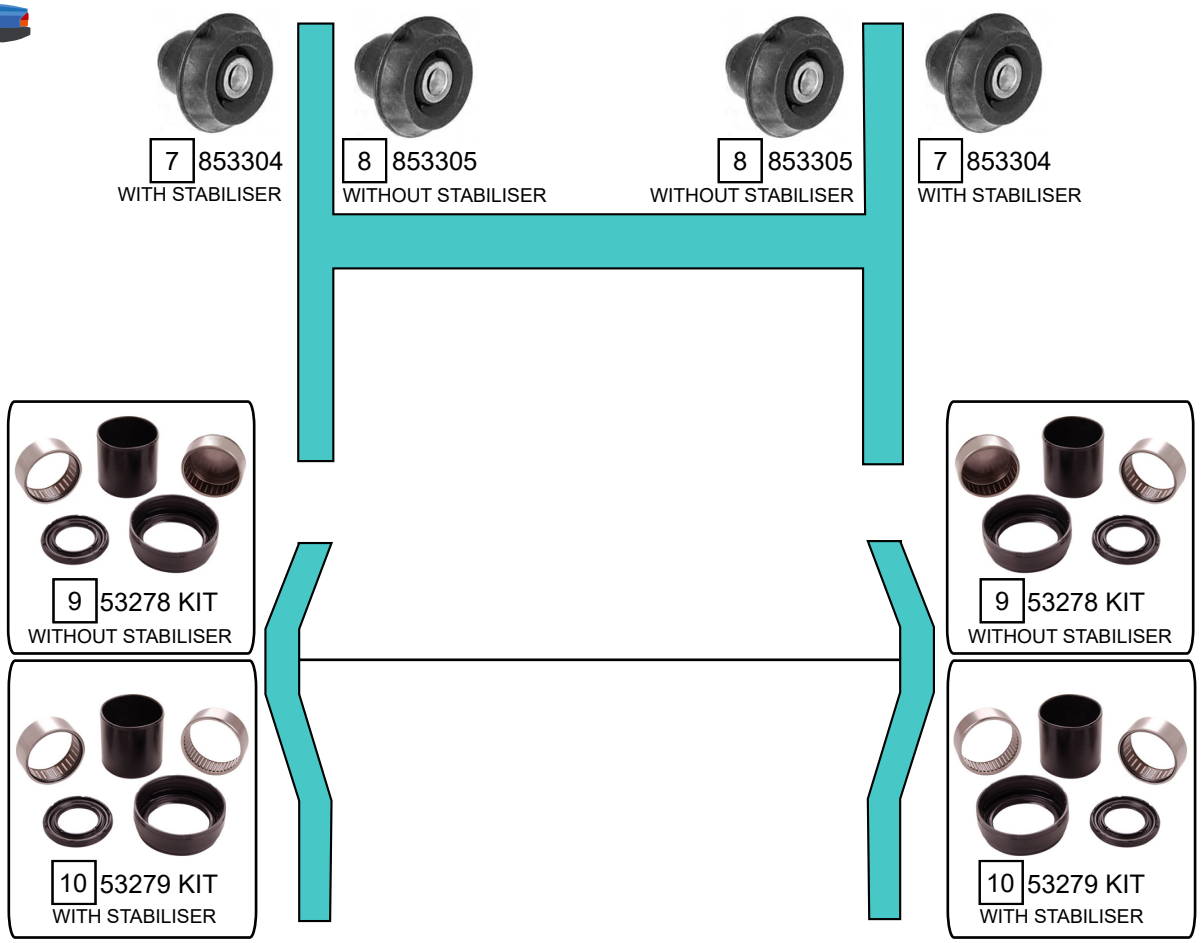

Ref.	Sidem Ref.	Description	OE-number	Measures	Ref.	Sidem Ref.	Description	OE-number	Measures
1	53486	TCA left wbj	3520 78	c:16	6	R10077	mounting tool ring ø42 ø34	SEE PAGE III	di:34 do:42
2	53487	TCA right wbj	3520 79	c:16	7	853304	mounting axle body	5131 63	di:12 do:33.4
3	853605	silentblock for TCA	3523 50	di:12 do:34 (*)	8	853305	mounting axle body	5131 65	di:12 do:33
4	807602	silentblock for TCA	3523 51	di:16.8 (*)	9	53278 KIT	repair kit rear axle	5131 64 S1	
5	7687	ball joint lower	3640 36	c:16 do:36.8	10	53279 KIT	repair kit rear axle	5131 64 S1	

Copyright 2021

CITROEN
SAXO

SIDEM Experts know why

SAXO (VTS-VTR) 06/1996 - 10/2003

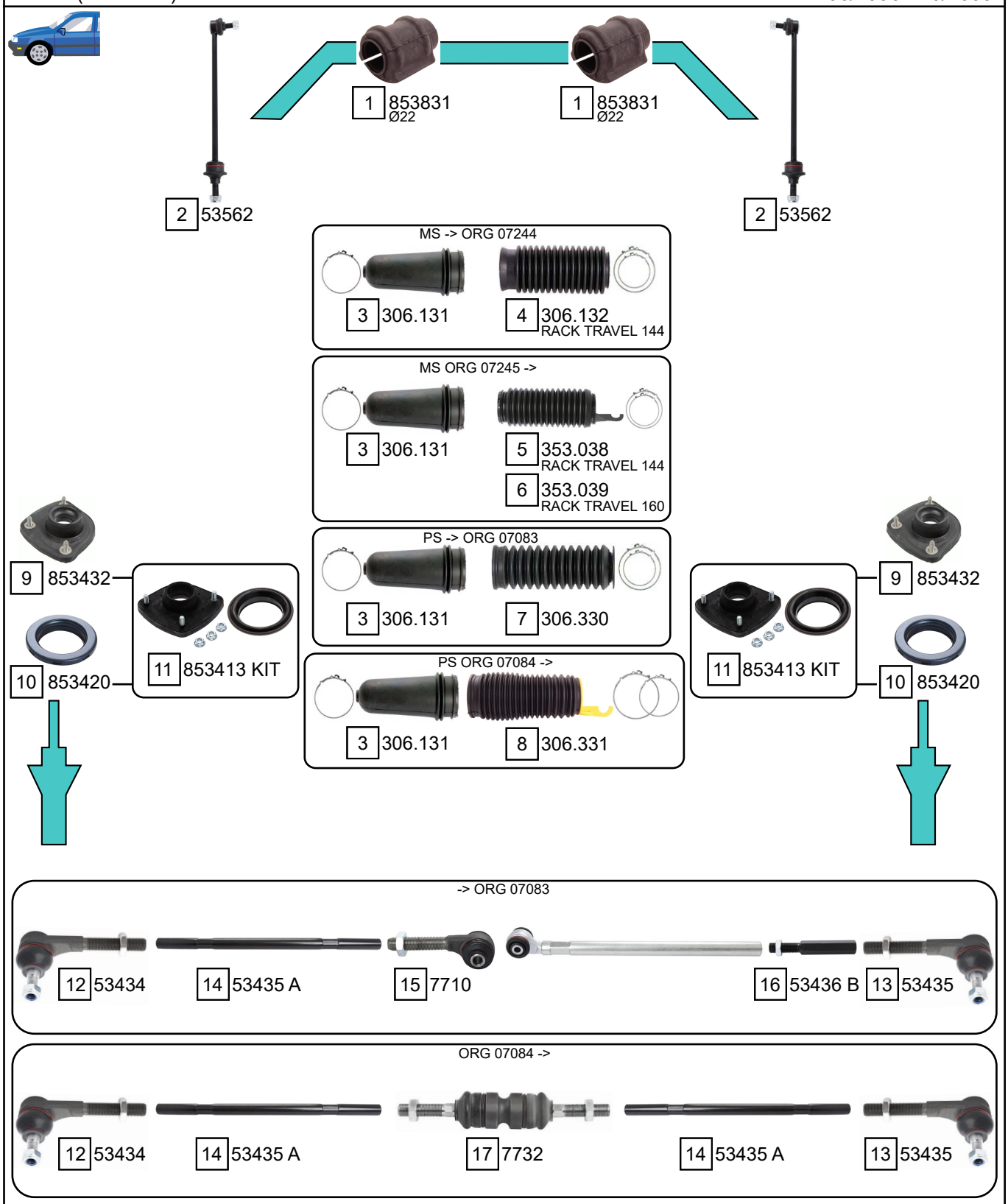

Ref.	Sidem Ref.	Description	OE-number	Measures	Ref.	Sidem Ref.	Description	OE-number	Measures
1	853831	stabiliser mounting	5094 71	di:21.6	10	853420	bearing	5035 27	di:65 do:99.5 L:20
2	53562	stabiliser link	5087 40	L:323	11	853413 KIT	strut mount kit	5031 53	di:31.5 do:64 L:36.5
3	306.131	steering rack gaiter	4066 32	D:40 d:12 L:106	12	53434	tie rod end	3817 41	c:12.1 th:MM14x1.5R
4	306.132	steering rack gaiter	4066 34	D:38 d:20 L:134	13	53435	tie rod end	3817 42	c:12.1 th:MM14x1.5R
5	353.038	steering rack gaiter	4066 48	D:39 d:38 L:138	14	53435 A	connecting piece	3812 A0	L:381
6	353.039	steering rack gaiter	4066 49	D:39 d:38 L:138	15	7710	axial joint	3817 33	L:90
7	306.330	steering rack gaiter	4066 36	D:42 L:132	16	53436 B	connecting piece	3817 34	L:133
8	306.331	steering rack gaiter	4066 50	D:45 d:22 L:120	17	7732	axial joint	3817 47	th:MM14X1.5L L:214
9	853432	strut mount	5038 15	di:31.5 do:64 L:36.5					

Copyright 2021

SAXO (VTS - VTR) 06/1996 - 10/2003

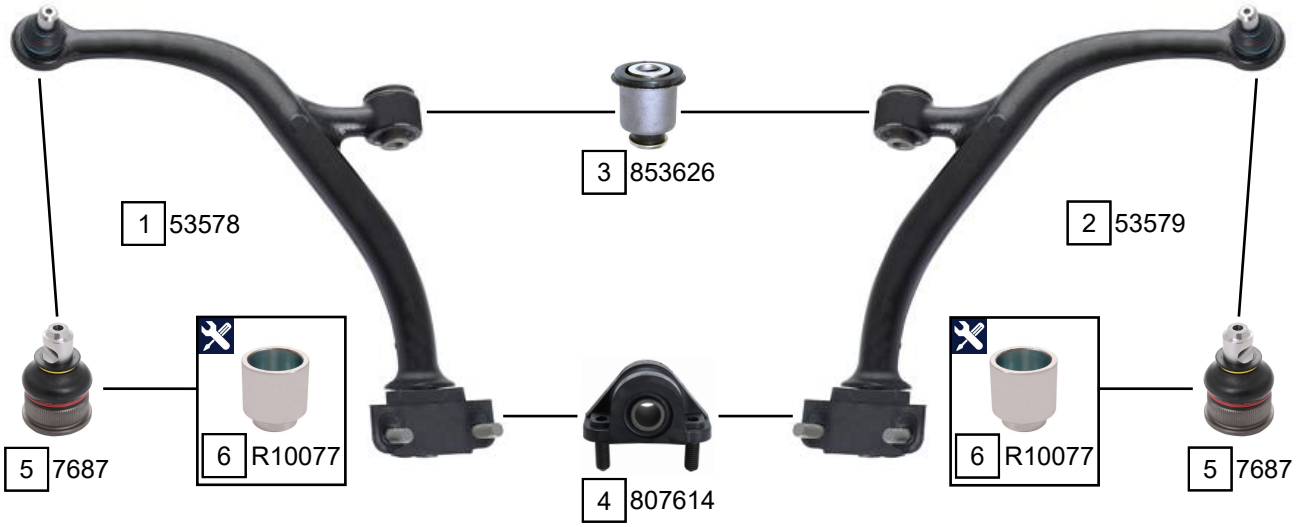

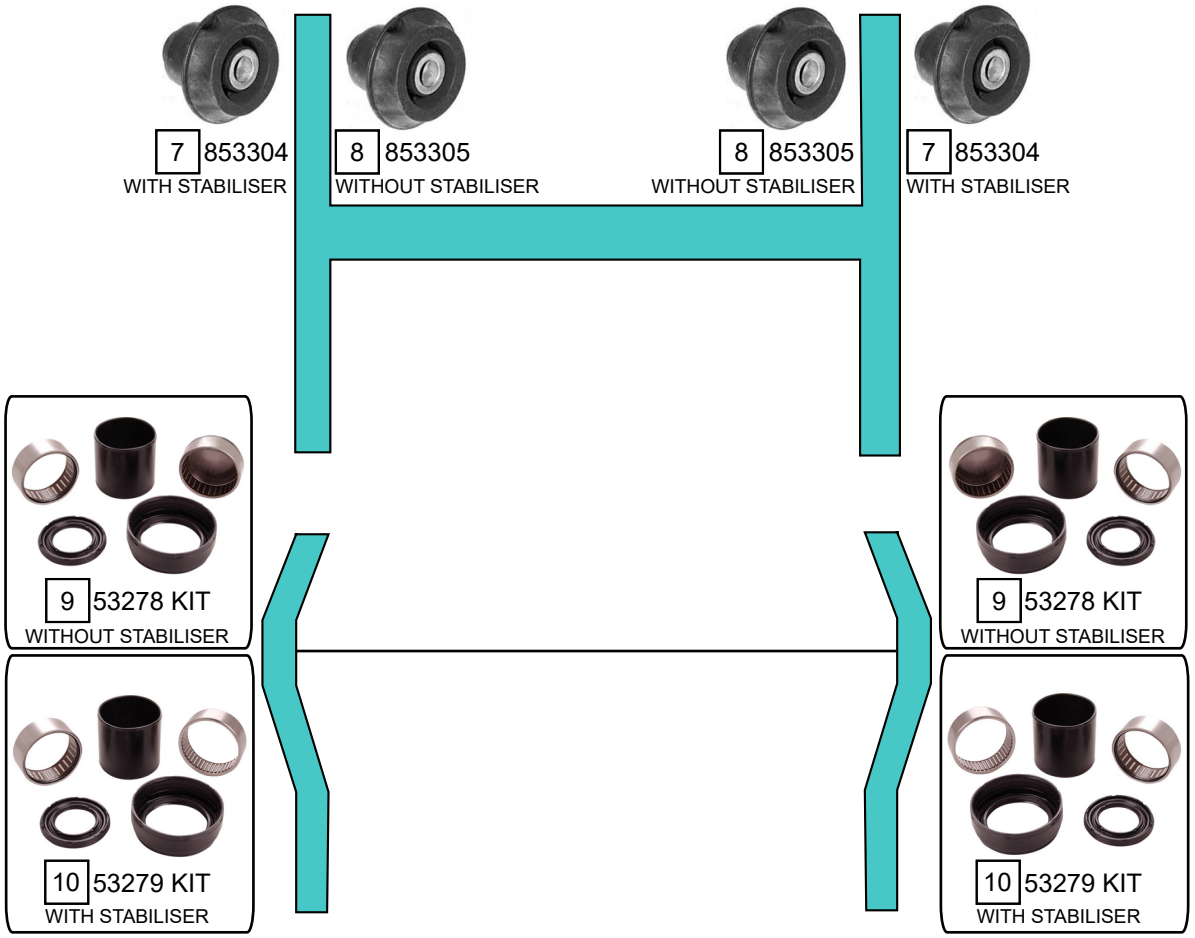

Ref.	Sidem Ref.	Description	OE-number	Measures	Ref.	Sidem Ref.	Description	OE-number	Measures
1	53578	TCA left wbj	3520 92	c:16	6	R10077	mounting tool ring ø42 ø34	SEE PAGE III	di:34 do:42
2	53579	TCA right wbj	3520 93	c:16	7	853304	mounting axle body	5131 63	di:12 do:33.4
3	853626	silentblock for TCA	3523 52	di:12.2 do:34.2 (*)	8	853305	mounting axle body	5131 65	di:12 do:33
4	807614	silentblock for TCA	Part of	di:16.8 do:16.8 (*)	9	53278 KIT	repair kit rear axle	5131 64 S1	
5	7687	ball joint lower	3640 36	c:16 do:36.8	10	53279 KIT	repair kit rear axle	5131 64 S1	

Copyright 2021

CITROEN
SPACETOURER

SIDEM
Experts know why

SPACETOURER 04/2016 ->

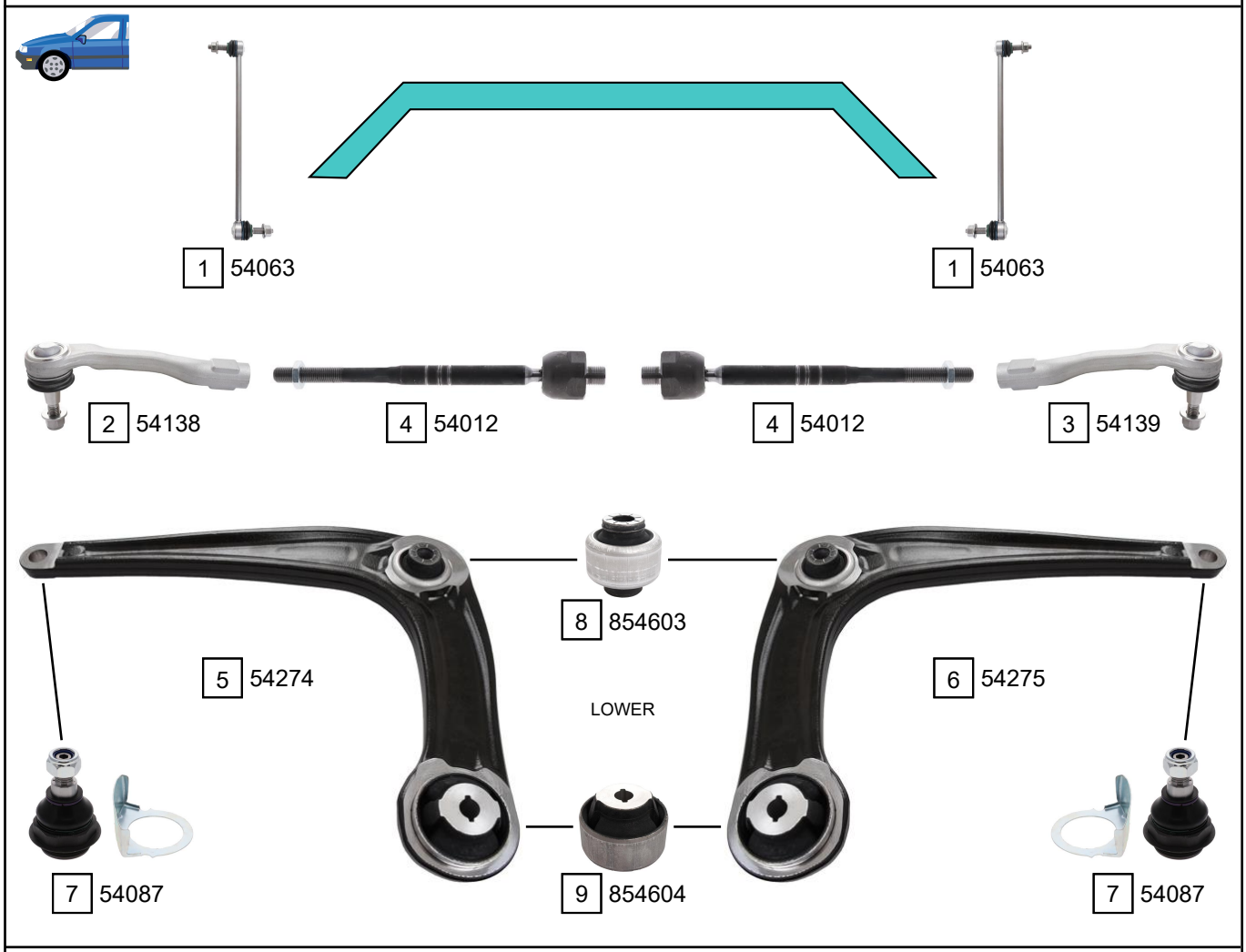

Ref.	Sidem Ref.	Description	OE-number	Measures	Ref.	Sidem Ref.	Description	OE-number	Measures
1	54063	stabiliser link	98 090 901 80	L:355	8	854603	silentblock for TCA	98 090 826 80	di:16.1 do:58 (*)
2	54138	tie rod end left	98 203 400 80	c:14.2 th:FM14X1.5R	9	854604	silentblock for TCA	98 165 579 80	di:14.3 do:70.5 (*)
3	54139	tie rod end right	98 203 401 80	c:14.2 th:FM14X1.5R	10	854300	mounting axle body	98 148 540 80	di:16.4 do:73
4	54012	axial joint	Part of	th:MM16X1.5R L:265	11	854301	mounting axle body	98 148 541 80	di:14.4 do:73.5
5	54274	TCA left wobj	98 168 636 80	c:18.2	12	854302	mounting axle body	98 148 542 80	di:16.4 do:73
6	54275	TCA right wobj	98 168 635 80	c:18.2	13	854303	mounting axle body	98 148 543 80	di:14.4 do:73.5
7	54087	ball joint	98 345 990 80 S1	c:18.6	14	54064	stabiliser link	98 056 213 80	L:80

Copyright 2021

VISA 09/1978 - 03/1991

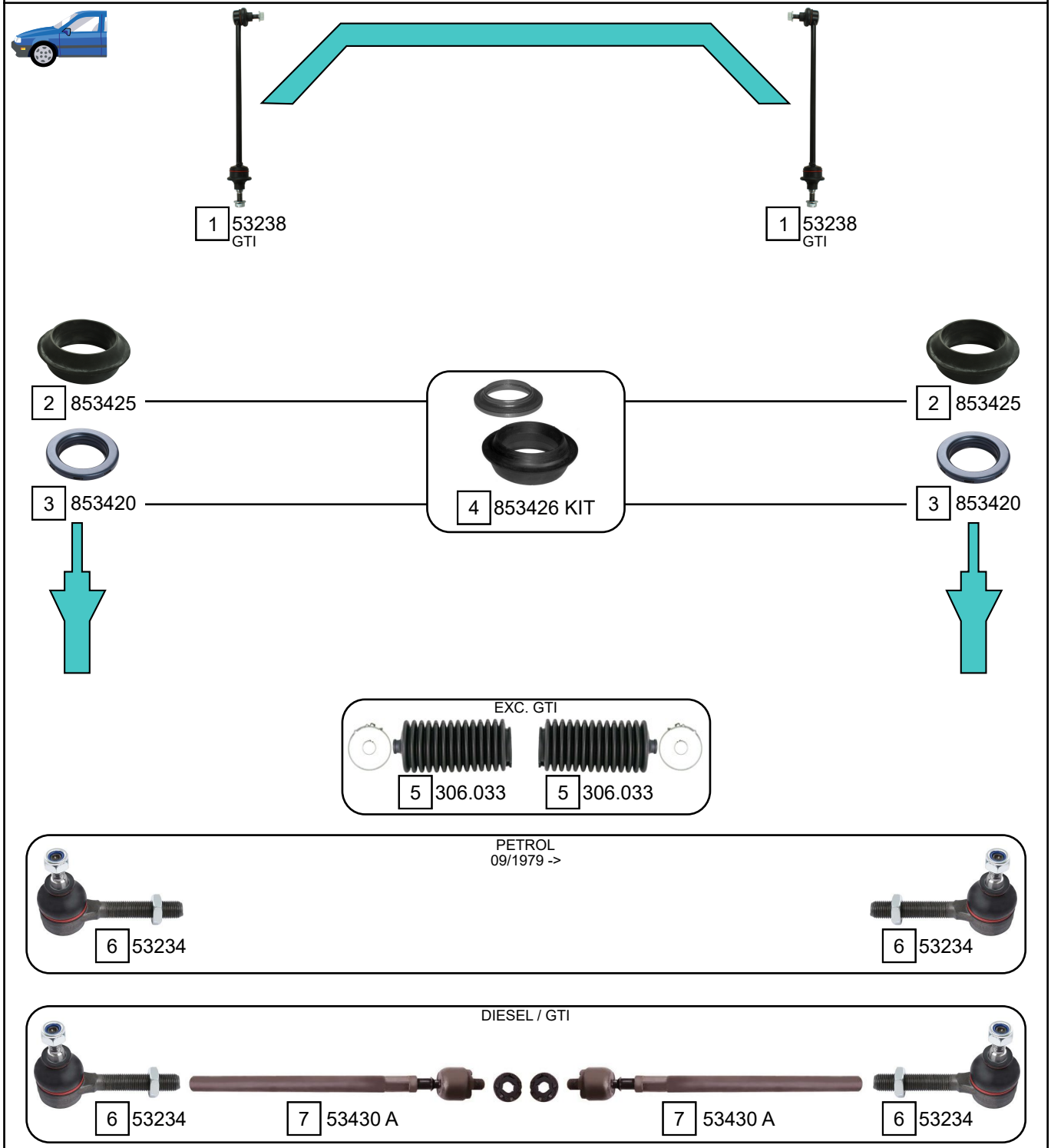

Ref.	Sidem Ref.	Description	OE-number	Measures	Ref.	Sidem Ref.	Description	OE-number	Measures
1	53238	stabiliser link	5087 32	L:332	5	306.033	steering rack gaiter	4066 20	D:40 d:10 L:175
2	853425	strut mount	5037 33	di:61.5 do:99.5 L:35.3	6	53234	tie rod end	3817 50	c:12 th:MM14X1.5R
3	853420	bearing	5035 27	di:65 do:99.5 L:20	7	53430 A	axial joint	96 136 394	th:MM12X1R L:317
4	853426 KIT	strut mount kit	5037 33 S1	di:61.5 do:99.5 L:35.3					

Copyright 2021

CITROEN
VISA

VISA 09/1978 - 03/1991

PETROL

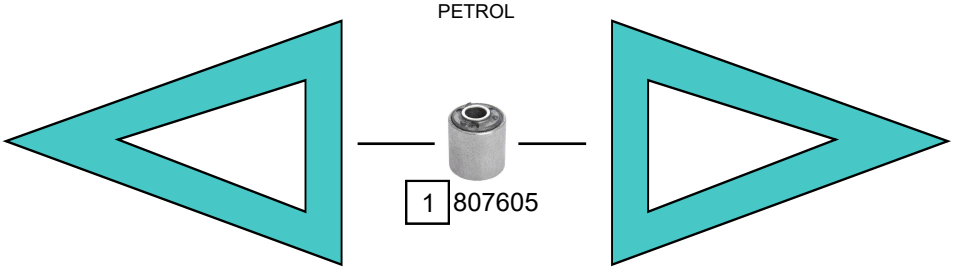

DIESEL

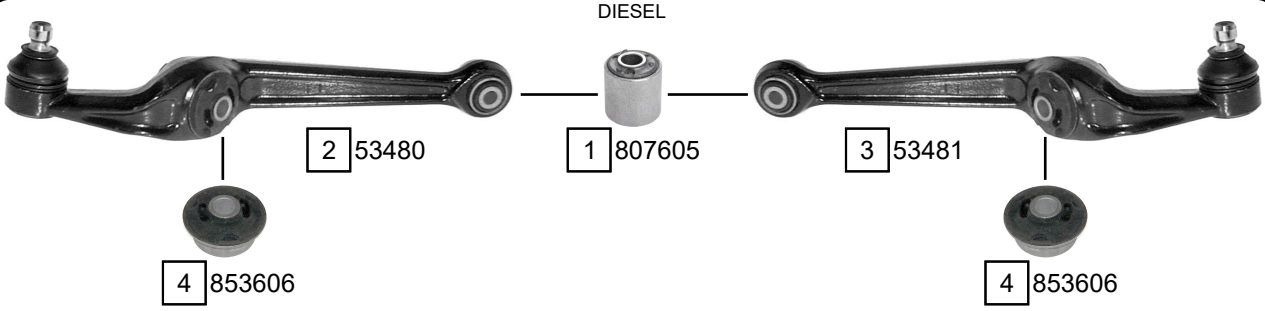

GTI

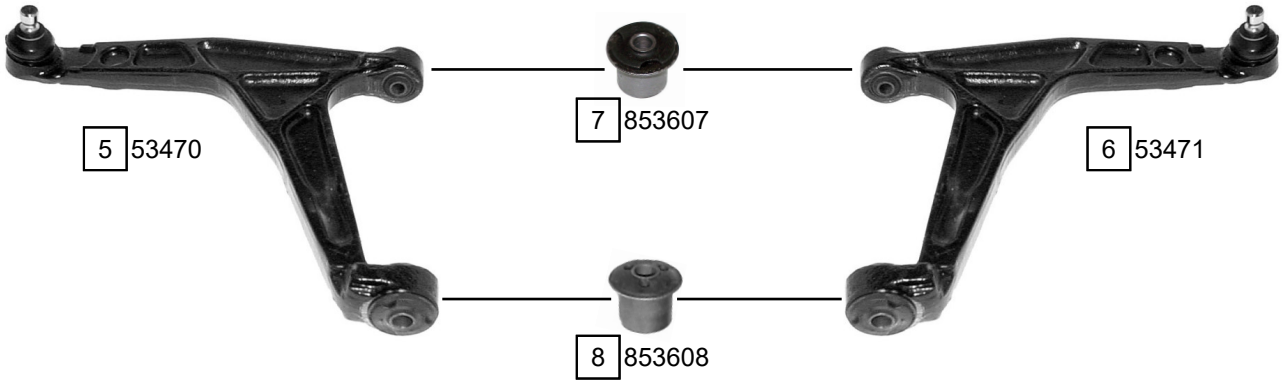

Ref.	Sidem Ref.	Description	OE-number	Measures	Ref.	Sidem Ref.	Description	OE-number	Measures
1	807605	silentblock for TCA	3523 20	di:10 do:28 (*)	5	53470	TCA left wbj	3520 54	c:16
2	53480	TCA left wbj	3520 51	c:16	6	53471	TCA right wbj	3521 37	c:16
3	53481	TCA right wbj	3521 34	c:16	7	853607	silentblock for TCA	3523 31	di:10 do:28 (*)
4	853606	silentblock for TCA	3523 49	di:12.0 do:36.5 (*)	8	853608	silentblock for TCA	3523 23	di:12 do:31 (*)

Copyright 2021

XANTIA 03/1993 - 04/2003

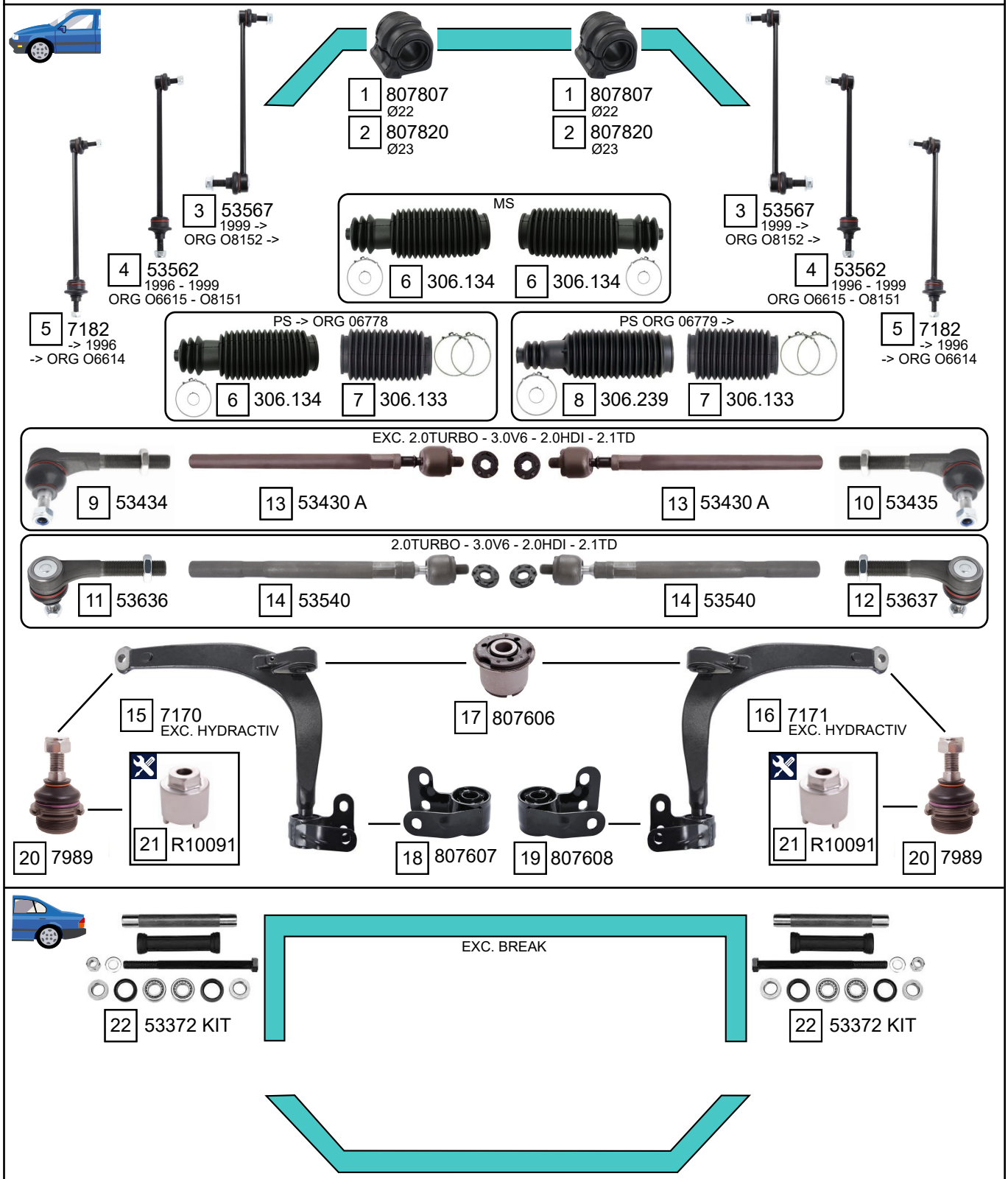

Ref.	Sidem Ref.	description	OE-number	measures	Ref.	Sidem Ref.	description	OE-number	measures
1	807807	stabiliser mounting	96 089 104	di:22	12	53637	tie rod end right	3817 44	c:11.8 th:MM16x1.5R
2	807820	stabiliser mounting	96 089 106	di:22.9	13	53430 A	axial joint	96 136 394	th:MM12X1R L:317
3	53567	stabiliser link	5087 60	L:319	14	53540	axial joint	3812 A9	th:MM12X1R L:313
4	53562	stabiliser link	5087 40	L:323	15	7170	TCA left wobj	3520 C1	c:15.4
5	7182	stabiliser link	96 145 457	L:322	16	7171	TCA right wobj	3521 81	c:15.4
6	306.134	steering rack gaiter	4066 29	D:44 d:11 L:200	17	807606	silentblock for TCA	Part of	di:12.1 do:36.9 (*)
7	306.133	steering rack gaiter	4066 30	D:44 d:44 L:120	18	807607	silentblock for TCA	Part of	di:18 do:18 (*)
8	306.239	steering rack gaiter	4066 42	D:45 d:14 L:206	19	807608	silentblock for TCA	Part of	di:18 do:18 (*)
9	53434	tie rod end	3817 41	c:12.1 th:MM14x1.5R	20	7989	ball joint	3640 71	c:15.9
10	53435	tie rod end	3817 42	c:12.1 th:MM14x1.5R	21	R10091	mounting tool	SEE PAGE II	di:43.3
11	53636	tie rod end left	3817 43	c:11.8 th:MM16x1.5R	22	53372 KIT	repair kit rear axle	5132 44 S1	

Copyright 2021

CITROEN
XM

XM (Y3, Y4) 05/1989 - 10/2000
XM BREAK 11/1991 - 10/2000

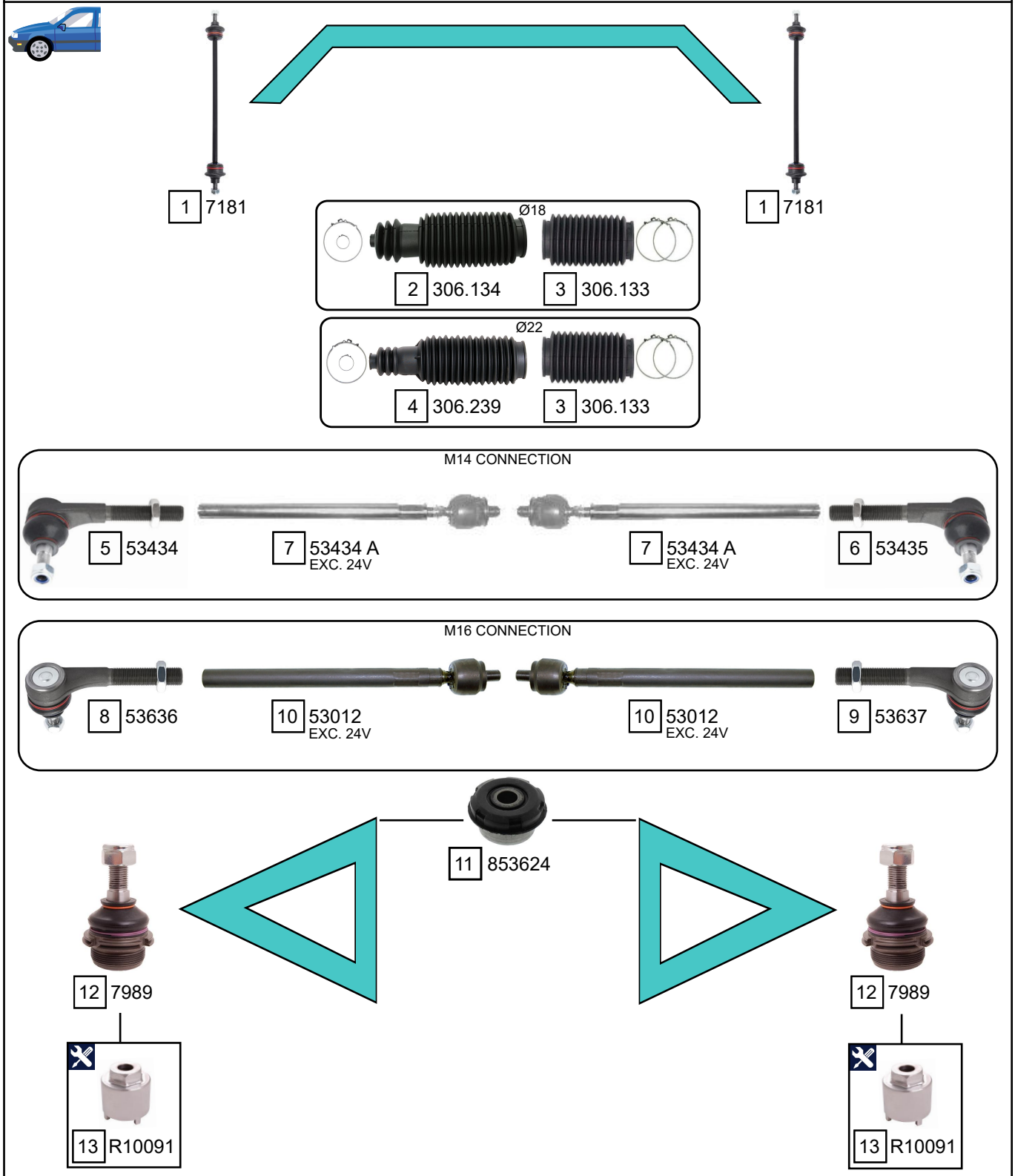

Ref.	Sidem Ref.	Description	OE-number	Measures	Ref.	Sidem Ref.	Description	OE-number	Measures
1	7181	stabiliser link	96 080 894	L:348	8	53636	tie rod end left	3817 43	c:11.8 th:MM16x1.5R
2	306.134	steering rack gaiter	4066 29	D:44 d:11 L:200	9	53637	tie rod end right	3817 44	c:11.8 th:MM16x1.5R
3	306.133	steering rack gaiter	4066 30	D:44 d:44 L:120	10	53012	axial joint	3812 A6	th:MM12X1R L:293
4	306.239	steering rack gaiter	4066 42	D:45 d:14 L:206	11	853624	silentblock for TCA	3523 43	di:14 do:40.2 (*)
5	53434	tie rod end	3817 41	c:12.1 th:MM14x1.5R	12	7989	ball joint	3640 71	c:15.9
6	53435	tie rod end	3817 42	c:12.1 th:MM14x1.5R	13	R10091	mounting tool	SEE PAGE II	di:43.3
7	53434 A	axial joint	3812 99	th:MM12X1R L:300					

Copyright 2021

XSARA 04/1997 - 08/2005

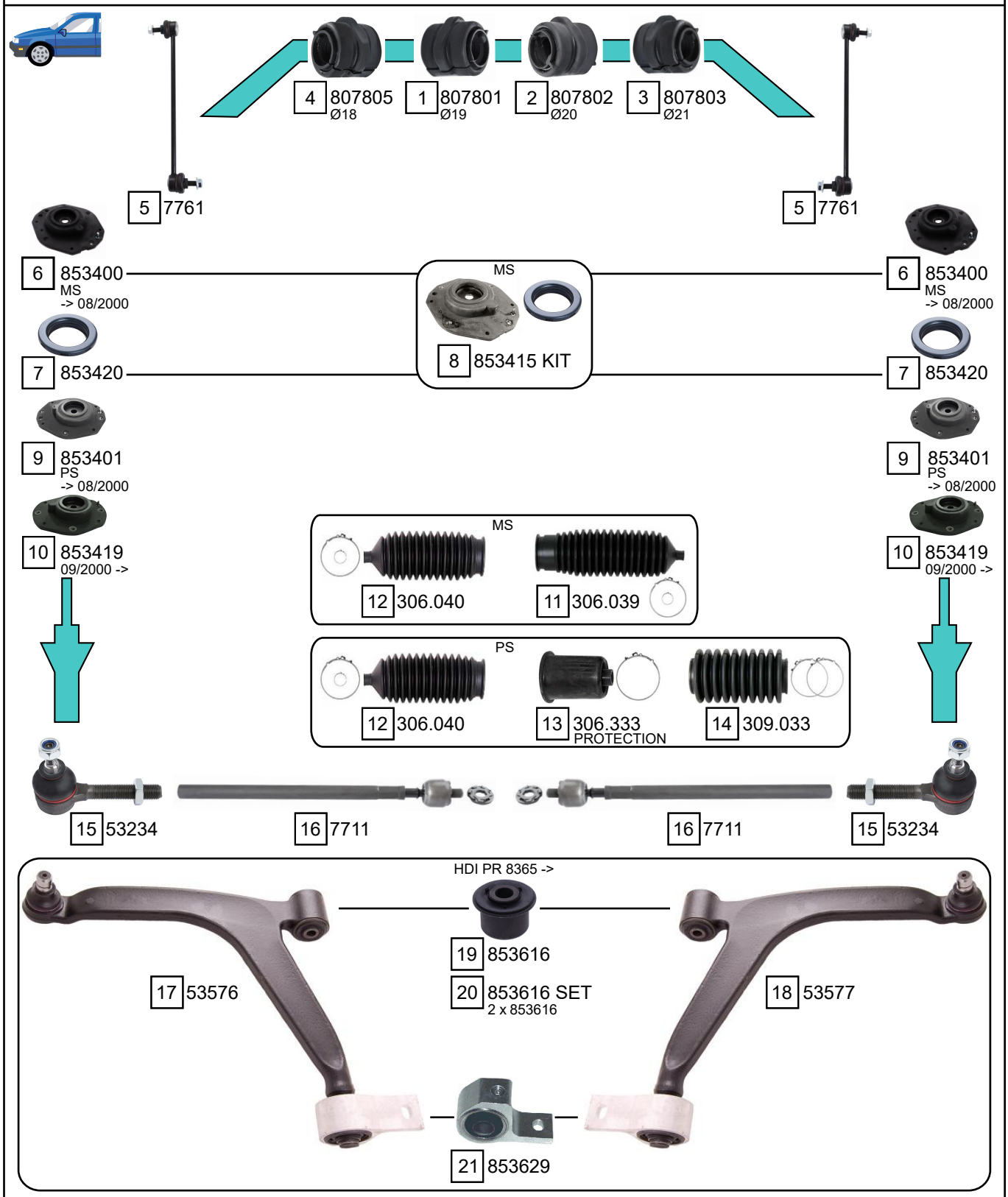

Ref.	Sidem Ref.	description	OE-number	measures	Ref.	Sidem Ref.	description	OE-number	measures
1	807801	stabiliser mounting	5094 66	di:19	12	306.040	steering rack gaiter	4066 43	D:42 d:11 L:155
2	807802	stabiliser mounting	5094 79	di:20	13	306.333	steering rack gaiter	4066 16	D:39 d:11 L:66
3	807803	stabiliser mounting	5094 65	di:21	14	309.033	steering rack gaiter	4066 22	D:40 d:40 L:115
4	807805	stabiliser mounting	96 158 745	di:17	15	53234	tie rod end	3817 50	c:12 th:MM14X1.5R
5	7761	stabiliser link	5087 46	L:300	16	7711	axial joint	3812 C0	th:MM12X1R L:342
6	853400	strut mount	5038 76	di:14.3 do:108 L:50	17	53576	TCA left wbj	3520 V3	c:18
7	853420	bearing	5035 27	di:65 do:99.5 L:20	18	53577	TCA right wbj	3521 R4	c:18
8	853415 KIT	strut mount kit	5031 72	di:14.2 do:108.6 L:48.5	19	853616	silentblock for TCA	Part of	di:12.2 do:33 (*)
9	853401	strut mount	5038 78	di:14.2 do:87.5 L:49	20	853616 SET	silentblock kit	Part of	
10	853419	strut mount	5038 62	di:14.2 do:108 L:48.5	21	853629	silentblock for TCA	3523 83	di:19 do:19.2 (*)
11	306.039	steering rack gaiter	4066 44	D:42 d:11 L:185					

Copyright 2021

CITROEN
XSARA

XSARA 04/1997 - 08/2005

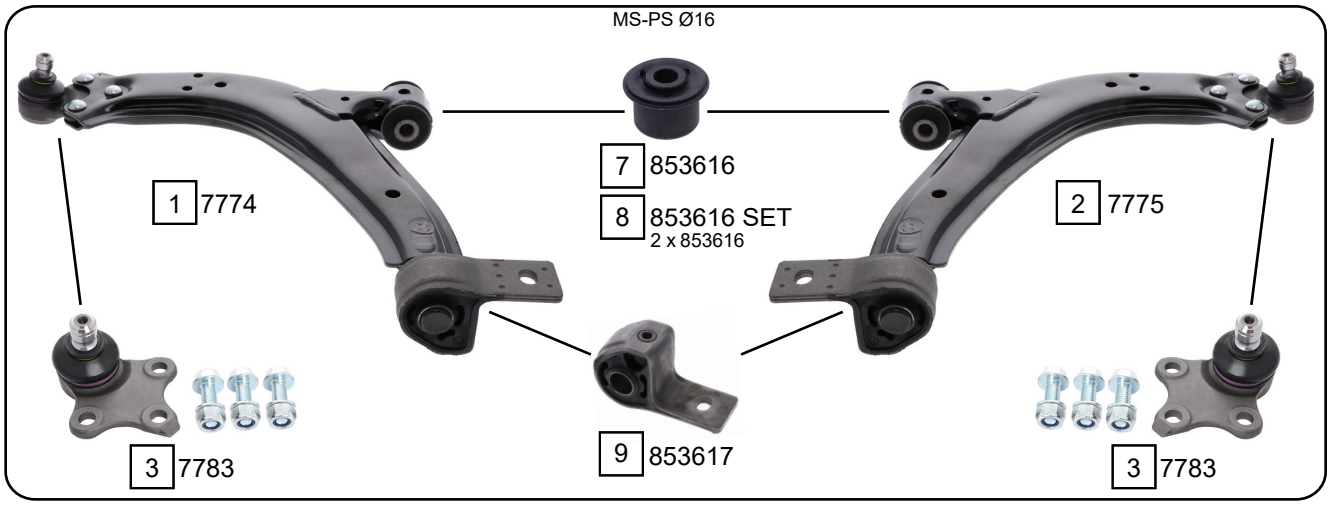

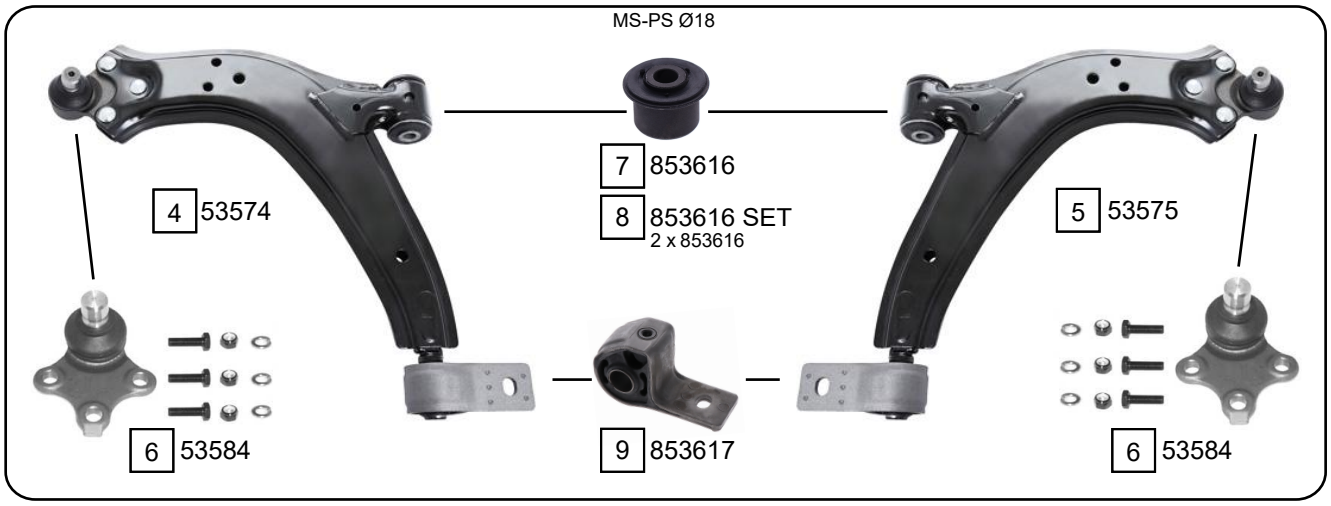

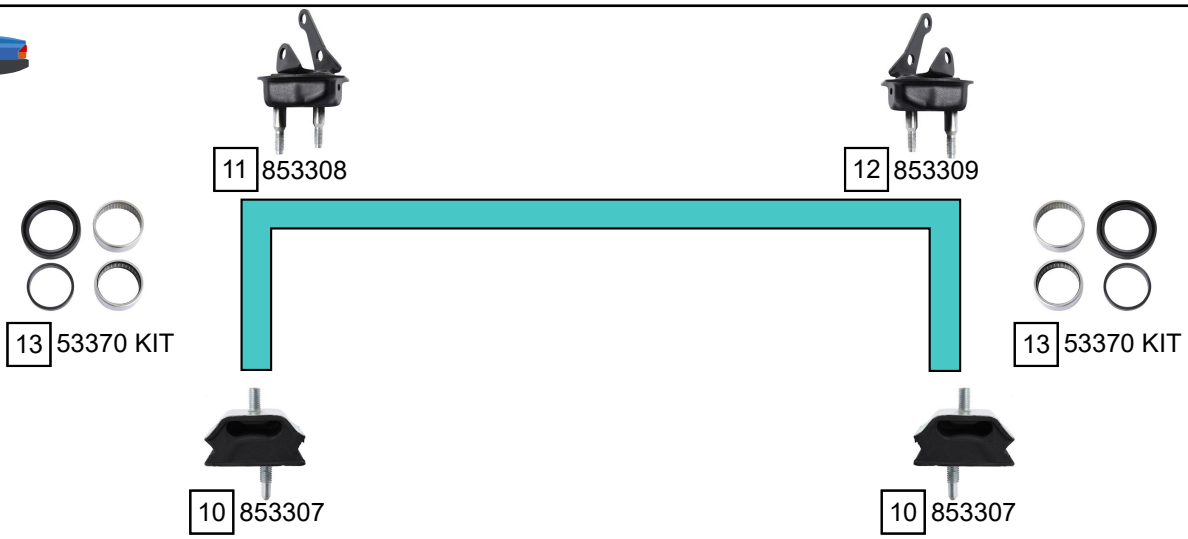

Ref.	Sidem Ref.	Description	OE-number	Measures	Ref.	Sidem Ref.	Description	OE-number	Measures
1	7774	TCA left wbj	3520 H6 S1	c:16	8	853616 SET	silentblock kit	Part of	
2	7775	TCA right wbj	3521 E6 S1	c:16	9	853617	silentblock for TCA	3523 75	di:18.9 do:18.9 (*)
3	7783	ball joint	3640 43	c:16	10	853307	mounting axle body	5131 71	
4	53574	TCA left wbj	3520 A1	c:18	11	853308	mounting axle body	5131 69	
5	53575	TCA right wbj	3521 71	c:18	12	853309	mounting axle body	5131 70	
6	53584	ball joint	3640 51	c:18	13	53370 KIT	repair kit rear axle	5131 45 S1	
7	853616	silentblock for TCA	Part of	di:12.2 do:33 (*)					

Copyright 2021

CITROEN
XSARA PICASSO

XSARA PICASSO 12/1999 - 06/2012

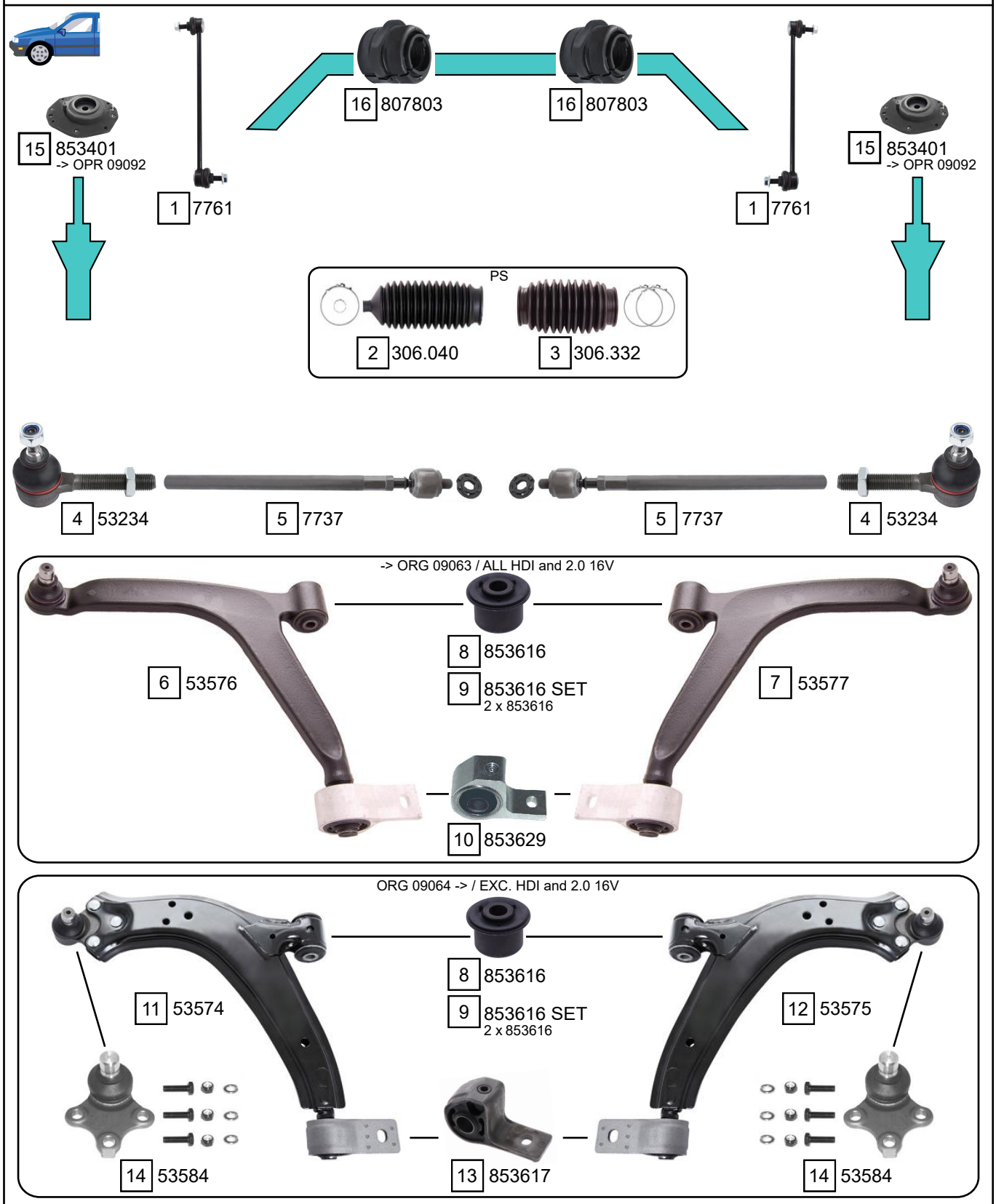

Ref.	Sidem Ref.	Description	OE-number	Measures	Ref.	Sidem Ref.	Description	OE-number	Measures
1	7761	stabiliser link	5087 46	L:300	9	853616 SET	silentblock kit	Part of	
2	306.040	steering rack gaiter	4066 43	D:42 d:11 L:155	10	853629	silentblock for TCA	3523 83	di:19 do:19.2 (*)
3	306.332	steering rack gaiter	4066 62	D:42 d:42 L:115	11	53574	TCA left wbj	3520 A1	c:18
4	53234	tie rod end	3817 50	c:12 th:MM14X1.5R	12	53575	TCA right wbj	3521 71	c:18
5	7737	axial joint	3812 C6	th:MM12X1R L:342	13	853617	silentblock for TCA	3523 75	di:18.9 do:18.9 (*)
6	53576	TCA left wbj	3520 V3	c:18	14	53584	ball joint	3640 51	c:18
7	53577	TCA right wbj	3521 R4	c:18	15	853401	strut mount	5038 78	di:14.2 do:87.5 L:49
8	853616	silentblock for TCA	Part of	di:12.2 do:33 (*)	16	807803	stabiliser mounting	5094 65	di:21

Copyright 2021

CITROEN
XSARA PICASSO

XSARA PICASSO 12/1999 - 06/2012

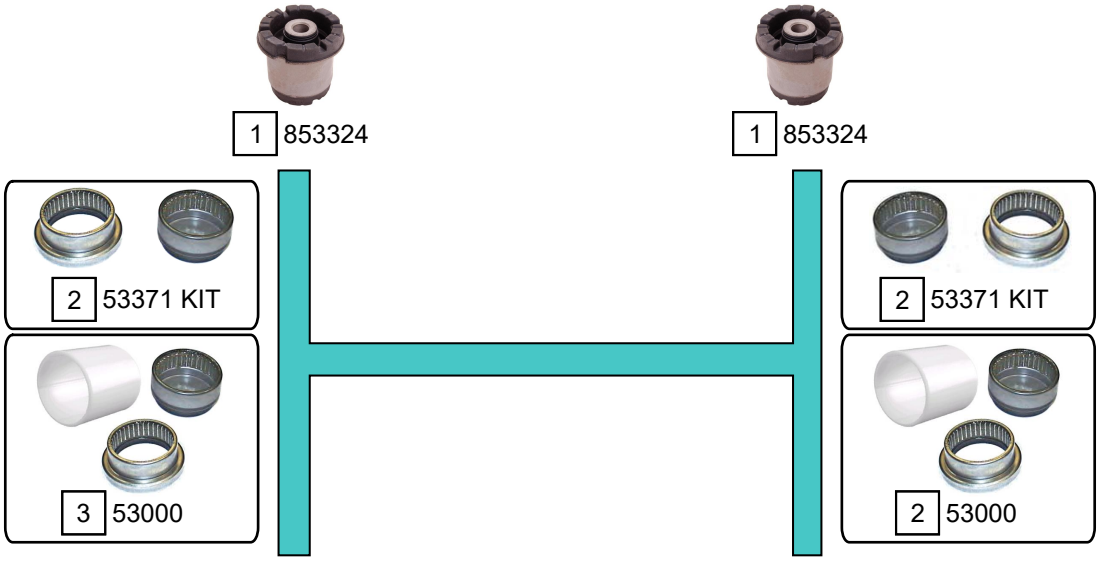

Ref.	Sidem Ref.	Description	OE-number	Measures	Ref.	Sidem Ref.	Description	OE-number	Measures
1	853324	mounting axle body	5131 97	di:12.1 do:53.3	3	53000	repair kit rear axle	5131 48 S2	
2	53371 KIT	repair kit rear axle	5131 48 S1						

Copyright 2021

ZX
ZX BREAK

03/1991 - 06/1997
10/1993 - 10/1997

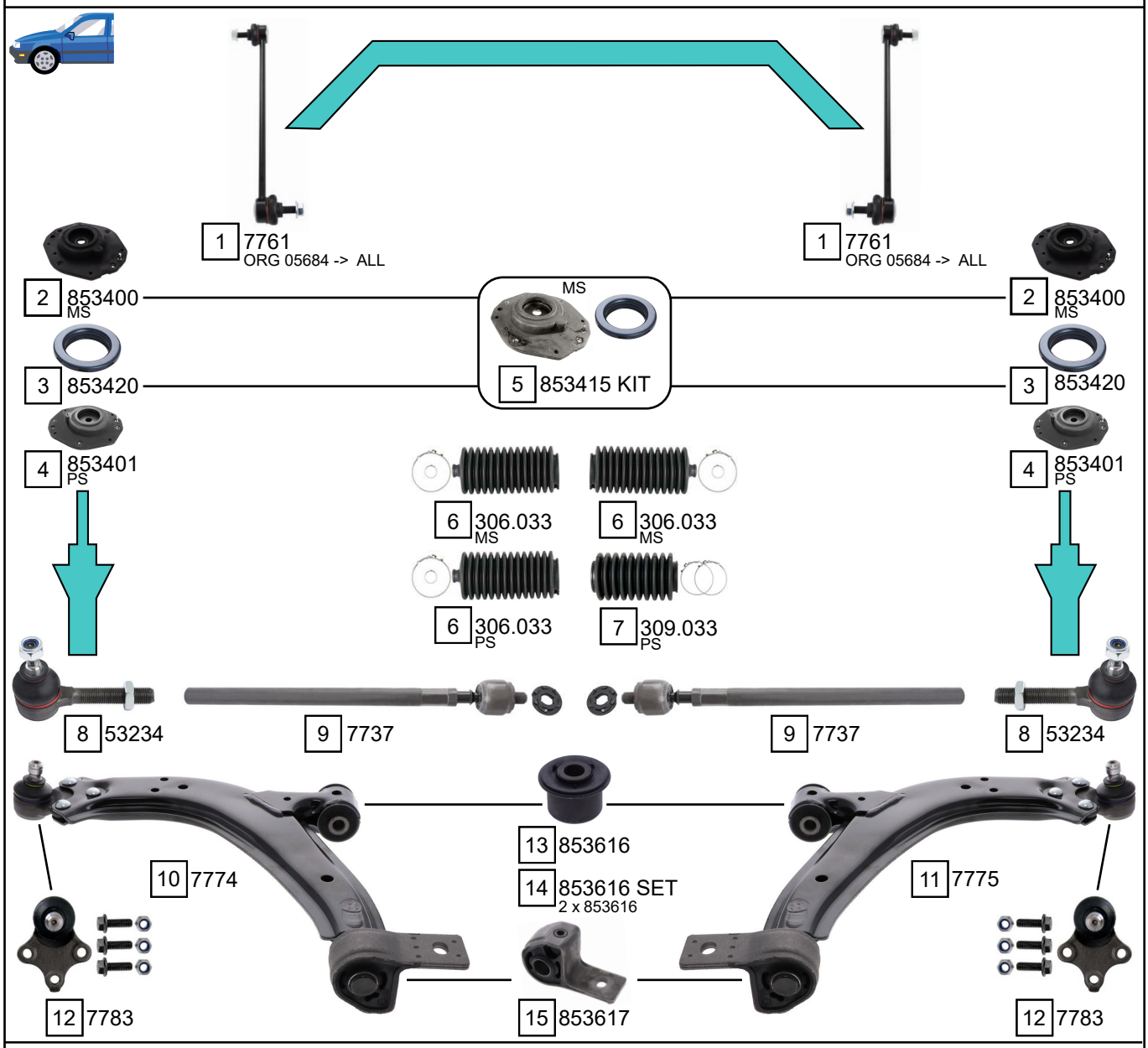

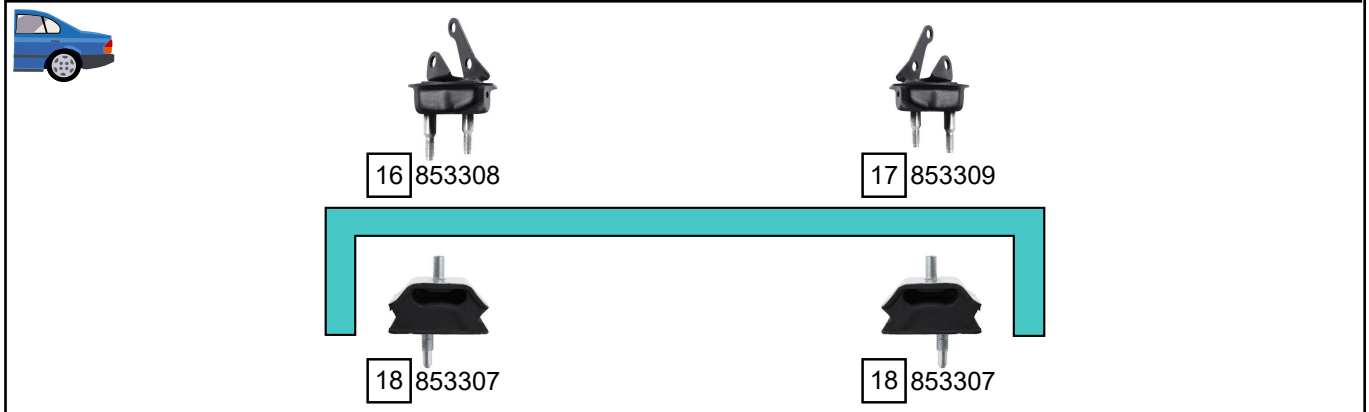

Ref.	Sidem Ref.	Description	OE-number	Measures	Ref.	Sidem Ref.	Description	OE-number	Measures
1	7761	stabiliser link	5087 46	L:300	10	7774	TCA left wbj	3520 H6 S1	c:16
2	853400	strut mount	5038 76	di:14.3 do:108 L:50	11	7775	TCA right wbj	3521 E6 S1	c:16
3	853420	bearing	5035 27	di:65 do:99.5 L:20	12	7783	ball joint	3640 43	c:16
4	853401	strut mount	5038 78	di:14.2 do:87.5 L:49	13	853616	silentblock for TCA	Part of	di:12.2 do:33 (*)
5	853415 KIT	strut mount kit	5031 72	di:14.2 do:108.6 L:48.5	14	853616 SET	silentblock kit	Part of	
6	306.033	steering rack gaiter	4066 20	D:40 d:10 L:175	15	853617	silentblock for TCA	3523 75	di:18.9 do:18.9 (*)
7	309.033	steering rack gaiter	4066 22	D:40 d:40 L:115	16	853308	mounting axle body	5131 69	
8	53234	tie rod end	3817 50	c:12 th:MM14X1.5R	17	853309	mounting axle body	5131 70	
9	7737	axial joint	3812 C6	th:MM12X1R L:342	18	853307	mounting axle body	5131 71	

Copyright 2021