PORSCHE

901 - 911 - 912 - 914

901-911-912-914 | 01/1963 - 02/1989

1 63930

1 63930

Ref.	Sidem Ref.	Description	OE-number	Measures	Ref.	Sidem Ref.	Description	OE-number	Measures
1	63930	tie rod end	911 347 322 04	c:12.6 th:MM14x1.5R					

Copyright 2021

911 (996) 09/1997 - 08/2005
911 CONVERTIBLE (996) 12/2001 - 08/2005
911 TARGA (996) 12/2001 - 08/2005

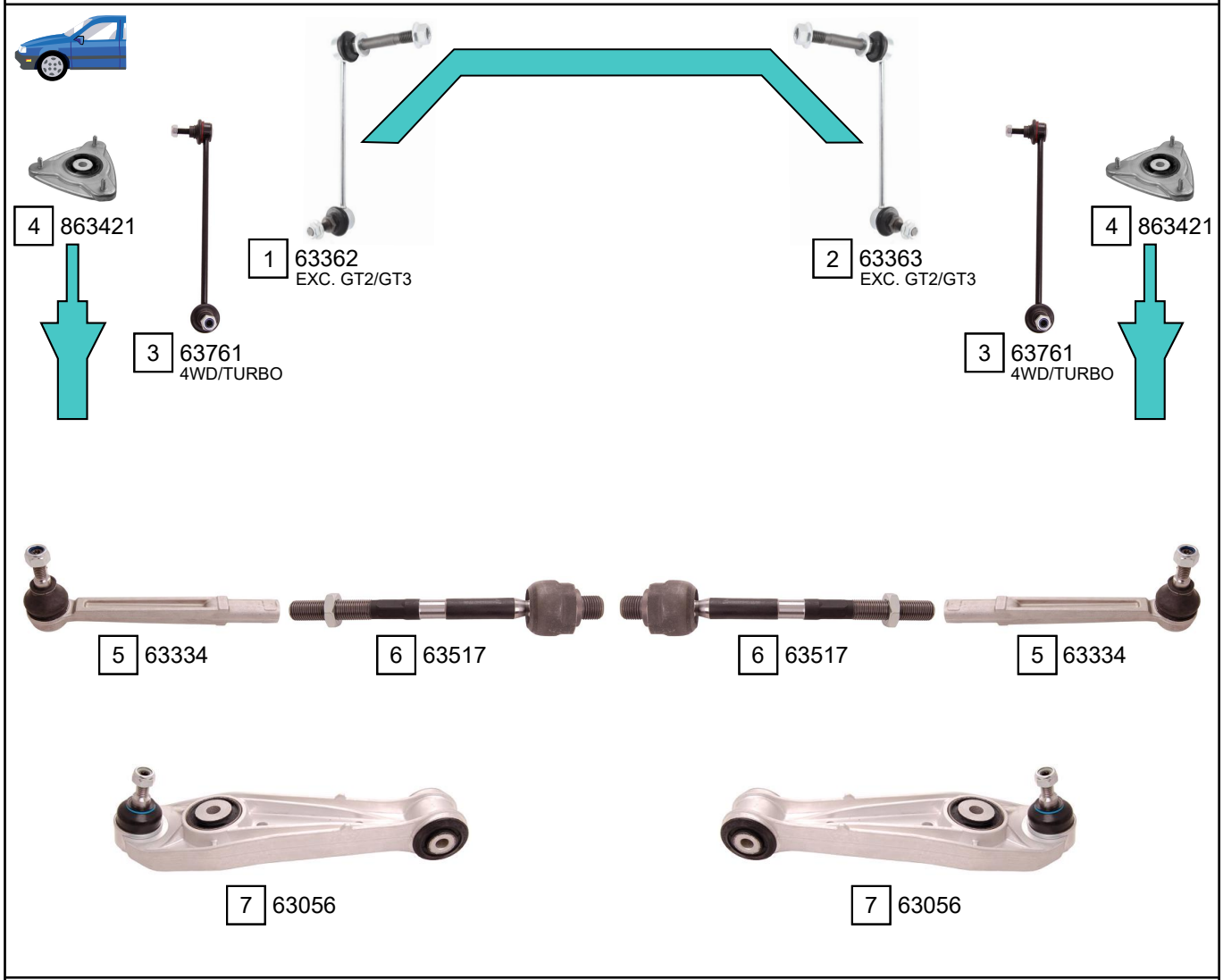

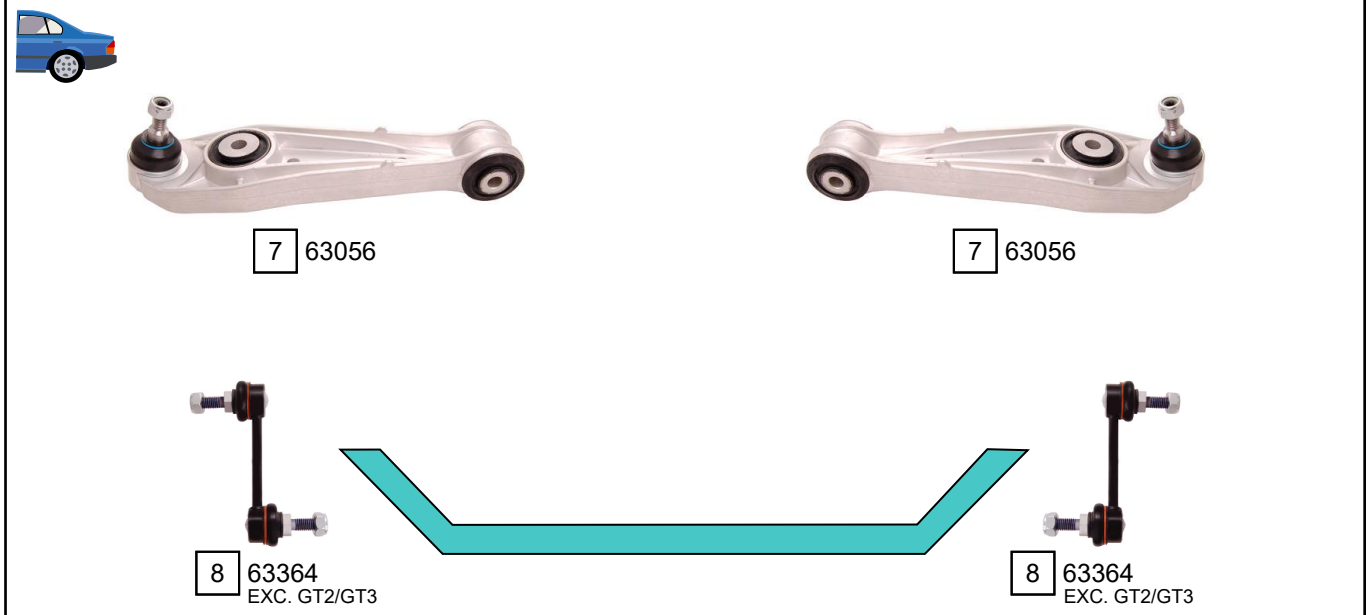

Ref.	Sidem Ref.	Description	OE-number	Measures	Ref.	Sidem Ref.	Description	OE-number	Measures
1	63362	stabiliser link left	996 343 069 04	L:200	5	63334	tie rod end	991 347 131 00	c:15 th:FM14X1.5R
2	63363	stabiliser link right	996 343 070 04	L:200	6	63517	axial joint	996 347 322 03	th:MM16X1.5R L:197
3	63761	stabiliser link	996 343 073 05	L:284	7	63056	TCA	996 341 053 17	c:17
4	863421	strut mount	997 343 018 01	di:14.2 do:59 L:43.2	8	63364	stabiliser link	996 333 069 04	L:99

Copyright 2021

PORSCHE
911

911 (997) 07/2004 - 06/2012
911 CONVERTIBLE (997) 04/2005 - 12/2012
911 TARGA (997) 07/2006 - 12/2012

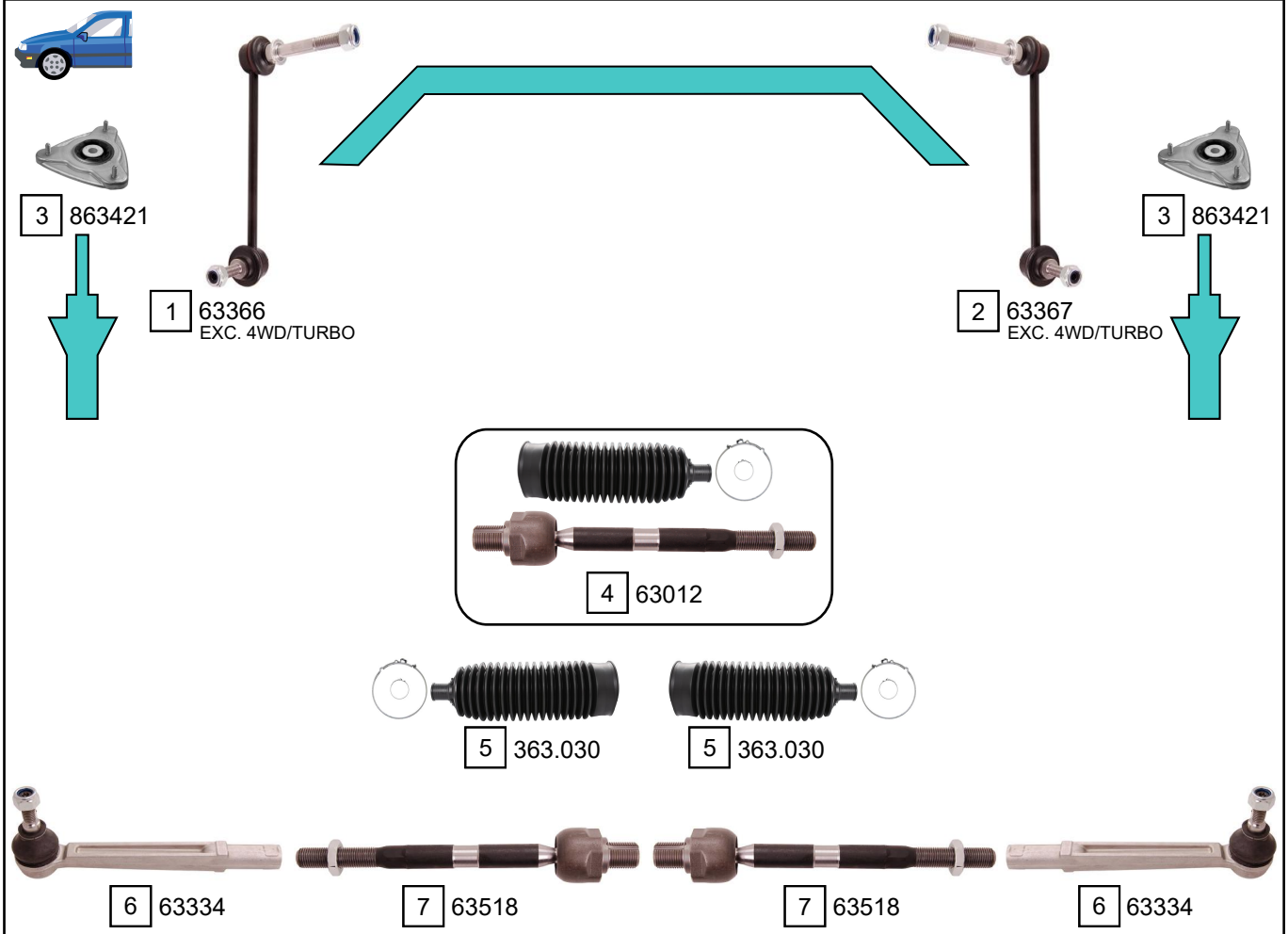

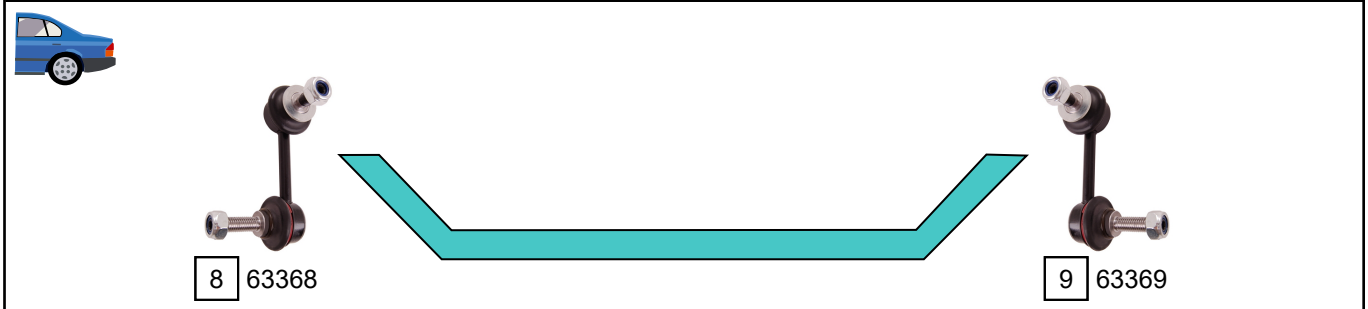

Ref.	Sidem Ref.	Description	OE-number	Measures	Ref.	Sidem Ref.	Description	OE-number	Measures
1	63366	stabiliser link left	997 343 069 04	L:200	6	63334	tie rod end	991 347 131 00	c:15 th:FM14X1.5R
2	63367	stabiliser link right	997 343 070 04	L:200	7	63518	axial joint	997 347 322 01	th:MM18X1.5R L:213
3	863421	strut mount	997 343 018 01	di:14.2 do:59 L:43.2	8	63368	stabiliser link left	997 333 069 06	L:85
4	63012	axial joint kit	997 347 322 01 S1	D:51 th:MM14X1.5R	9	63369	stabiliser link right	997 333 070 06	L:85
5	363.030	steering rack gaiter	997 347 191 00	D:51 d:14.5 L:163					

Copyright 2021

911 (991) 12/2011 ->
911 CONVERTIBLE (991) 03/2012 ->
911 TARGA (991) 05/2014 ->

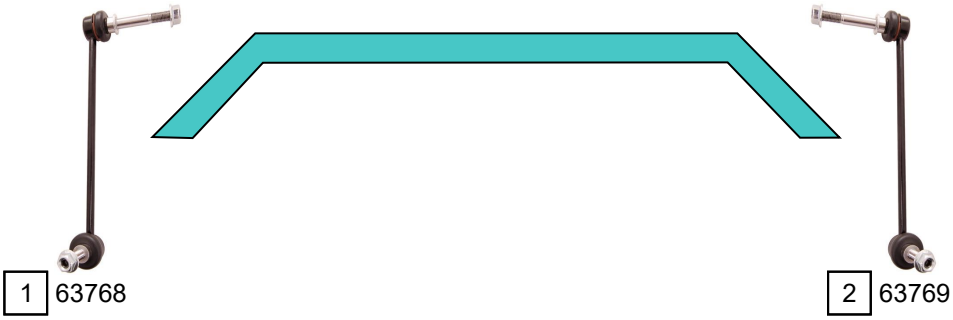

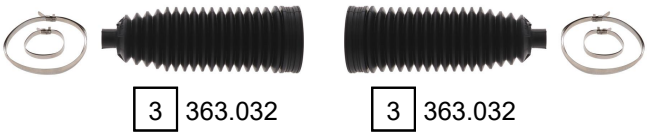

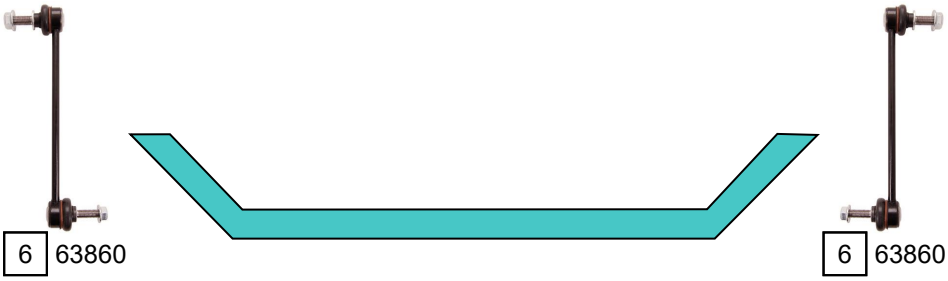

Ref.	Sidem Ref.	Description	OE-number	Measures	Ref.	Sidem Ref.	Description	OE-number	Measures
1	63768	stabiliser link left	991 343 069 02	L:260	4	63334	tie rod end	991 347 131 00	c:15 th:FM14X1.5R
2	63769	stabiliser link right	991 343 070 02	L:260	5	63711	axial joint	991 347 322 00	th:MM14X1.5R L:227
3	363.032	steering rack gaiter	991 347 191 01	D:56 d:13.5 L:184	6	63860	stabiliser link	991 333 071 02	L:235

Copyright 2021

PORSCHE
924

924 | 08/1975 - 07/1988

-> CHAS 92DN4 02093

1 63234

1 63234

-> 12/1977

2 63186

2 63186

CHAS 92CN4 02198 ->

3 63487 A

4 63487 B

5 63188
01/1978 ->

5 63188
01/1978 ->

Ref.	Sidem Ref.	Description	OE-number	Measures	Ref.	Sidem Ref.	Description	OE-number	Measures
1	63234	tie rod end	477 419 815	c:12.6 th:FM14x1.5R	4	63487 B	TCA right wbj	171 407 153 D S2	c:17
2	63186	ball joint lower	171 407 365 D	c:15	5	63188	ball joint lower	171 407 365 G	c:17
3	63487 A	TCA left wbj	171 407 153 D S1	c:17					

Copyright 2021

944
944 CONVERTIBLE

09/1981 - 07/1991
12/1988 - 07/1991

1 302.035 1 302.035

-> CHAS 94DN4 02644
-> CHAS 94DN4 02812

2 63234

2 63234

3 63188

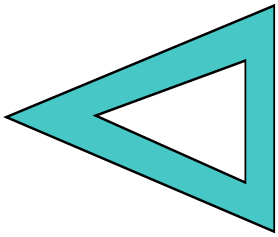

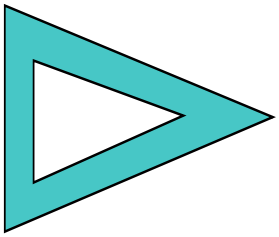

3 63188

Ref.	Sidem Ref.	Description	OE-number	Measures	Ref.	Sidem Ref.	Description	OE-number	Measures
1	302.035	steering rack gaiter	191 419 831	D:41 d:25 L:120	3	63188	ball joint lower	171 407 365 G	c:17
2	63234	tie rod end	477 419 815	c:12.6 th:FM14x1.5R					

Copyright 2021

PORSCHE
BOXSTER

BOXSTER (986) 09/1996 - 12/2004

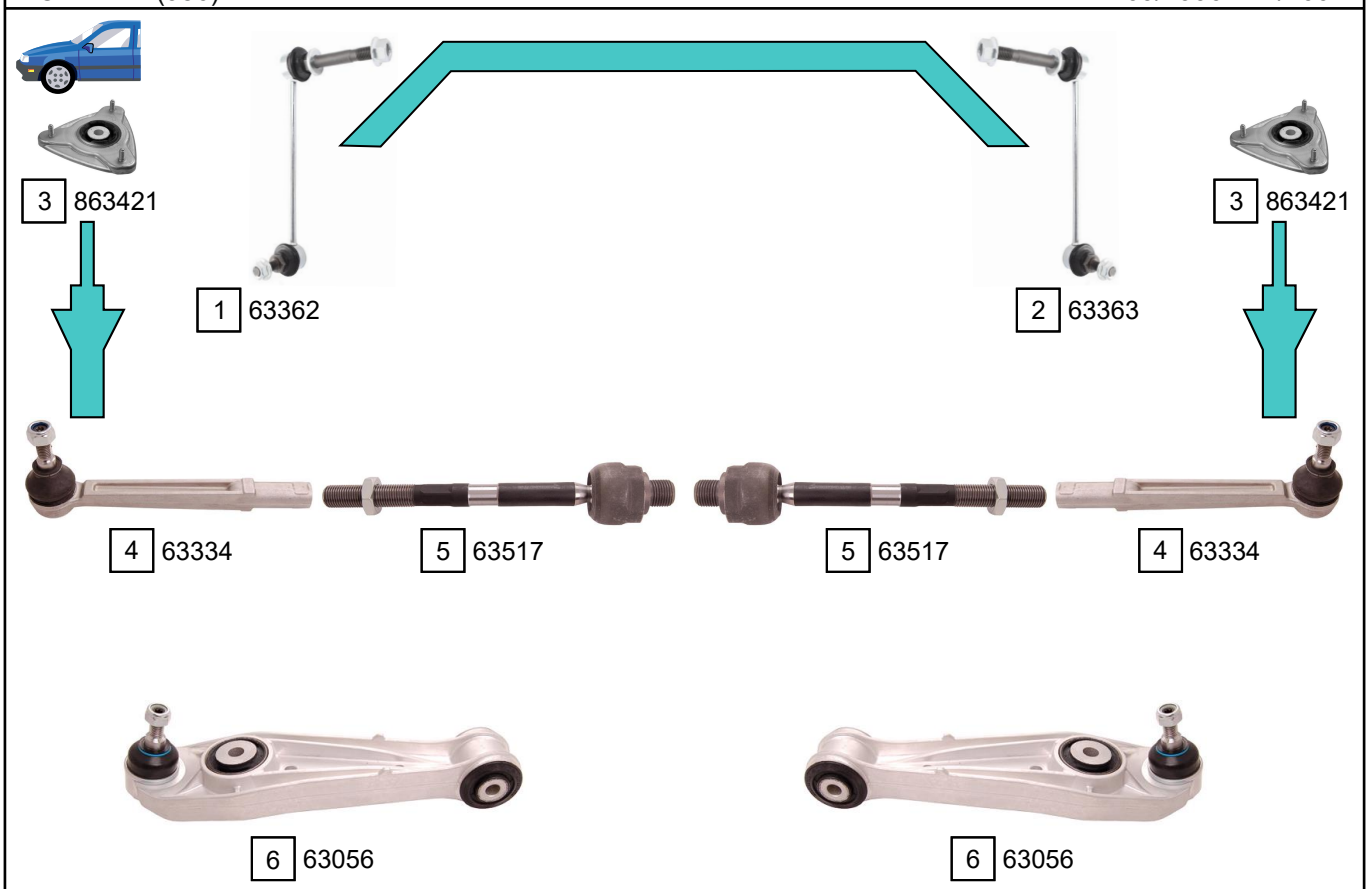

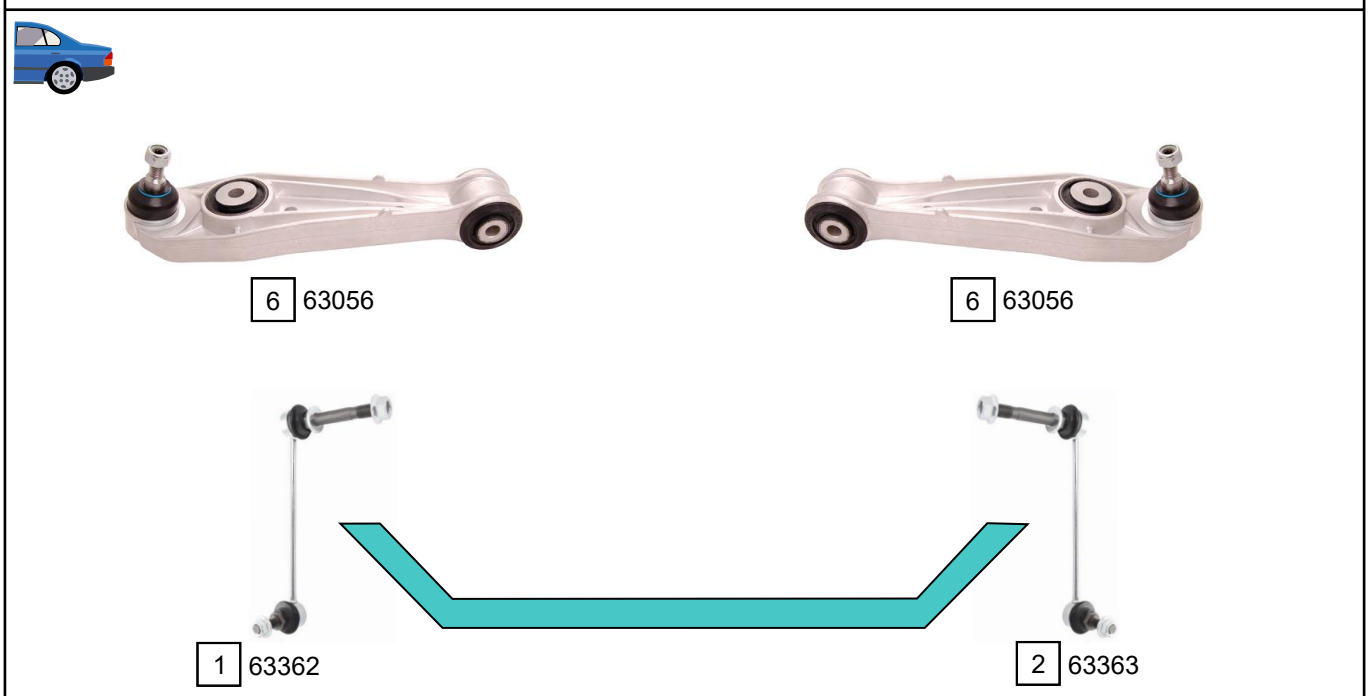

Ref.	Sidem Ref.	Description	OE-number	Measures	Ref.	Sidem Ref.	Description	OE-number	Measures
1	63362	stabiliser link left	996 343 069 04	L:200	4	63334	tie rod end	991 347 131 00	c:15 th:FM14X1.5R
2	63363	stabiliser link right	996 343 070 04	L:200	5	63517	axial joint	996 347 322 03	th:MM16X1.5R L:197
3	863421	strut mount	997 343 018 01	di:14.2 do:59 L:43.2	6	63056	TCA	996 341 053 17	c:17

Copyright 2021

PORSCHE
BOXSTER - CAYMAN

BOXSTER (987) 11/2004 - 05/2012
CAYMAN (987) 11/2005 - 05/2013
BOXSTER SPIDER (987) 09/2007 - 12/2011

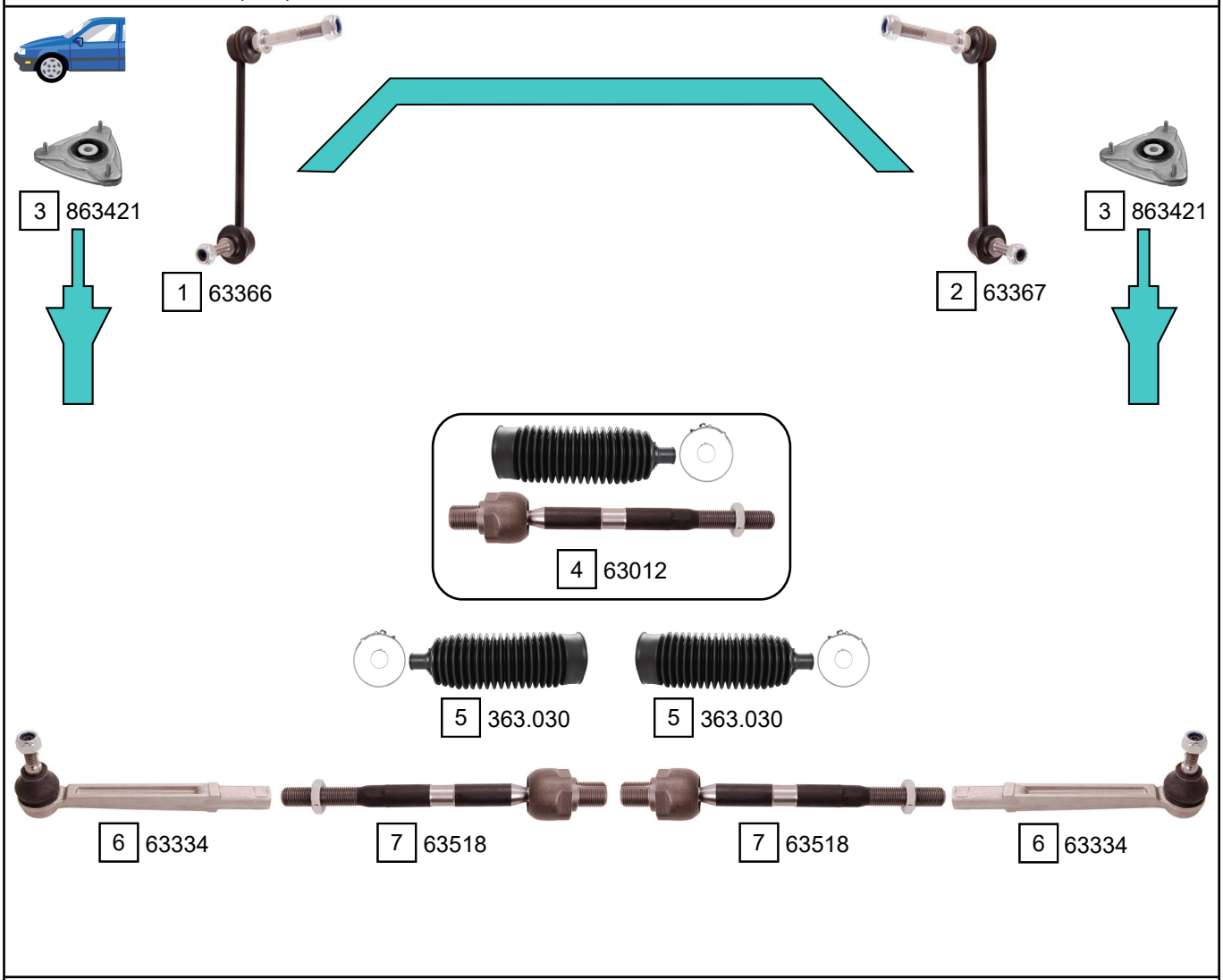

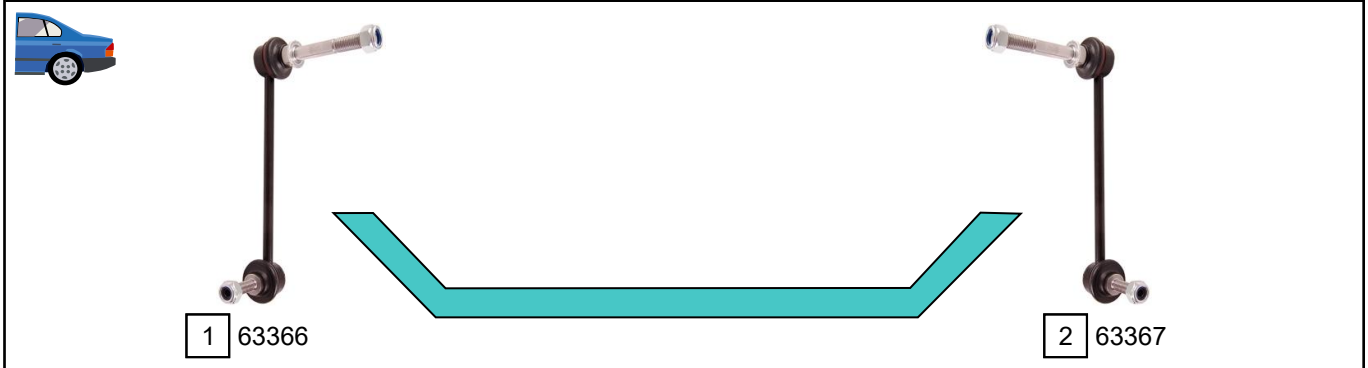

Ref.	Sidem Ref.	Description	OE-number	Measures	Ref.	Sidem Ref.	Description	OE-number	Measures
1	63366	stabiliser link left	997 343 069 04	L:200	5	363.030	steering rack gaiter	997 347 191 00	D:51 d:14.5 L:163
2	63367	stabiliser link right	997 343 070 04	L:200	6	63334	tie rod end	991 347 131 00	c:15 th:FM14X1.5R
3	863421	strut mount	997 343 018 01	di:14.2 do:59 L:43.2	7	63518	axial joint	997 347 322 01	th:MM18X1.5R L:213
4	63012	axial joint kit	997 347 322 01 S1	D:51 th:MM14X1.5R					

Copyright 2021

PORSCHE
BOXSTER - CAYMAN

BOXSTER (981)	04/2012 - 04/2016
CAYMAN (981)	03/2013 - 04/2016
BOXSTER SPIDER (981)	07/2015 - 04/2016

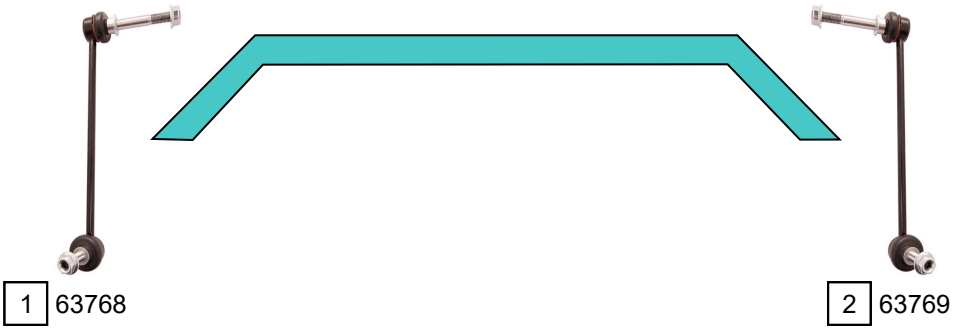

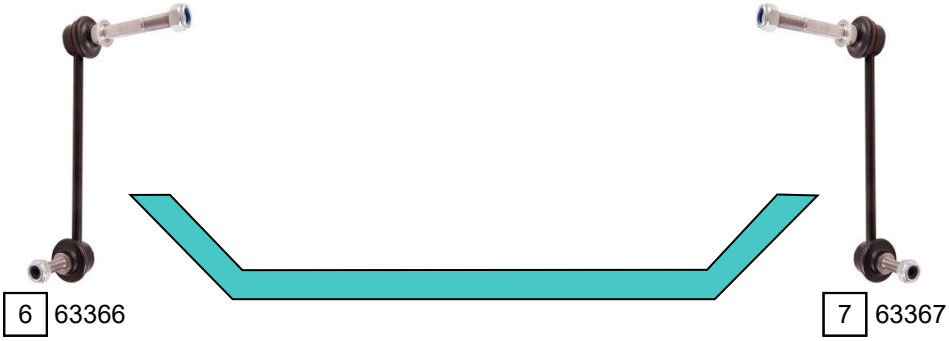

Ref.	Sidem Ref.	Description	OE-number	Measures	Ref.	Sidem Ref.	Description	OE-number	Measures
1	63768	stabiliser link left	991 343 069 02	L:260	5	63711	axial joint	991 347 322 00	th:MM14X1.5R L:227
2	63769	stabiliser link right	991 343 070 02	L:260	6	63366	stabiliser link left	997 343 069 04	L:200
3	363.032	steering rack gaiter	991 347 191 01	D:56 d:13.5 L:184	7	63367	stabiliser link right	997 343 070 04	L:200
4	63334	tie rod end	991 347 131 00	c:15 th:FM14X1.5R					

Copyright 2021

PORSCHE
BOXSTER - CAYMAN

718 BOXSTER (982) 04/2016 ->
718 CAYMAN (982) 04/2016 ->
718 BOXSTER SPIDER (982) 07/2019 ->

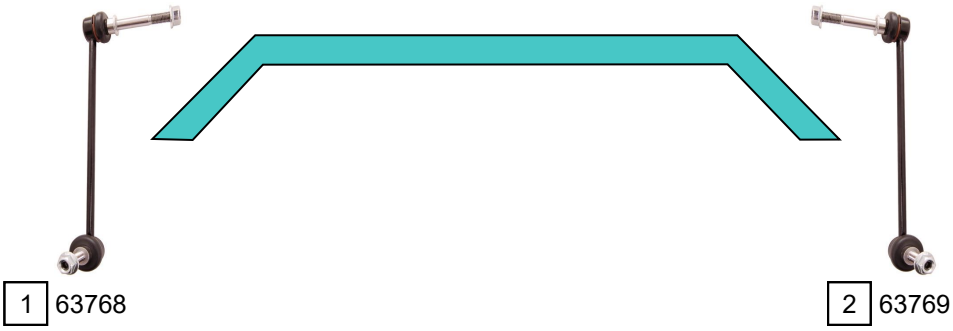

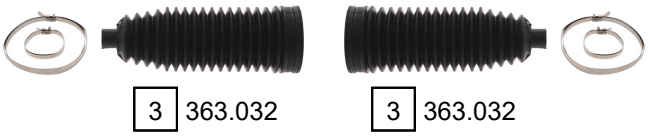

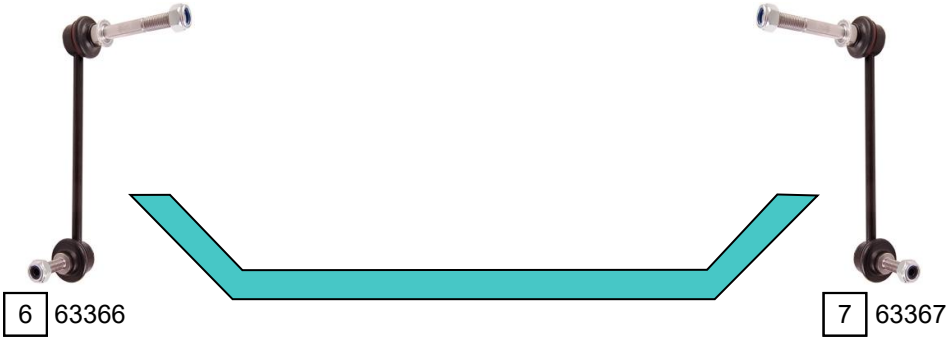

Ref.	Sidem Ref.	Description	OE-number	Measures	Ref.	Sidem Ref.	Description	OE-number	Measures
1	63768	stabiliser link left	991 343 069 02	L:260	5	63711	axial joint	991 347 322 00	th:MM14X1.5R L:227
2	63769	stabiliser link right	991 343 070 02	L:260	6	63366	stabiliser link left	997 343 069 04	L:200
3	363.032	steering rack gaiter	991 347 191 01	D:56 d:13.5 L:184	7	63367	stabiliser link right	997 343 070 04	L:200
4	63334	tie rod end	991 347 131 00	c:15 th:FM14X1.5R					

Copyright 2021

PORSCHE
CAYENNE

CAYENNE (955,957-9PA) 09/2002 - 09/2010

1 863816 Ø37

2 863818 Ø38

1 863816 Ø37

2 863818 Ø38

4 837404 EXC. AIR SUSP.

3 63565

3 63565

4 837404 EXC. AIR SUSP.

5 305.038

5 305.038

6 63732

8 63613

8 63613

7 63733

9 63626

10 63627

UPPER

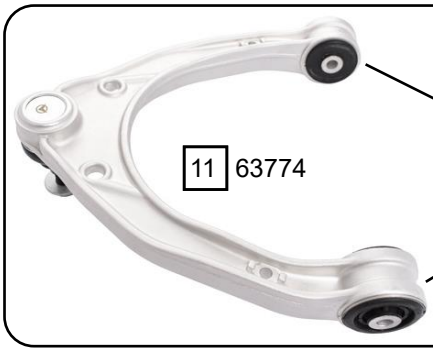

11 63774

12 863636

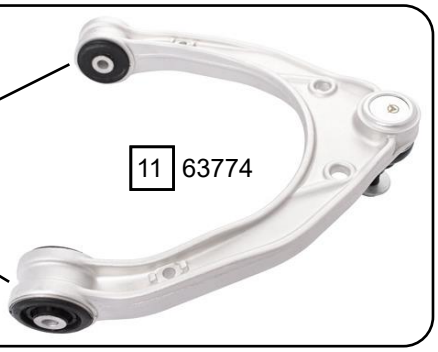

11 63774

Ref.	Sidem Ref.	Description	OE-number	Measures	Ref.	Sidem Ref.	Description	OE-number	Measures
1	863816	stabiliser mounting	955 343 792 50	di:36	7	63733	tie rod end	955 347 132 22	c:16.5 th:FM16X1.5R
2	863818	stabiliser mounting	955 343 792 61 S1	di:38	8	63613	axial joint	Part of	th:MM16X1.5R L:293
3	63565	stabiliser link	955 343 069 00	L:197	9	63626	tie rod	955 347 031 22	c:16.5
4	837404	strut mount	955 343 018 00	di:12.2 L:38	10	63627	tie rod	955 347 032 22	c:16.5
5	305.038	steering rack gaiter	955 347 191 10	D:66 d:16 L:195	11	63774	TCA wbj	955 341 027 02	c:17
6	63732	tie rod end	955 347 131 22	c:16.5 th:FM16X1.5R	12	863636	silentblock for TCA	Part of	di:10.2 do:40 (*)

Copyright 2021

CAYENNE (955,957-9PA) 09/2002 - 09/2010

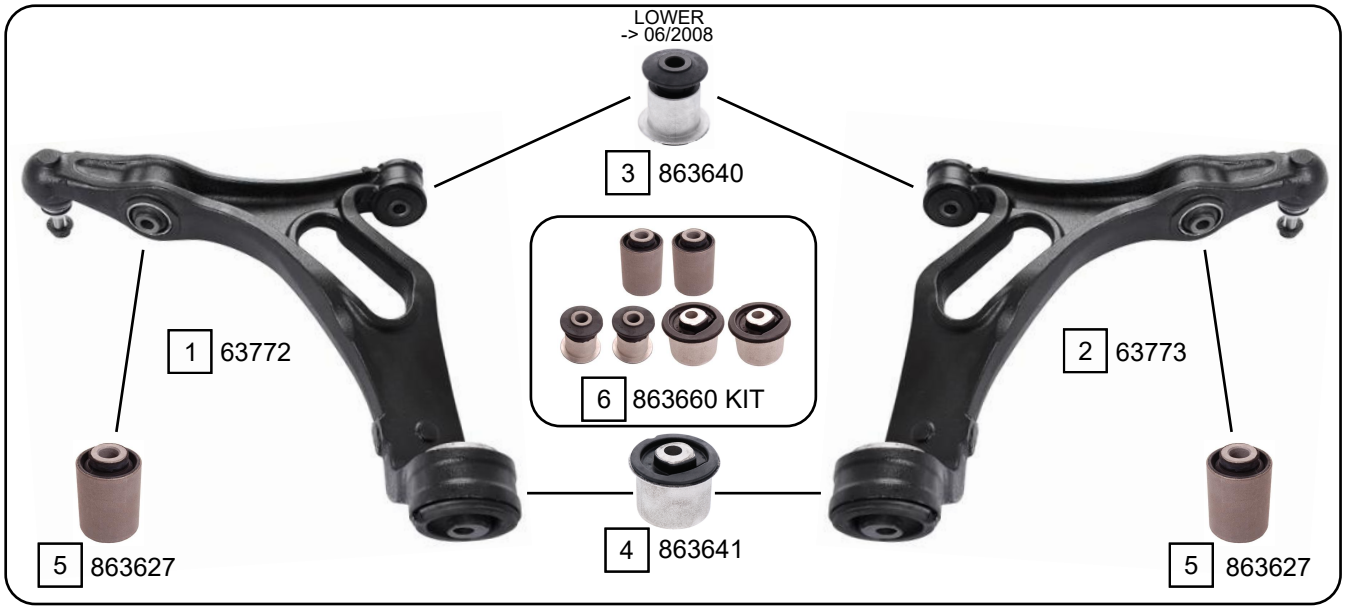

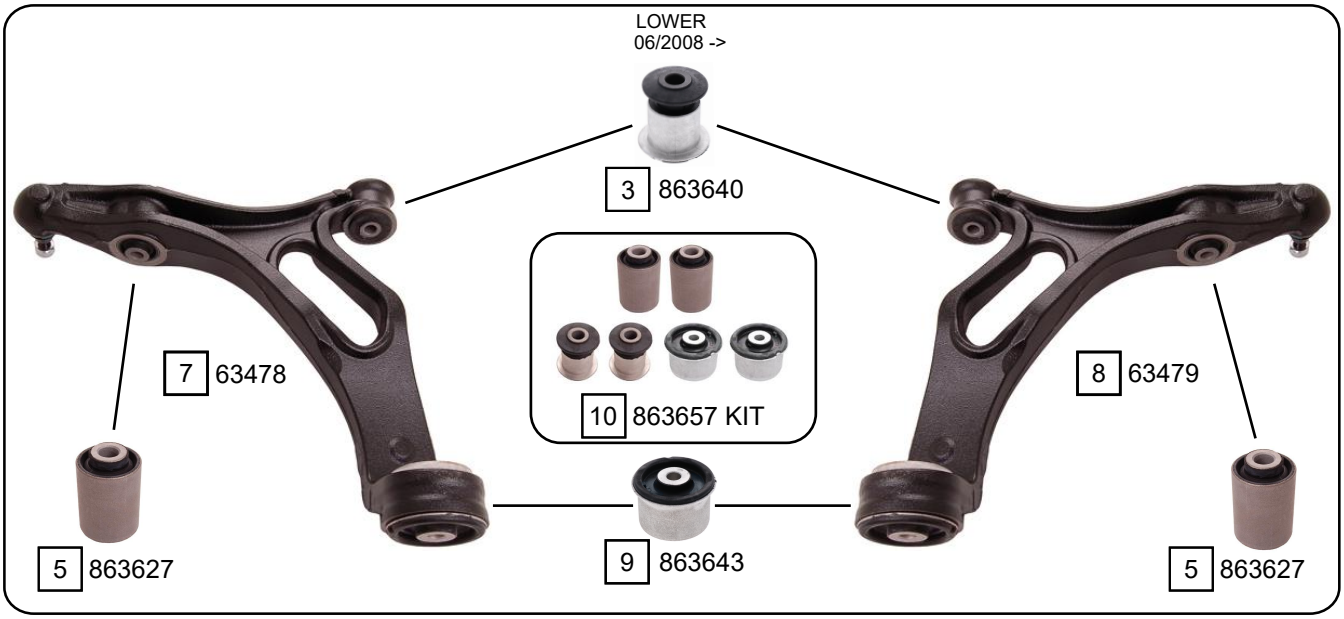

Ref.	Sidem Ref.	Description	OE-number	Measures	Ref.	Sidem Ref.	Description	OE-number	Measures
1	63772	TCA left wbj	955 341 017 33	c:20.6	6	863660 KIT	silentblock kit	955 341 242 04 S2	
2	63773	TCA right wbj	955 341 018 33	c:20.6	7	63478	TCA left wbj	955 341 017 61	c:20.6
3	863640	silentblock for TCA	955 341 588 10	di:14.3 do:40 (*)	8	63479	TCA right wbj	955 341 018 61	c:20.6
4	863641	silentblock for TCA	955 341 242 04	di:14.3 do:60.3 (*)	9	863643	silentblock for TCA	955 341 242 62	di:14.3 do:72.2 (*)
5	863627	silentblock for TCA	955 343 243 01	di:14.2 do:48 (*)	10	863657 KIT	silentblock kit	955 341 242 62 S1	

Copyright 2021

PORSCHE
CAYENNE

CAYENNE (955,957-9PA) 09/2002 - 09/2010

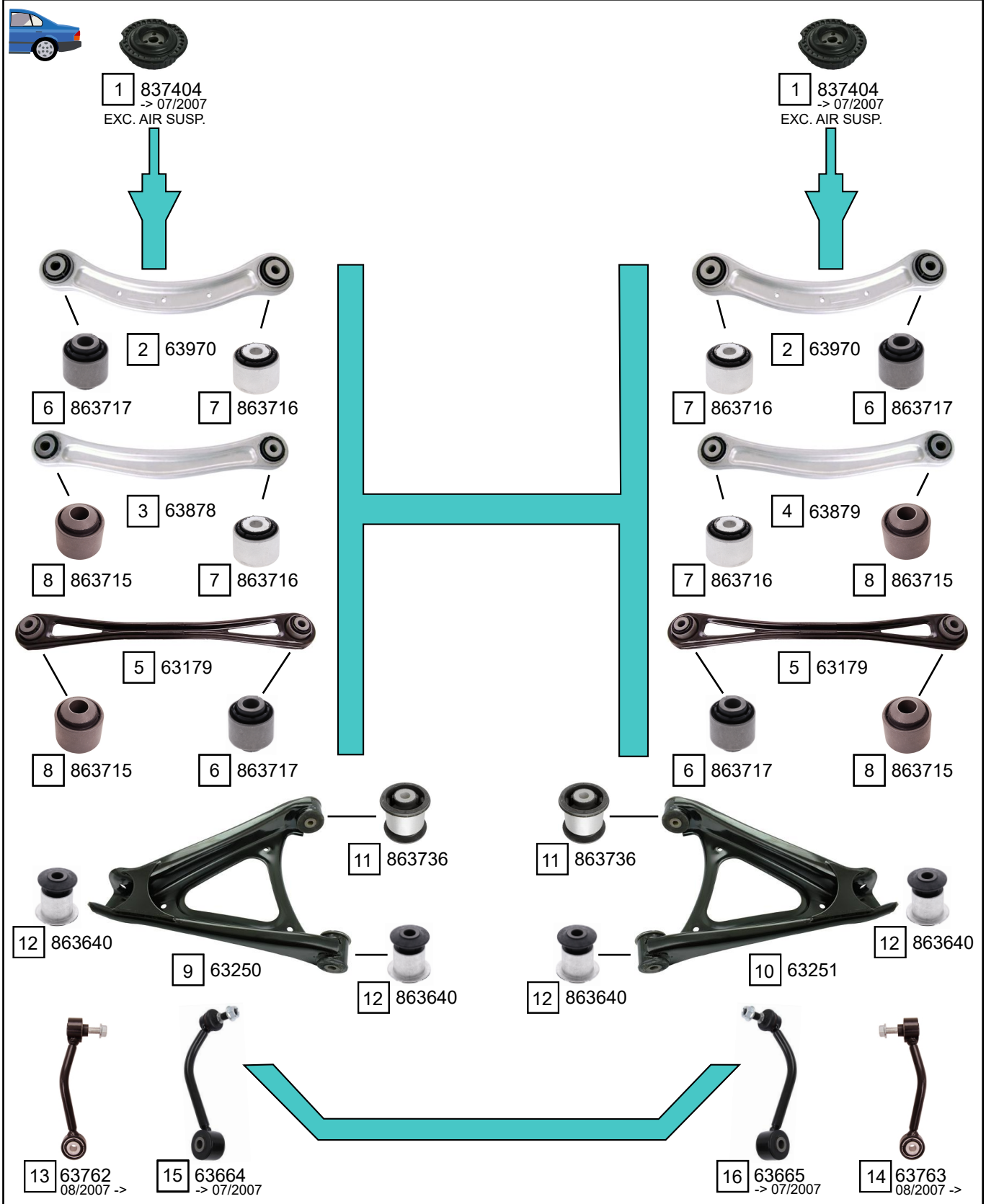

Ref.	Sidem Ref.	Description	OE-number	Measures	Ref.	Sidem Ref.	Description	OE-number	Measures
1	837404	strut mount	955 343 018 00	di:12.2 L:38	9	63250	TCA left wobj	955 331 017 11	
2	63970	TCA	955 331 047 10	L:300	10	63251	TCA right wobj	955 331 018 11	
3	63878	TCA left	955 331 049 00	L:360	11	863736	silentblock for TCA	Part of	di:14.1 do:60
4	63879	TCA right	955 331 050 00	L:360	12	863640	silentblock for TCA	955 341 588 10	di:14.3 do:40 (*)
5	63179	track rod	955 331 045 32	L:500	13	63762	stabiliser link left	955 333 069 21	L:200
6	863717	silentblock for TCA	Part of	di:14.2 do:44.1 (*)	14	63763	stabiliser link right	955 333 070 21	L:200
7	863716	silentblock for TCA	Part of	di:12 do:44.4 (*)	15	63664	stabiliser link left	955 333 069 11	L:200
8	863715	silentblock for TCA	Part of	di:16 do:44 (*)	16	63665	stabiliser link right	955 333 070 11	L:200

Copyright 2021

CAYENNE (958-92A) 06/2010 ->

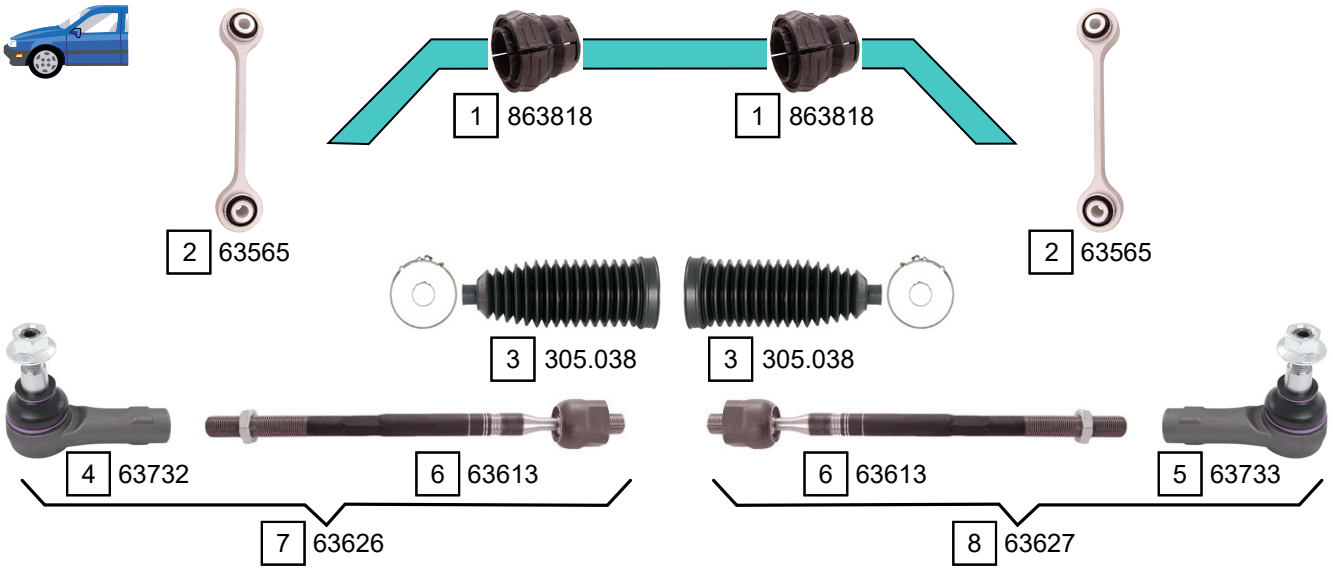

UPPER

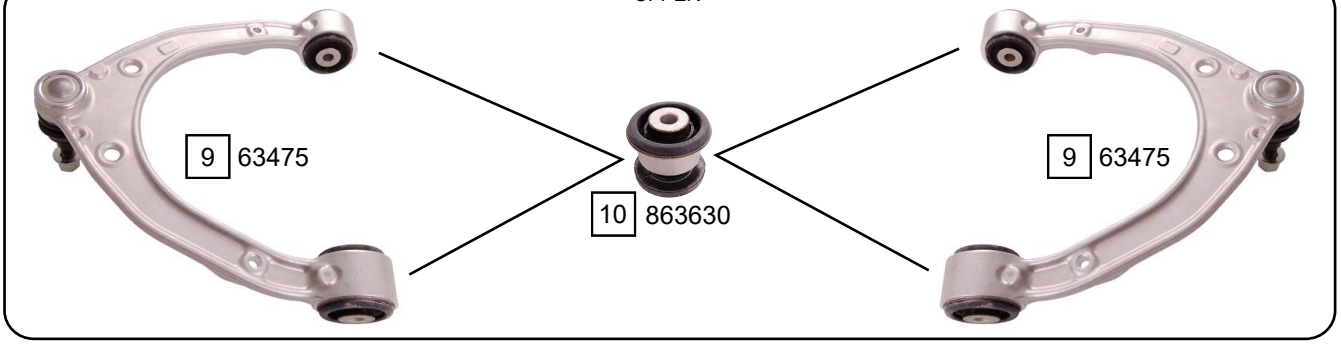

LOWER

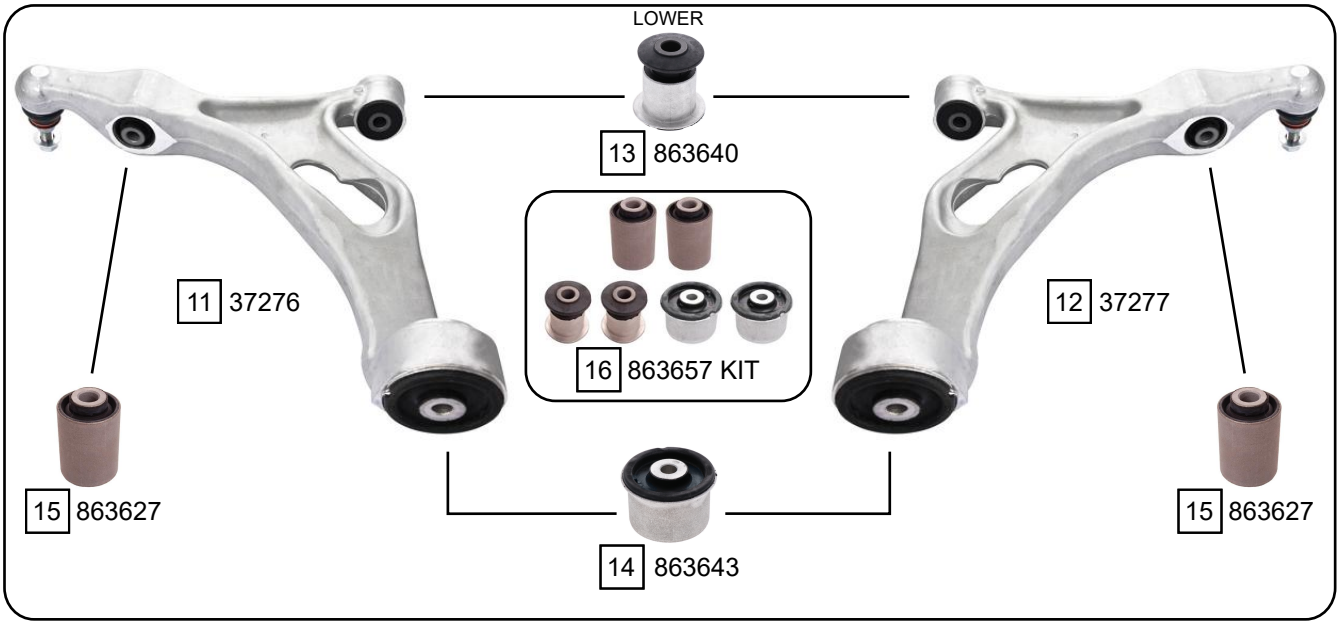

Ref.	Sidem Ref.	Description	OE-number	Measures	Ref.	Sidem Ref.	Description	OE-number	Measures
1	863818	stabiliser mounting	955 343 792 61 S1	di:38	9	63475	TCA wbj	958 341 051 00	c:16.8
2	63565	stabiliser link	955 343 069 00	L:197	10	863630	silentblock for TCA	Part of	di:10.1 do:40.3 (*)
3	305.038	steering rack gaiter	955 347 191 10	D:66 d:16 L:195	11	37276	TCA left wbj	958 341 053 00	c:20.9
4	63732	tie rod end	955 347 131 22	c:16.5 th:FM16X1.5R	12	37277	TCA right wbj	958 341 054 00	c:20.9
5	63733	tie rod end	955 347 132 22	c:16.5 th:FM16X1.5R	13	863640	silentblock for TCA	955 341 588 10	di:14.3 do:40 (*)
6	63613	axial joint	Part of	th:MM16X1.5R L:293	14	863643	silentblock for TCA	955 341 242 62	di:14.3 do:72.2 (*)
7	63626	tie rod	955 347 031 22	c:16.5	15	863627	silentblock for TCA	955 343 243 01	di:14.2 do:48 (*)
8	63627	tie rod	955 347 032 22	c:16.5	16	863657 KIT	silentblock kit	955 341 242 62 S1	

Copyright 2021

PORSCHE
CAYENNE

CAYENNE (958-92A) 06/2010 ->

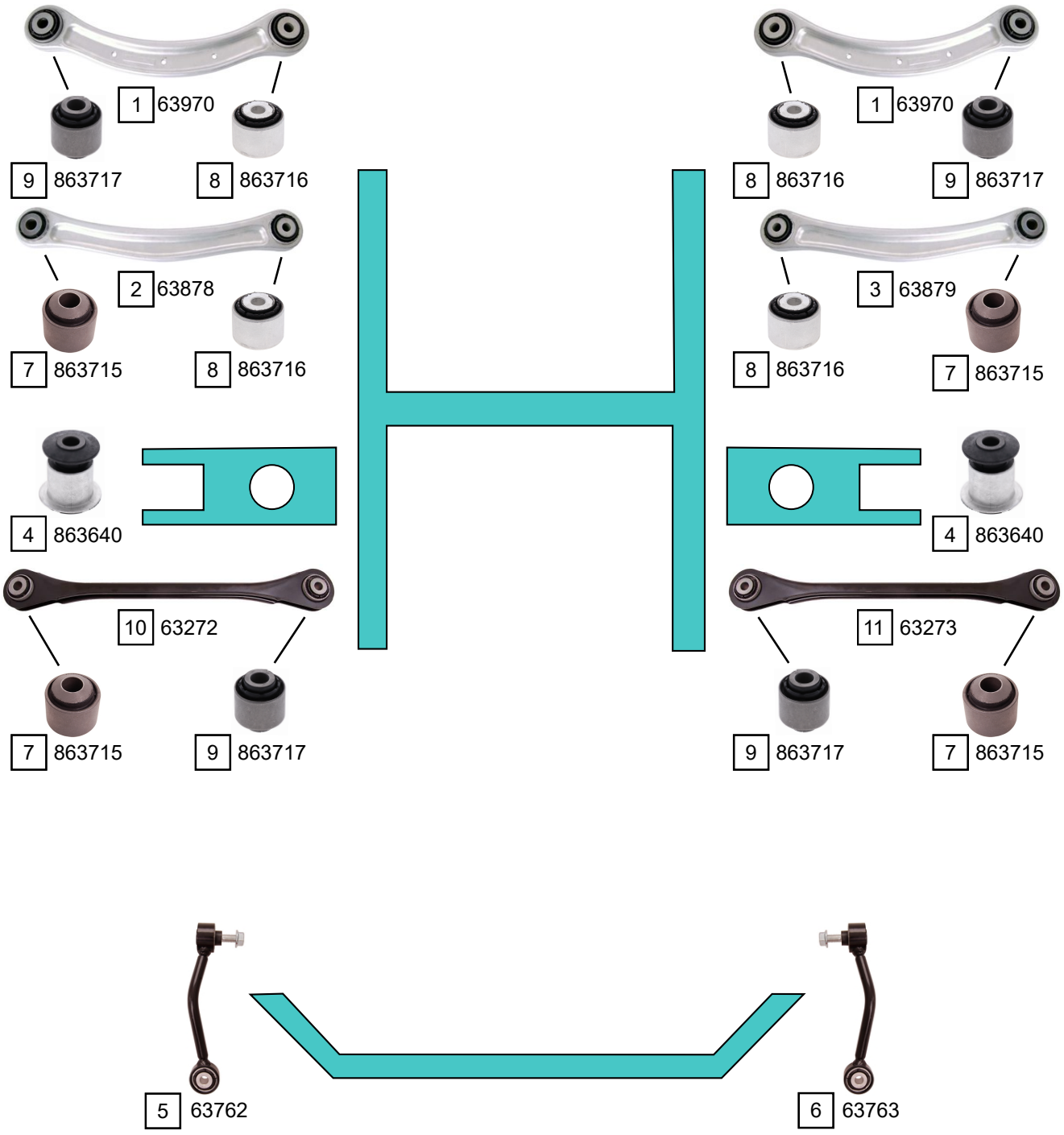

Ref.	Sidem Ref.	Description	OE-number	Measures	Ref.	Sidem Ref.	Description	OE-number	Measures
1	63970	TCA	955 331 047 10	L:300	7	863715	silentblock for TCA	Part of	di:16 do:44 (*)
2	63878	TCA left	955 331 049 00	L:360	8	863716	silentblock for TCA	Part of	di:12 do:44.4 (*)
3	63879	TCA right	955 331 050 00	L:360	9	863717	silentblock for TCA	Part of	di:14.2 do:44.1 (*)
4	863640	silentblock for TCA	955 341 588 10	di:14.3 do:40 (*)	10	63272	track rod	958 331 045 00	L:500
5	63762	stabiliser link left	955 333 069 21	L:200	11	63273	track rod	958 331 046 00	L:500
6	63763	stabiliser link right	955 333 070 21	L:200					

Copyright 2021

CAYENNE (9YA) 05/2017 ->

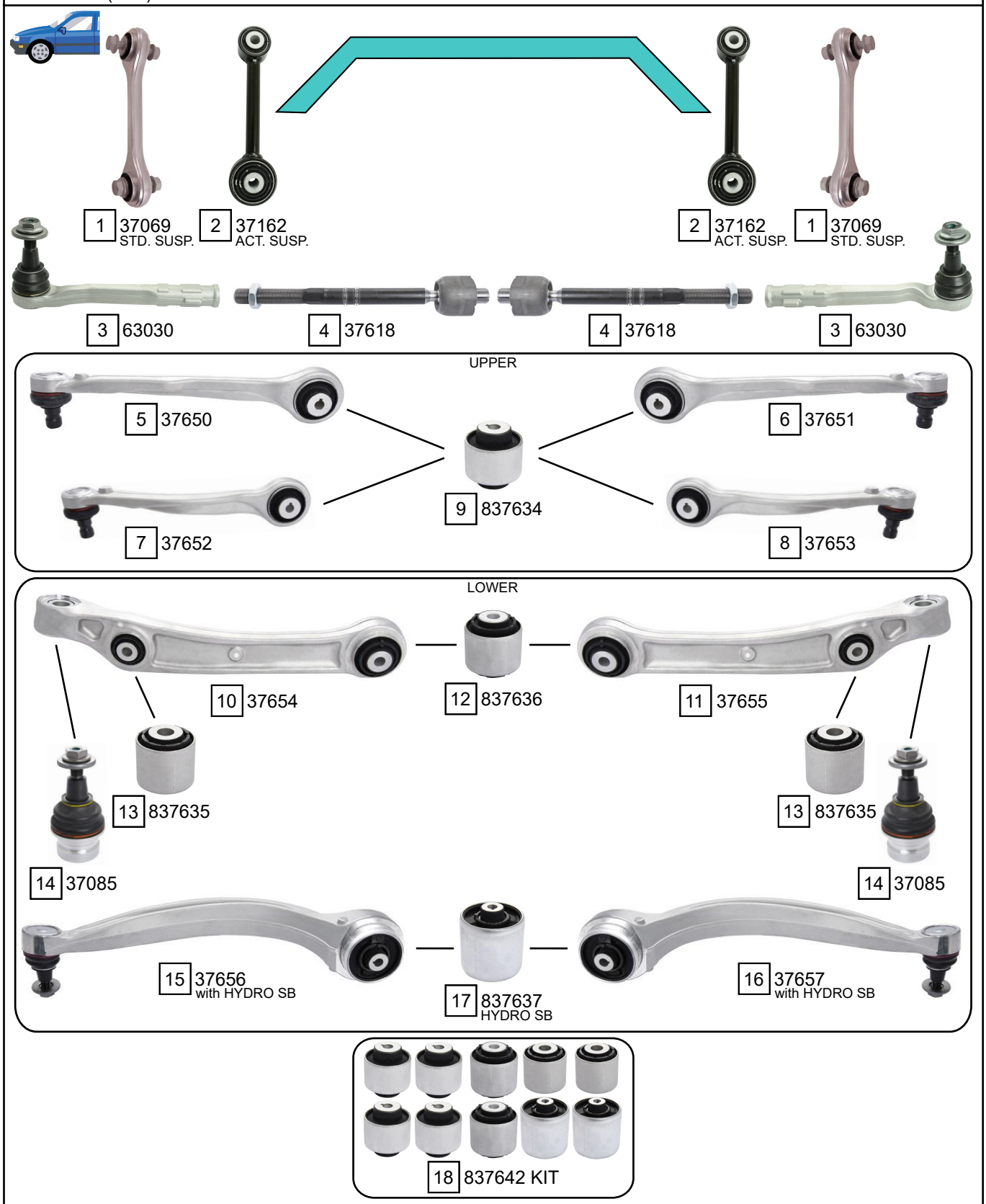

Ref.	Sidem Ref.	Description	OE-number	Measures	Ref.	Sidem Ref.	Description	OE-number	Measures
1	37069	stabiliser link	4G0 411 317 A	L:170	10	37654	TCA left wobj	958 407 151 00	c:19.3 L:371
2	37162	stabiliser link	PAB 411 317	L:170	11	37655	TCA right wobj	958 407 152 00	c:19.3 L:371
3	63030	tie rod end	958 423 811 A	c:17.1 th:FM16X1.5R	12	837636	silentblock for TCA	Part of	di:12.1 do:55.2 (*)
4	37618	axial joint	PAB 423 810 A	th:MM16X1.5R L:235	13	837635	silentblock for TCA	Part of	di:12.3 do:43.8 (*)
5	37650	TCA left wbj	958 407 505 C	c:18	14	37085	ball joint	958 407 689 C	c:20 do:49
6	37651	TCA right wbj	958 407 506 C	c:18	15	37656	TCA left wbj	958 407 693 00	c:19.5
7	37652	TCA left wbj	958 407 509 C	c:18	16	37657	TCA right wbj	958 407 694 00	c:19.5
8	37653	TCA right wbj	958 407 510 C	c:18	17	837637	silentblock for TCA	Part of	di:12 do:80 (*)
9	837634	silentblock for TCA	Part of	di:10.2 do:46.3 (*)	18	837642 KIT	silentblock kit	Part of	

Copyright 2021

PORSCHE
CAYENNE

CAYENNE (9YA) 05/2017 ->

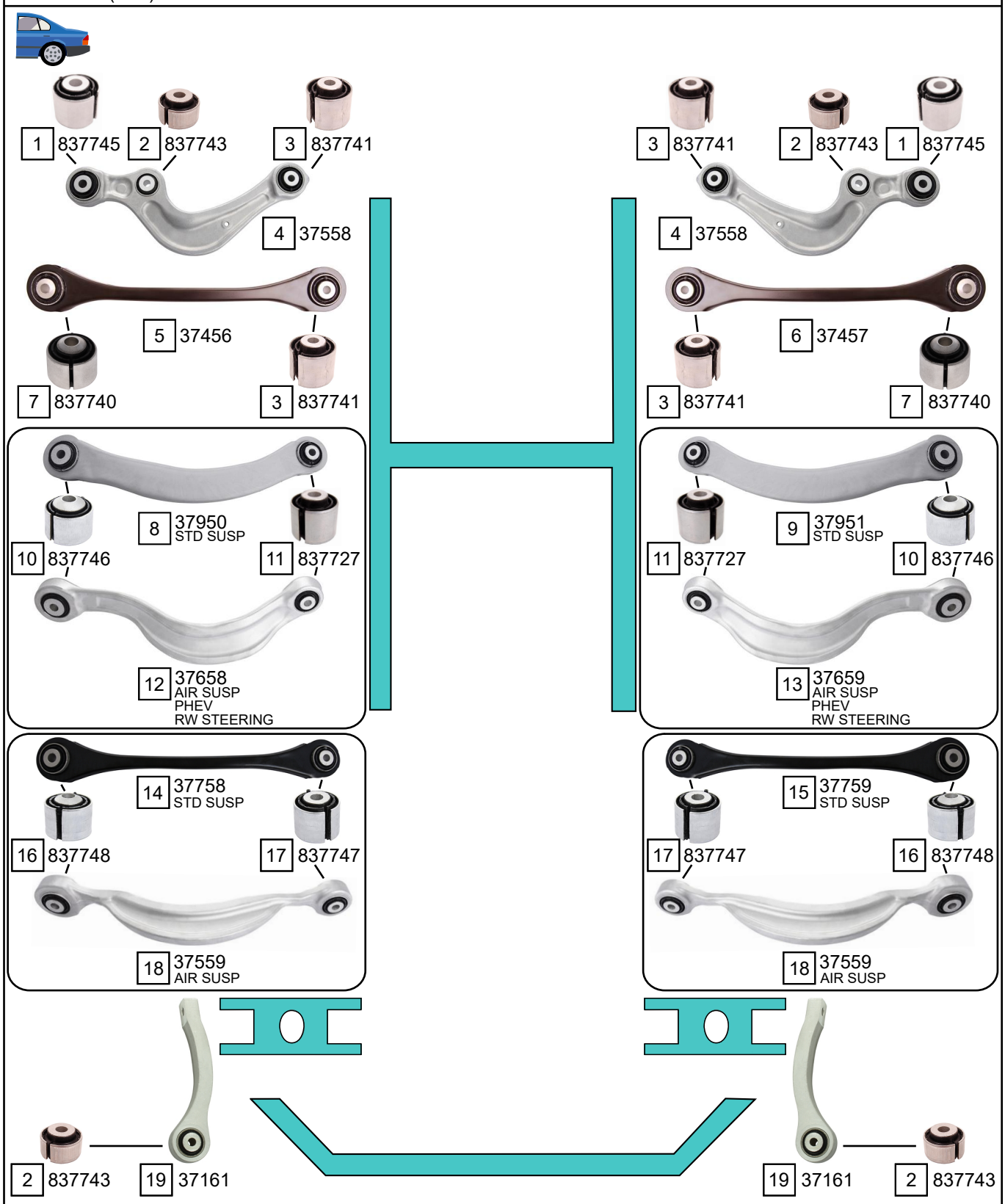

Ref.	Sidem Ref.	Description	OE-number	Measures	Ref.	Sidem Ref.	Description	OE-number	Measures
1	837745	silentblock for TCA	Part of	di:12 do:44 (*)	11	837727	silentblock for TCA	Part of	di:12 do:44.2 (*)
2	837743	silentblock for TCA	Part of	di:10.3 do:36.4 (*)	12	37658	track rod	PAB 505 397	L:405
3	837741	silentblock for TCA	Part of	di:10.2 do:40 (*)	13	37659	track rod	PAB 505 398	L:405
4	37558	TCA	958 505 323 G	L:295	14	37758	track rod	PAB 501 529 A	L:445
5	37456	track rod	PAB 505 291 A	L:360	15	37759	track rod	PAB 501 530	L:445
6	37457	track rod	PAB 505 292 A	L:360	16	837748	silentblock for TCA	Part of	di:14.5 do:50 (*)
7	837740	silentblock for TCA	Part of	di:12.5 do:45.7 (*)	17	837747	silentblock for TCA	Part of	di:12 do:42 (*)
8	37950	track rod	PAB 505 397 A	L:405	18	37559	track rod	PAB 501 529	L:445
9	37951	track rod	4M0 505 398 R	L:405	19	37161	stabiliser link	958 505 465 D	L:175
10	837746	silentblock for TCA	Part of	di:14.4 do:50.5 (*)					

Copyright 2021

MACAN (95B) 02/2014 ->

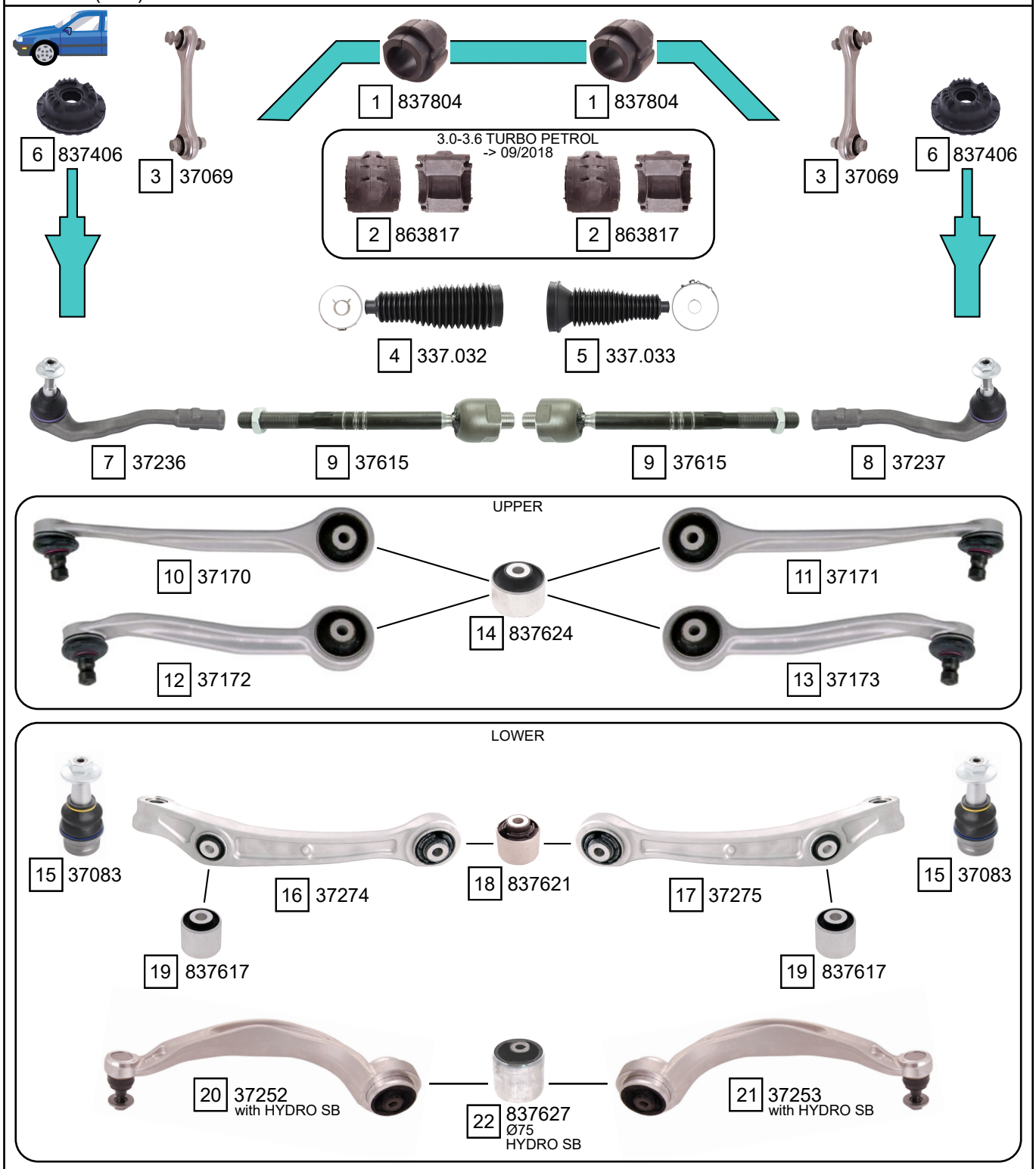

Ref.	Sidem Ref.	description	OE-number	measures	Ref.	Sidem Ref.	description	OE-number	measures
1	837804	stabiliser mounting	4D0 411 327 J	di:29	12	37172	TCA left wbj	8K0 407 509 B	c:16
2	863817	stabiliser mounting	95B 411 035	di:24.5	13	37173	TCA right wbj	8K0 407 510 B	c:16
3	37069	stabiliser link	4G0 411 317 A	L:170	14	837624	silentblock for TCA	8R0 407 515	di:10.2 do:46.2 (*)
4	337.032	steering rack gaiter	4G0 423 831	D:54 d:15.5 L:187	15	37083	ball joint	4G0 407 689 C	c:17.4 do:42
5	337.033	steering rack gaiter	4G0 423 832 A	D:79 d:15.5 L:201	16	37274	TCA left wobj	8K0 407 151 F	c:17
6	837406	strut mount	8K0 412 377 C	di:12.5 do:114 L:53.5	17	37275	TCA right wobj	8K0 407 152 F	c:17
7	37236	tie rod end left	4G0 423 811 A	c:14.7 th:FM16X1.5R	18	837621	silentblock for TCA	8K0 407 182 B	di:12.2 do:50.3 (*)
8	37237	tie rod end right	4G0 423 812 A	c:14.7 th:FM16X1.5R	19	837617	silentblock for TCA	4E0 407 181 B	di:12.3 do:43.8 (*)
9	37615	axial joint	4G0 423 810 A	th:MM16X1.5R L:236	20	37252	TCA left wbj	9A7 407 693 03	c:16.8
10	37170	TCA left wbj	8K0 407 505 B	c:16	21	37253	TCA right wbj	9A7 407 694 03	c:16.8
11	37171	TCA right wbj	8K0 407 506 B	c:16	22	837627	silentblock for TCA	8K0 407 183 F	di:13 do:75.2 (*)

Copyright 2021

PORSCHE
MACAN

MACAN (95B) 02/2014 ->

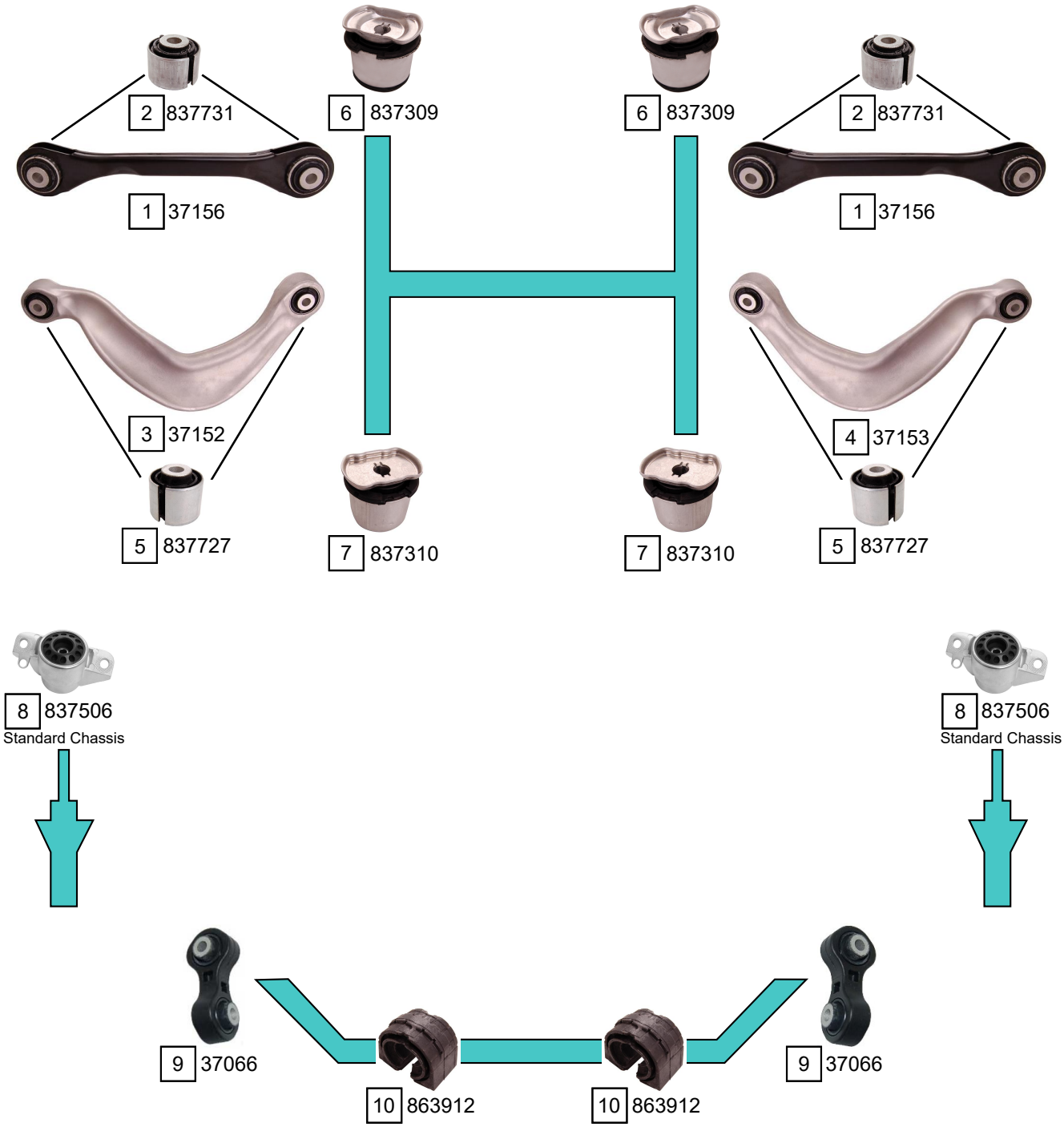

Ref.	Sidem Ref.	Description	OE-number	Measures	Ref.	Sidem Ref.	Description	OE-number	Measures
1	37156	track rod	8K0 501 529 L	L:283	6	837309	mounting axle body	8R0 505 145 K	di:19.5 do:80
2	837731	silentblock for TCA	Part of	di:12 do:44 (*)	7	837310	mounting axle body	8R0 505 145 A	di:20 do:80
3	37152	TCA left	8K0 505 323 H	L:362	8	837506	strut mount	8K0 513 353 E	di:10.6 do:73.5 L:76.2
4	37153	TCA right	8K0 505 324 H	L:362	9	37066	stabiliser link rear axle	95B 505 465	L:60
5	837727	silentblock for TCA	Part of	di:12 do:44.2 (*)	10	863912	stabiliser mounting	95B 511 035	di:23

Copyright 2021

PANAMERA (970) 09/2009 - 10/2016

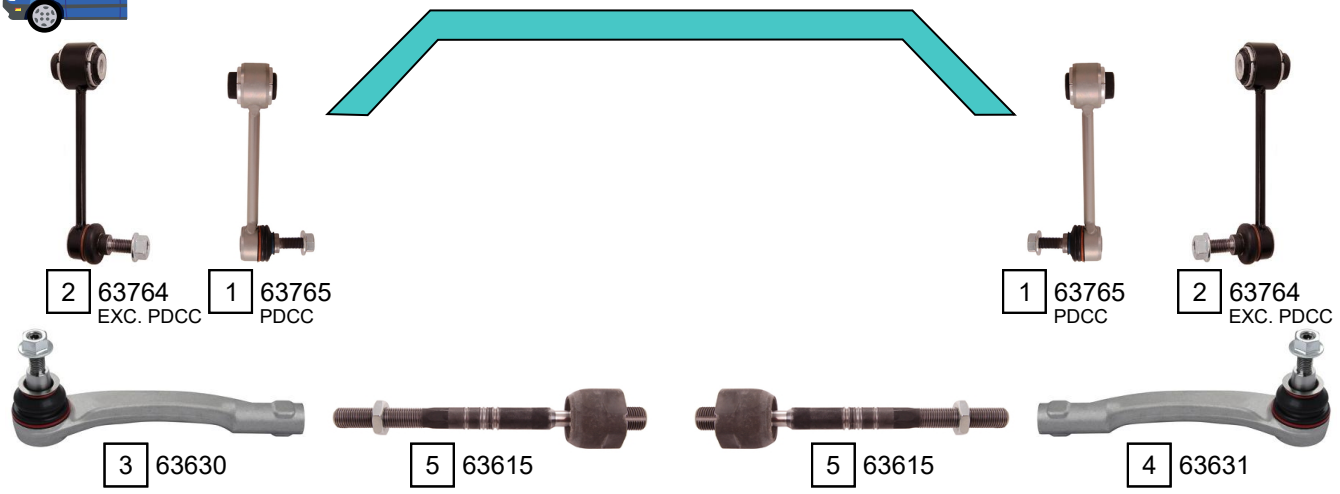

-> MJ 2013

UPPER

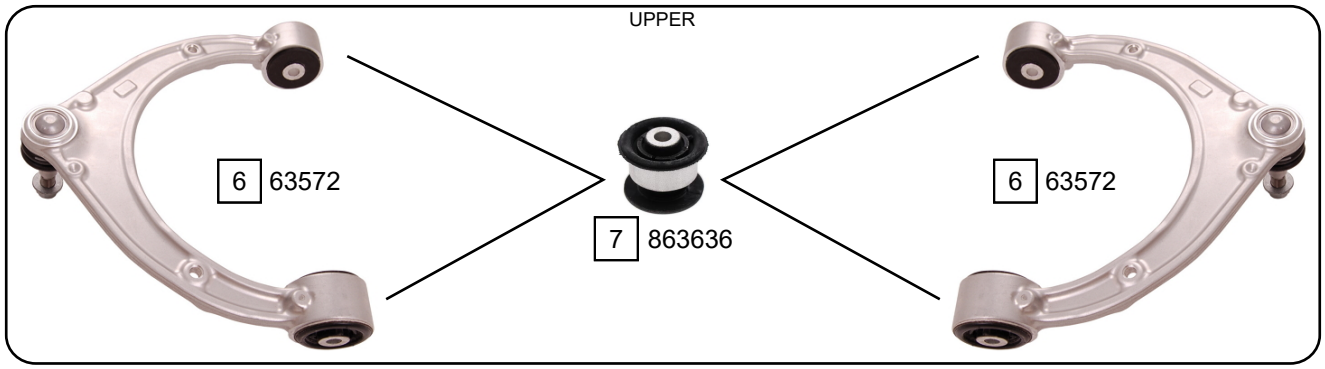

LOWER

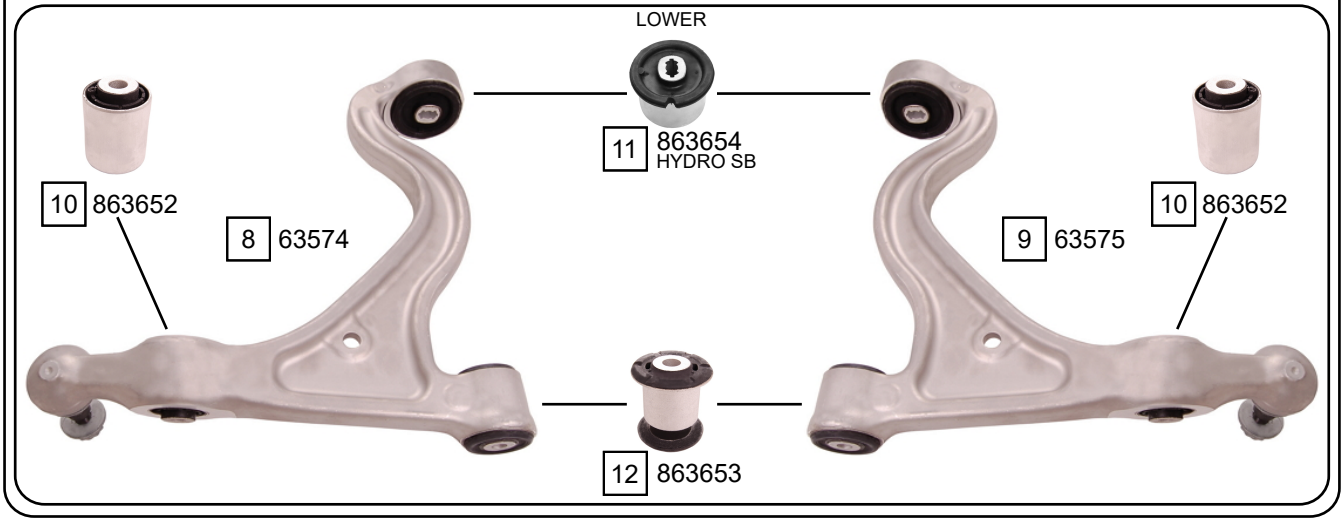

-> MJ 2013

Ref.	Sidem Ref.	Description	OE-number	Measures	Ref.	Sidem Ref.	Description	OE-number	Measures
1	63765	stabiliser link	970 343 069 23	L:157	8	63574	TCA left wbj	970 341 053 04	c:20.5
2	63764	stabiliser link	970 343 069 03	L:160	9	63575	TCA right wbj	970 341 054 04	c:20.5
3	63630	tie rod end left	970 347 131 01	c:16.8 th:FM14X1.5R	10	863652	silentblock for TCA	970 341 243 01	di:12 do:46 (*)
4	63631	tie rod end right	970 347 132 01	c:16.8 th:FM14X1.5R	11	863654	silentblock for TCA	970 341 245 02	di:12 do:72 (*)
5	63615	axial joint	970 347 133 00	th:MM16X1.5R L:189	12	863653	silentblock for TCA	970 341 251 01	di:12.1 do:40.1 (*)
6	63572	TCA wbj	970 341 051 10	c:15	13	863664 KIT	silentblock kit	970 341 245 02 S1	
7	863636	silentblock for TCA	Part of	di:10.2 do:40 (*)					

Copyright 2021

PORSCHE
PANAMERA

PANAMERA (970) 09/2009 - 10/2016

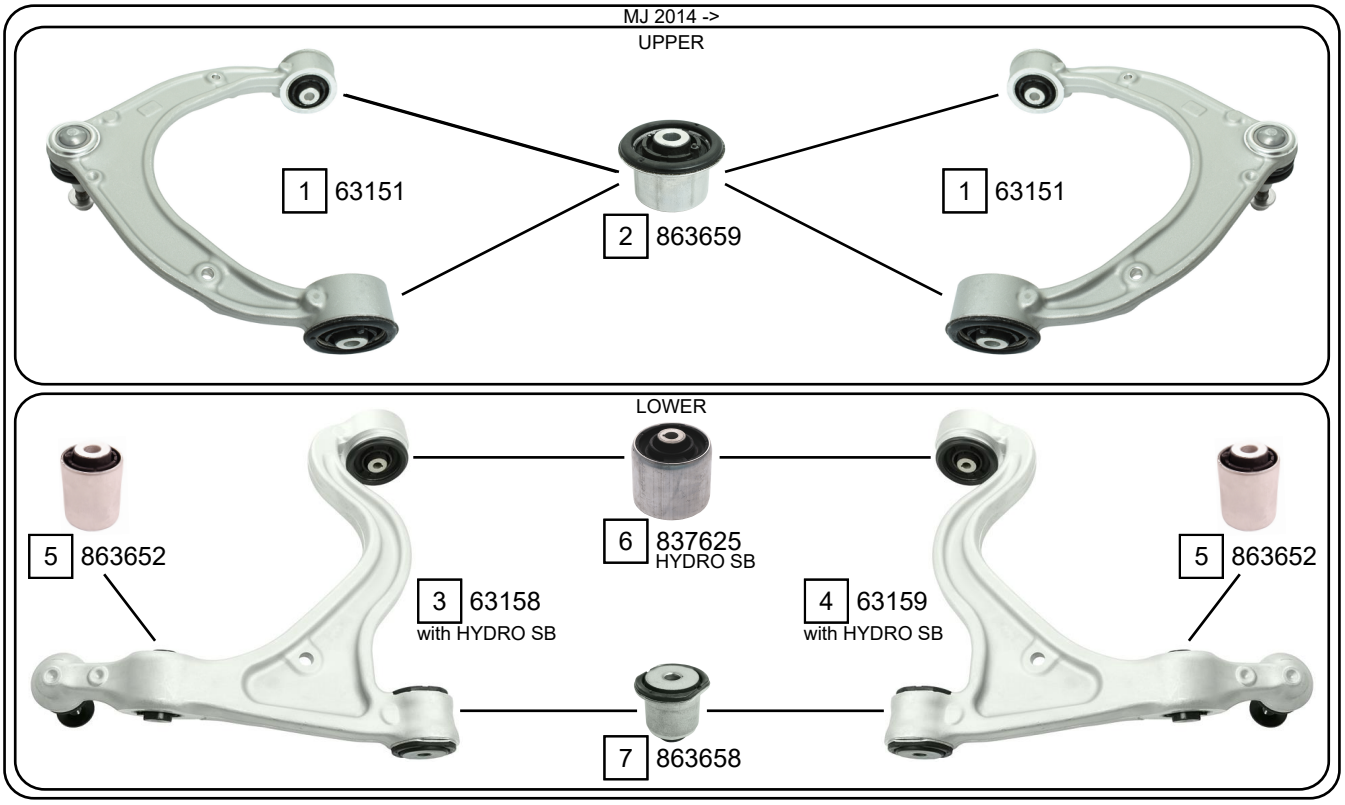

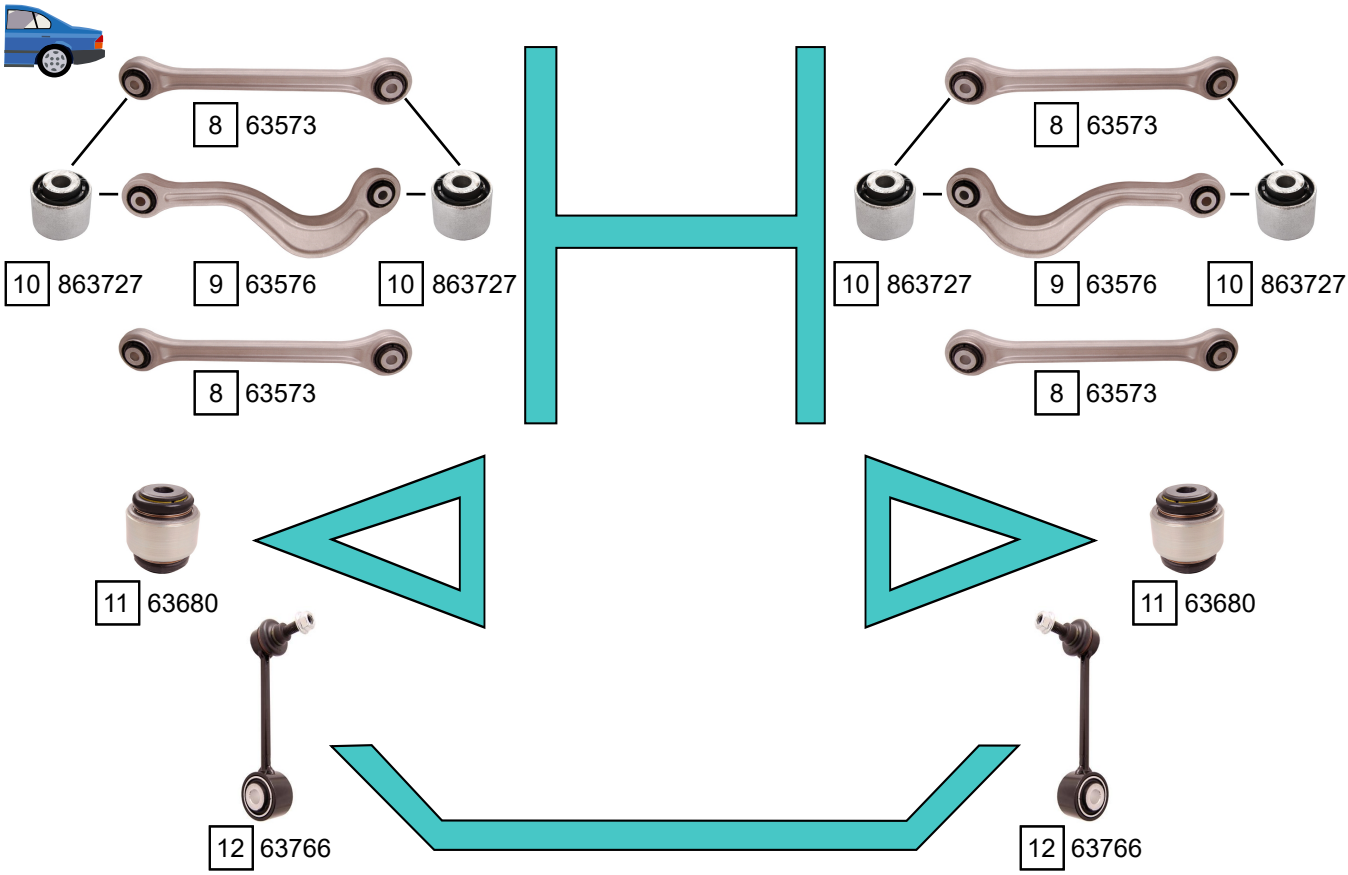

Ref.	Sidem Ref.	Description	OE-number	Measures	Ref.	Sidem Ref.	Description	OE-number	Measures
1	63151	TCA	970 341 051 23	c:15	7	863658	silentblock for TCA	970 341 241 22	di:12.15 do:46 (*)
2	863659	silentblock for TCA	Part of	di:10.2 do:44.1 (*)	8	63573	track rod	970 331 043 00	L:300
3	63158	TCA left wbj	970 341 053 24	c:20.5	9	63576	track rod	970 331 047 00	L:300
4	63159	TCA right wbj	970 341 054 24	c:20.5	10	863727	silentblock for TCA	Part of	di:12 do:40.2 (*)
5	863652	silentblock for TCA	970 341 243 01	di:12 do:46 (*)	11	63680	ball joint rear	970 331 244 00	di:12.1 do:47
6	837625	silentblock for TCA	970 341 245 21	di:12.1 do:74.8 (*)	12	63766	stabiliser link	970 333 069 05	L:150

Copyright 2021