ALHAMBRA (7V8, 7V9) 04/1996 - 03/2010

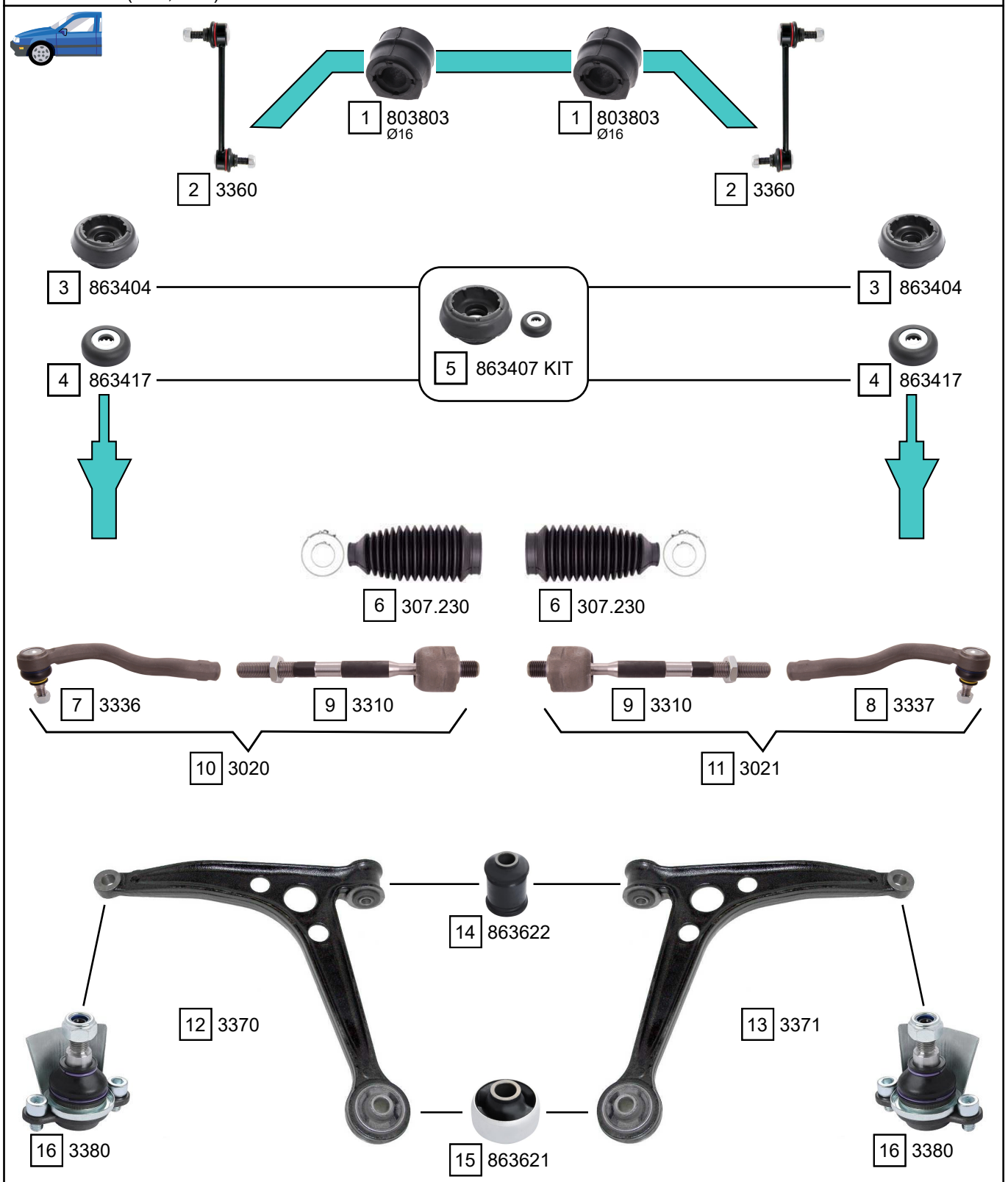

Ref.	Sidem Ref.	Description	OE-number	Measures	Ref.	Sidem Ref.	Description	OE-number	Measures
1	803803	stabiliser mounting	7M0 411 031	di:16	9	3310	axial joint	Part of	th:MM14X1.5R L:185
2	3360	stabiliser link	7M3 411 317 C	L:205	10	3020	tie rod left	7M3 422 803 A	c:14.3 L:421
3	863404	strut mount	7M0 412 331	di:26.5 do:96.7 L:50	11	3021	tie rod right	7M3 422 804 A	c:14.3 L:421
4	863417	bearing	1J0 412 249	di:14.3 do:45.3 L:13.4	12	3370	TCA left wobj	7M0 407 151 B	c:18
5	863407 KIT	strut mount kit	7M0 412 331 S1	di:14.3 do:98 L:50	13	3371	TCA right wobj	7M0 407 152 B	c:18
6	307.230	steering rack gaiter	7M3 422 831	D:49 d:10 L:180	14	863622	silentblock for TCA	7M0 501 541	di:14 do:35 (*)
7	3336	tie rod end left	7M3 422 817	c:14.3 th:FM14x1.5R	15	863621	silentblock for TCA	7M0 407 181	di:18 do:60.4 (*)
8	3337	tie rod end right	7M0 422 818	c:14.3 th:FM14x1.5R	16	3380	ball joint	7M3 407 365 C	c:18.6

Copyright 2021

SEAT
ALHAMBRA

ALHAMBRA (7V8, 7V9) 04/1996 - 03/2010

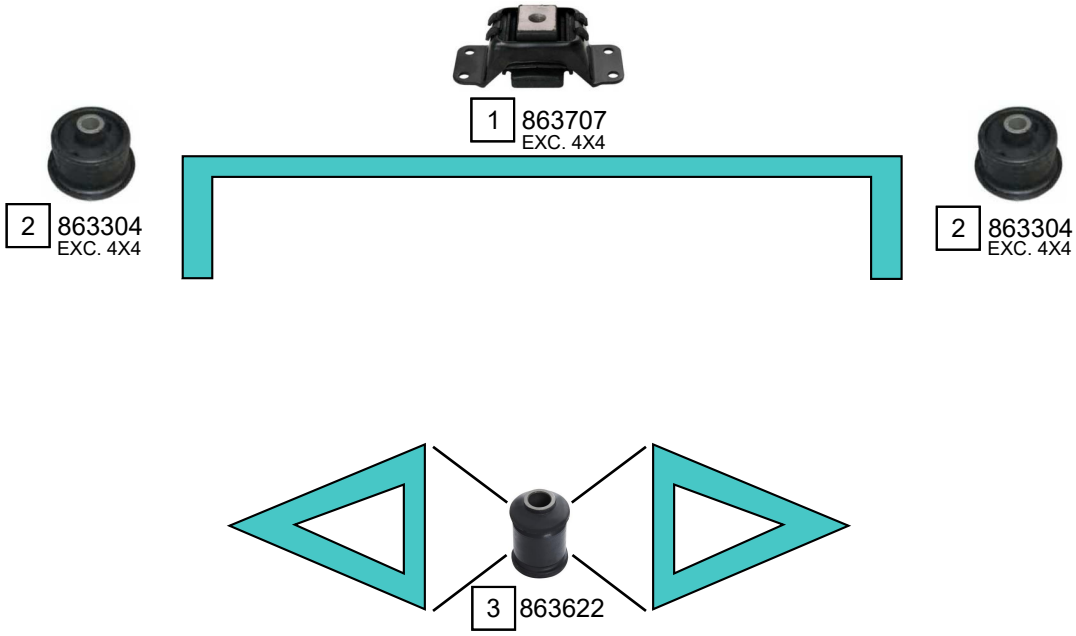

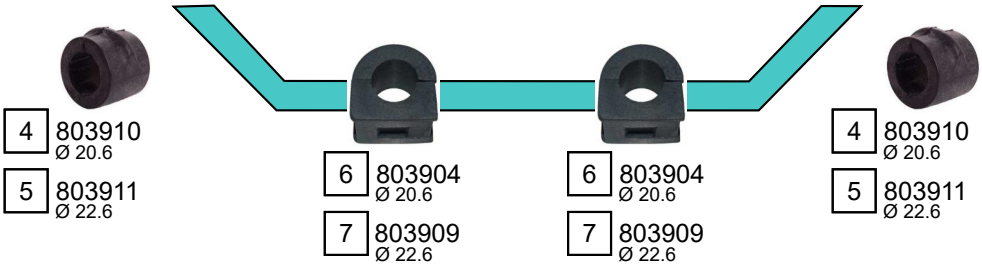

Ref.	Sidem Ref.	Description	OE-number	Measures	Ref.	Sidem Ref.	Description	OE-number	Measures
1	863707	mounting axle body	7M0 505 221 C	di:17	5	803911	stabiliser mounting	7M0 511 414 C	di:22.6
2	863304	mounting axle body	7M0 505 222 B	di:21.5 do:96	6	803904	stabiliser mounting	7M0 511 413 A	di:20.6
3	863622	silentblock for TCA	7M0 501 541	di:14 do:35 (*)	7	803909	stabiliser mounting	7M0 511 413 B	di:22.6
4	803910	stabiliser mounting	7M0 511 414 B	di:20.6					

Copyright 2021

ALHAMBRA (710, 711) 06/2010 ->

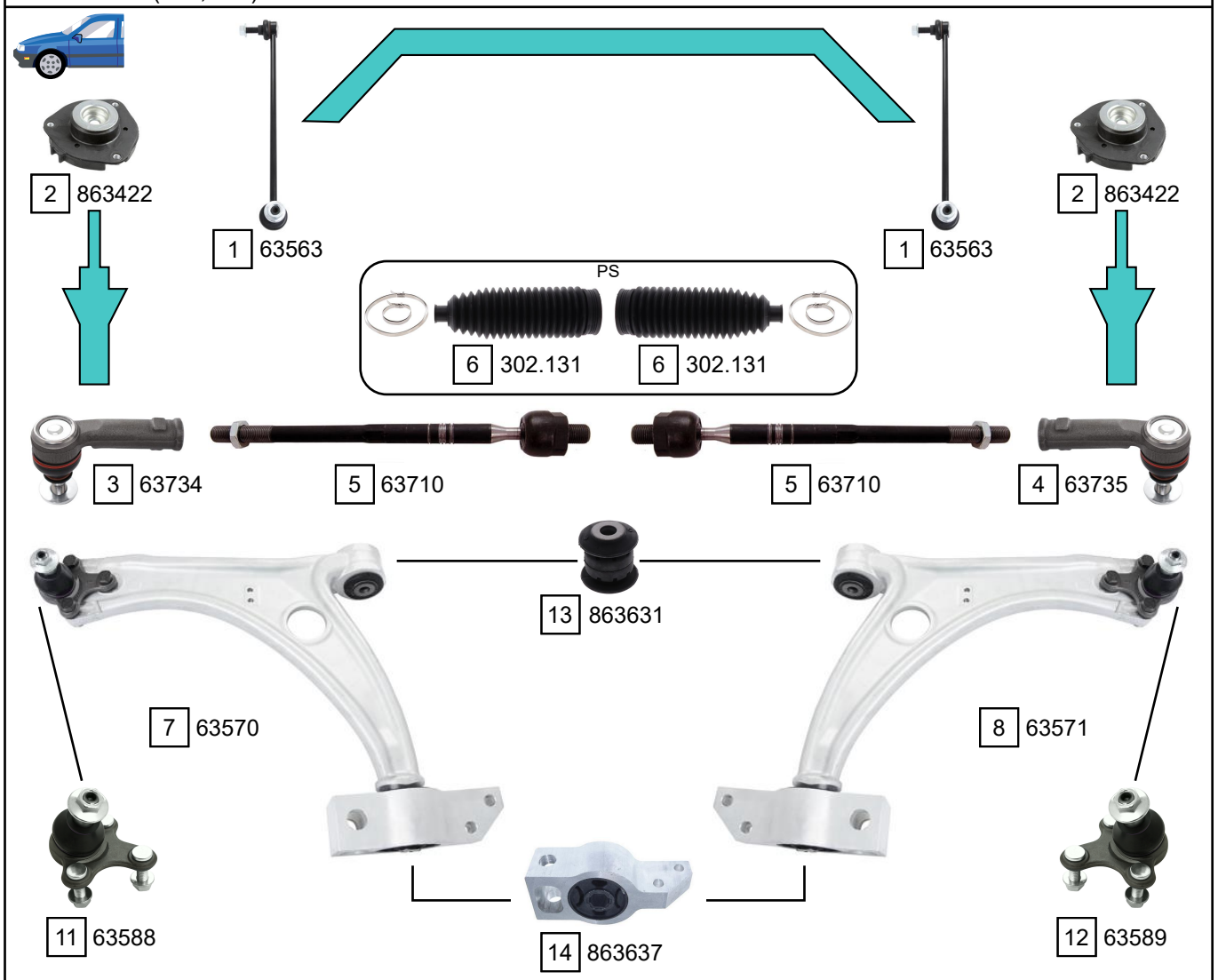

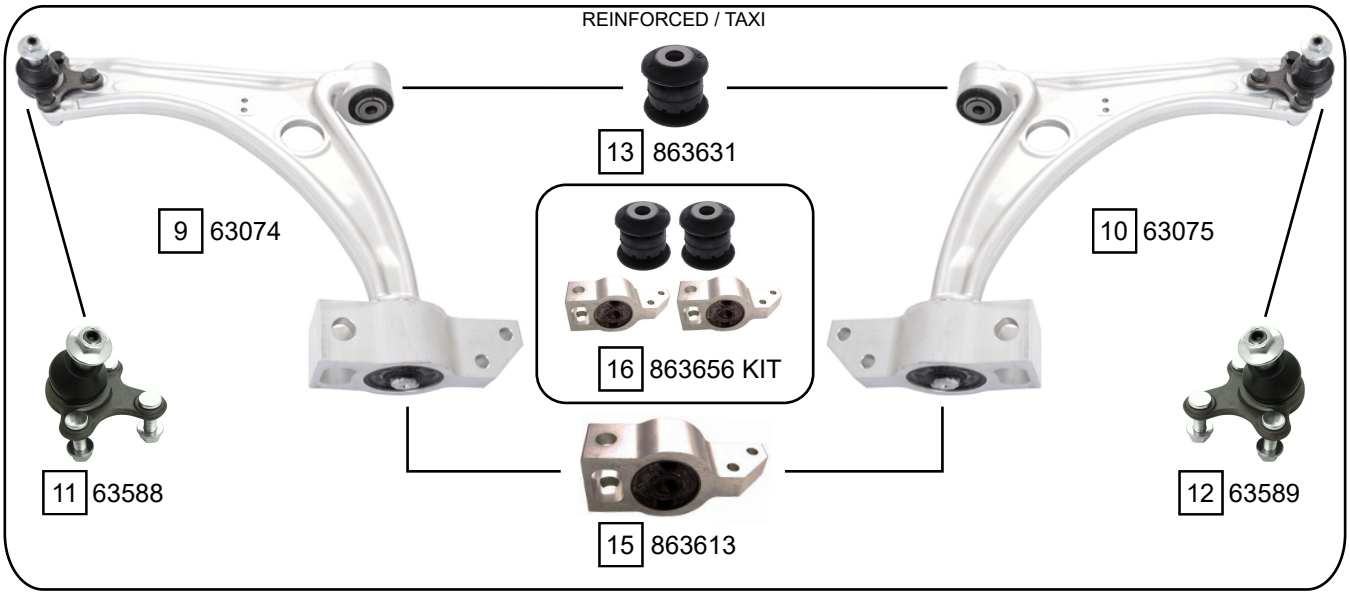

Ref.	Sidem Ref.	Description	OE-number	Measures	Ref.	Sidem Ref.	Description	OE-number	Measures
1	63563	stabiliser link	5Q0 411 315 A	L:335	9	63074	TCA left wbj	3C0 407 151 H S1	c:15.2
2	863422	strut mount	7N0 412 331	di:14.4 do:64.2 L:50	10	63075	TCA right wbj	3C0 407 151 H S2	c:15.2
3	63734	tie rod end left	1K0 423 811 J S2	c:13.2 th:FM16X1.5R	11	63588	ball joint left	3C0 407 365 B	c:15.2
4	63735	tie rod end right	1K0 423 812 J S2	c:13.2 th:FM16X1.5R	12	63589	ball joint right	3C0 407 366 B	c:15.2
5	63710	axial joint	1K0 423 810 A	th:MM16X1.5R L:312	13	863631	silentblock for TCA	1K0 407 182	di:12.1 do:40 (*)
6	302.131	steering rack gaiter	1K0 423 831 A	D:50 d:15 L:193	14	863637	silentblock for TCA	3C0 199 231 D	di:18.6 (*)
7	63570	TCA left wbj	3C0 407 151 G S1	c:15.2	15	863613	silentblock for TCA	3C0 199 231 F	di:18.6 do:62 (*)
8	63571	TCA right wbj	3C0 407 151 G S2	c:15.2	16	863656 KIT	silentblock kit	3C0 199 231 F S1	

Copyright 2021

SEAT
ALHAMBRA

ALHAMBRA (710, 711) 06/2010 ->

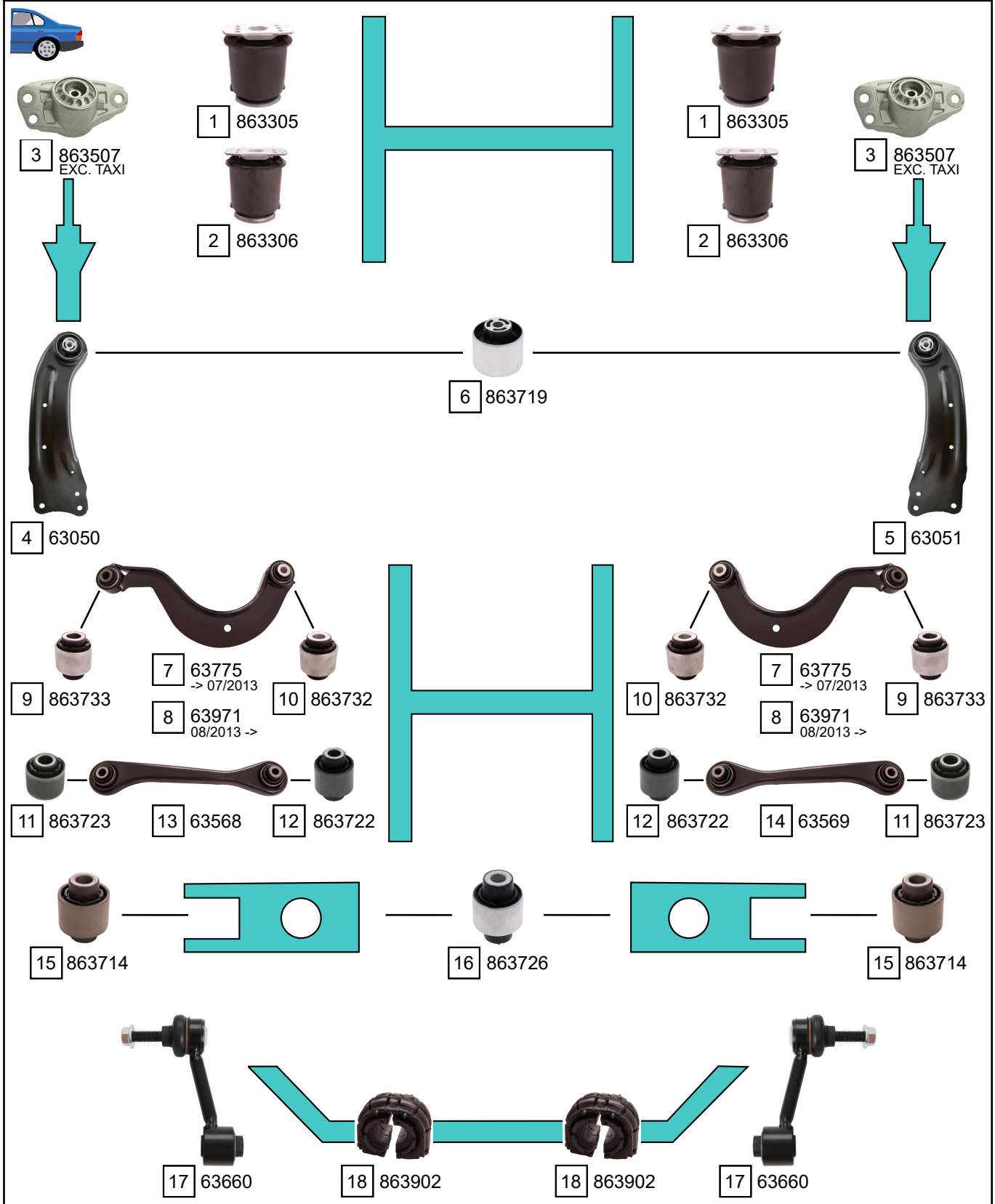

Ref.	Sidem Ref.	Description	OE-number	Measures	Ref.	Sidem Ref.	Description	OE-number	Measures
1	863305	mounting axle body	1K0 505 145 J	di:18 do:70	10	863732	silentblock for TCA	Part of	di:12.1 do:38.3 (*)
2	863306	mounting axle body	1K0 505 145 K	di:18 do:70	11	863723	silentblock for TCA	Part of	di:14.2 do:40.1 (*)
3	863507	strut mount	3C0 513 353 C	di:10.5 do:68 L:62.7	12	863722	silentblock for TCA	Part of	di:12.1 do:40.4 (*)
4	63050	TCA left	3C0 505 223 E	L:376.5	13	63568	track rod	1K0 501 529 F	L:298
5	63051	TCA right	3C0 505 224 E	L:376.5	14	63569	track rod	1K0 501 530 C	L:298
6	863719	mounting axle body	3C0 505 541	di:12.2 do:60.2 (*)	15	863714	silentblock for TCA	1K0 505 553 A	di:12.2 do:37.4 (*)
7	63775	track rod	1K0 505 323 N	L:305.5	16	863726	silentblock for TCA	Part of	di:12.1 do:42 (*)
8	63971	track rod	5Q0 505 323 C	L:305	17	63660	stabiliser link rear axle	1K0 505 465 K	L:95
9	863733	silentblock for TCA	Part of	di:14.3 do:38.2 (*)	18	863902	stabiliser mounting	1K0 511 327 AQ	di:19

Copyright 2021

ALTEA (5P1) 03/2004 - 09/2015
ALTEA XL (5P5) 10/2006 - 09/2015

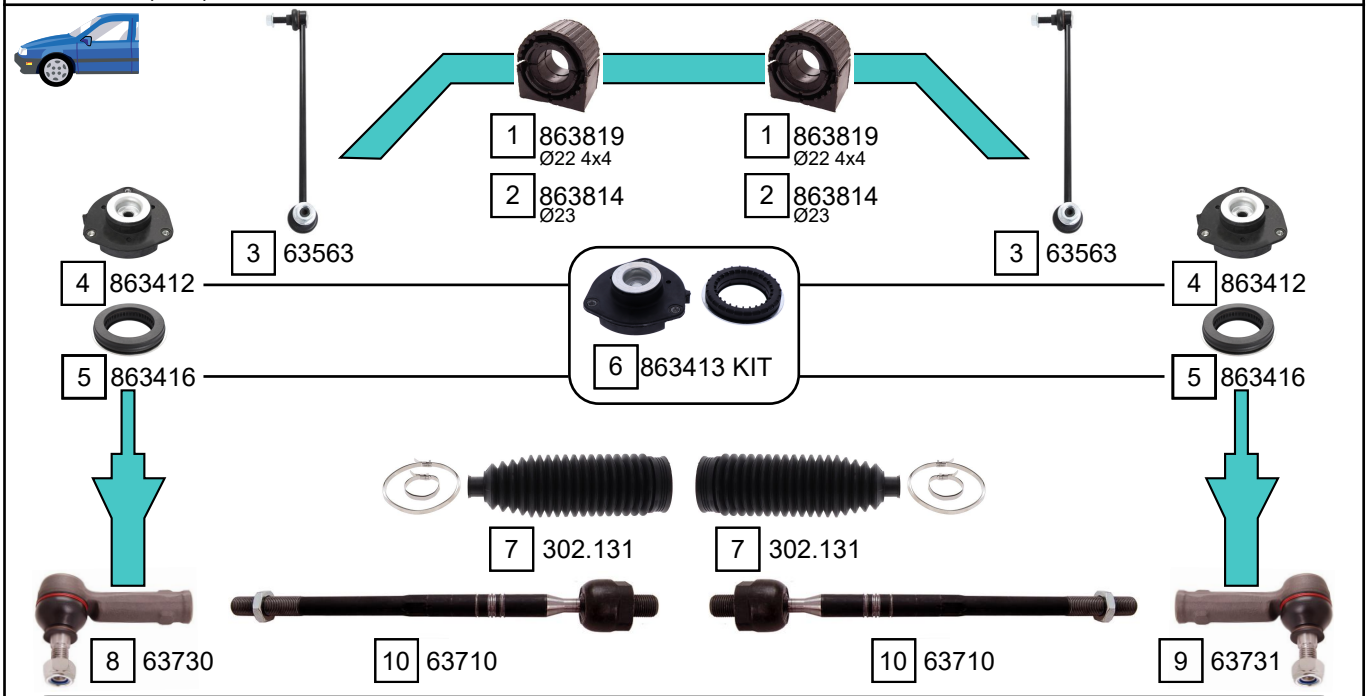

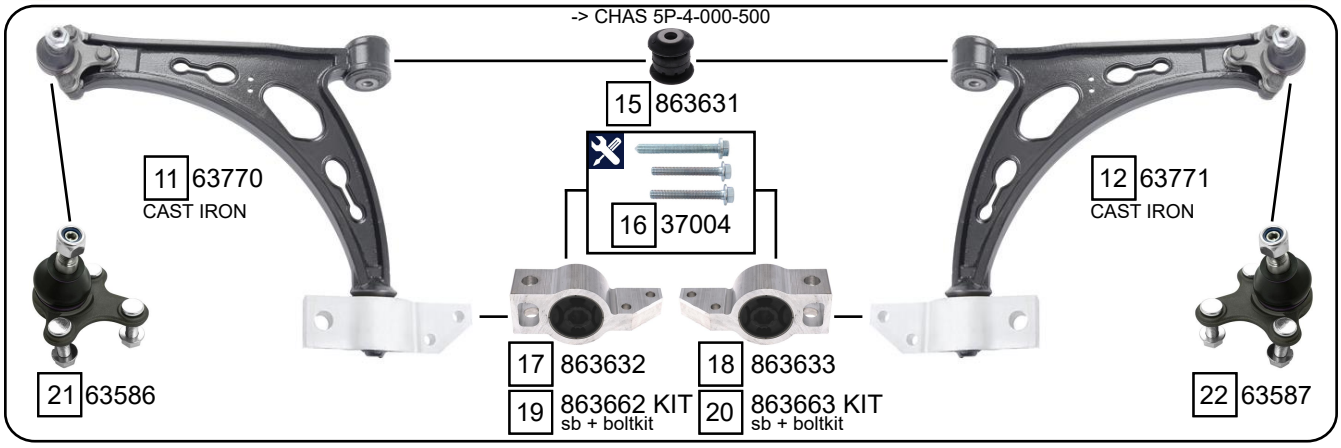

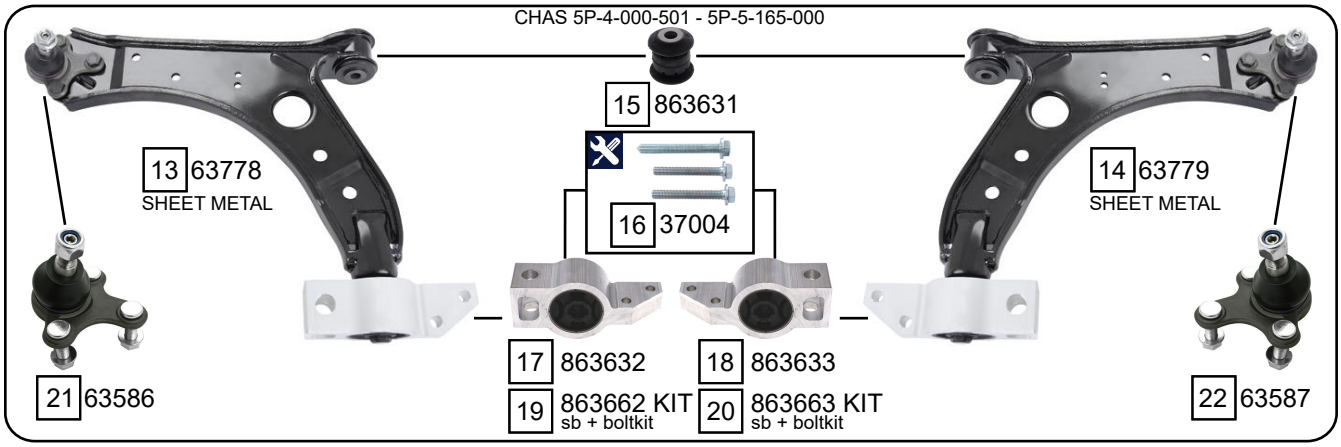

Ref.	Sidem Ref.	description	OE-number	measures	Ref.	Sidem Ref.	description	OE-number	measures
1	863819	stabiliser mounting	Part of	di:20	12	63771	TCA right wbj	1K0 407 152 AC	c:15.4
2	863814	stabiliser mounting	Part of	di:21	13	63778	TCA left wbj	1K0 407 151 AA S1	c:15.4
3	63563	stabiliser link	5Q0 411 315 A	L:335	14	63779	TCA right wbj	1K0 407 152 AA S2	c:15.4
4	863412	strut mount	1K0 412 331 B	di:14.2 L:49.5	15	863631	silentblock for TCA	1K0 407 182	di:12.1 do:40 (*)
5	863416	bearing	1K0 412 249 B	di:68.5 do:112 L:25.5	16	37004	mounting kit	N 910 398 02 S1	th:M10x1.5R
6	863413 KIT	strut mount kit	1K0 412 331 B S1	di:14.2 L:50	17	863632	silentblock for TCA	1K0 199 231 J	di:18.8 (*)
7	302.131	steering rack gaiter	1K0 423 831 A	D:50 d:15 L:193	18	863633	silentblock for TCA	1K0 199 232 J	di:18.8 (*)
8	63730	tie rod end left	1K0 423 811 J S1	c:13.2 th:FM16x1.5R	19	863662 KIT	silentblock kit	1K0 199 231 J S1	
9	63731	tie rod end right	1K0 423 812 J S1	c:13.2 th:FM16x1.5R	20	863663 KIT	silentblock kit	1K0 199 232 J S1	
10	63710	axial joint	1K0 423 810 A	th:MM16X1.5R L:312	21	63586	ball joint left	1K0 407 365 C	c:15.4
11	63770	TCA left wbj	1K0 407 151 AC	c:15.4	22	63587	ball joint right	1K0 407 366 C	c:15.4

Copyright 2021

SEAT
ALTEA

ALTEA (5P1) 03/2004 - 09/2015
ALTEA XL (5P5) 10/2006 - 09/2015

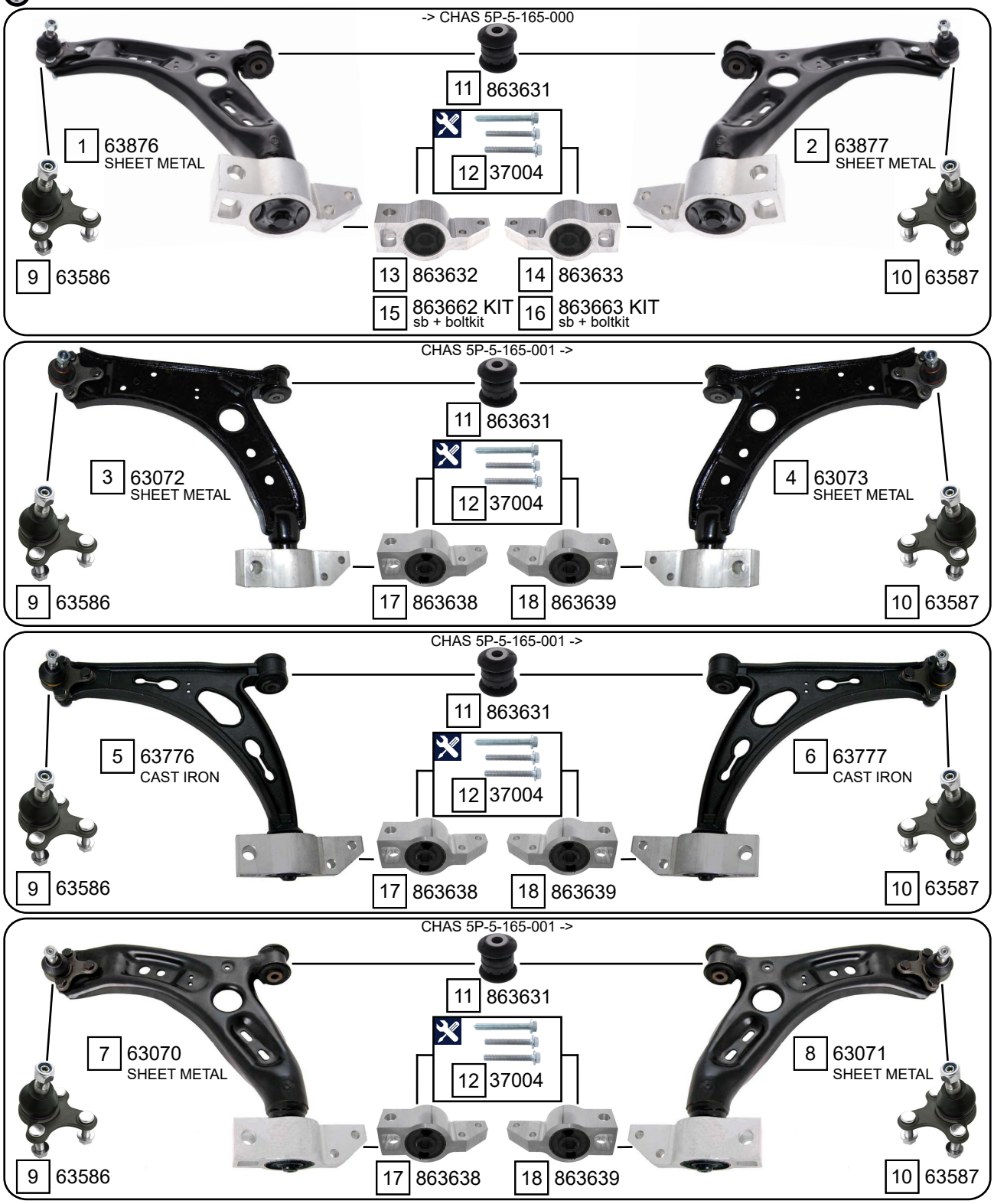

Ref.	Sidem Ref.	Description	OE-number	Measures	Ref.	Sidem Ref.	Description	OE-number	Measures
1	63876	TCA left wbj	1K0 407 151 BC S1	c:15.4	10	63587	ball joint right	1K0 407 366 C	c:15.4
2	63877	TCA right wbj	1K0 407 152 BC S2	c:15.4	11	863631	silentblock for TCA	1K0 407 182	di:12.1 do:40 (*)
3	63072	TCA left wbj	1K0 407 151 AB	c:15.4	12	37004	mounting kit	N 910 398 02 S1	th:M10x1.5R
4	63073	TCA right wbj	1K0 407 152 AB	c:15.4	13	863632	silentblock for TCA	1K0 199 231 J	di:18.8 (*)
5	63776	TCA left wbj	1K0 407 151 AK	c:15.4	14	863633	silentblock for TCA	1K0 199 232 J	di:18.8 (*)
6	63777	TCA right wbj	1K0 407 152 AD	c:15.4	15	863662 KIT	silentblock kit	1K0 199 231 J S1	
7	63070	TCA left wbj	1K0 407 151 BD S1	c:15.4	16	863663 KIT	silentblock kit	1K0 199 232 J S1	
8	63071	TCA right wbj	1K0 407 152 BD S1	c:15.4	17	863638	silentblock for TCA	1K0 199 231 K	di:18.6 (*)
9	63586	ball joint left	1K0 407 365 C	c:15.4	18	863639	silentblock for TCA	1K0 199 232 K	di:18.6 (*)

Copyright 2021

ALTEA (5P1) 03/2004 - 09/2015
ALTEA XL (5P5) 10/2006 - 09/2015

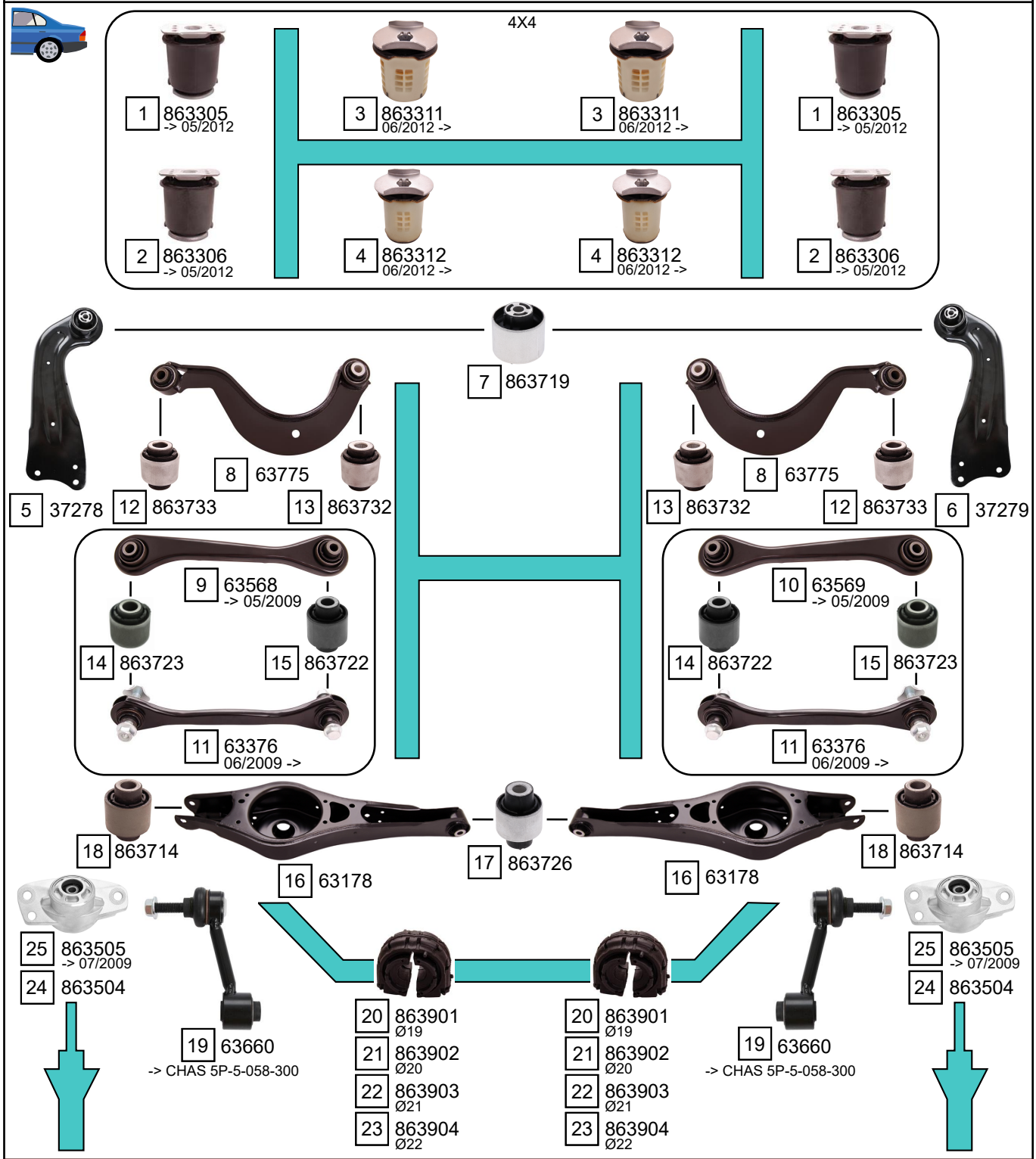

Ref.	Sidem Ref.	description	OE-number	measures	Ref.	Sidem Ref.	description	OE-number	measures
1	863305	mounting axle body	1K0 505 145 J	di:18 do:70	14	863723	silentblock for TCA	Part of	di:14.2 do:40.1 (*)
2	863306	mounting axle body	1K0 505 145 K	di:18 do:70	15	863722	silentblock for TCA	Part of	di:12.1 do:40.4 (*)
3	863311	mounting axle body	5Q0 505 145 F	di:18.2 do:61.5	16	63178	TCA	1K0 505 311 AB	
4	863312	mounting axle body	5Q0 505 145 E	di:18.6 do:53.5	17	863726	silentblock for TCA	Part of	di:12.1 do:42 (*)
5	37278	TCA left	1K0 505 223 K	L:373	18	863714	silentblock for TCA	1K0 505 553 A	di:12.2 do:37.4 (*)
6	37279	TCA right	1K0 505 224 K	L:373	19	63660	stabiliser link rear axle	1K0 505 465 K	L:95
7	863719	mounting axle body	3C0 505 541	di:12.2 do:60.2 (*)	20	863901	stabiliser mounting	1K0 511 327 AP	di:17
8	63775	track rod	1K0 505 323 N	L:305.5	21	863902	stabiliser mounting	1K0 511 327 AQ	di:19
9	63568	track rod	1K0 501 529 F	L:298	22	863903	stabiliser mounting	1K0 511 327 AR	di:18.5
10	63569	track rod	1K0 501 530 C	L:298	23	863904	stabiliser mounting	1K0 511 327 AS	di:19.5
11	63376	track rod	1K0 501 529 H	L:298	24	863504	strut mount	1K0 513 353 G	di:10.5 do:63 L:62
12	863733	silentblock for TCA	Part of	di:14.3 do:38.2 (*)	25	863505	strut mount	1K0 513 353 H	di:10.4 L:62
13	863732	silentblock for TCA	Part of	di:12.1 do:38.3 (*)					

Copyright 2021

SEAT
ARONA

ARONA (KJ7) 07/2017 ->

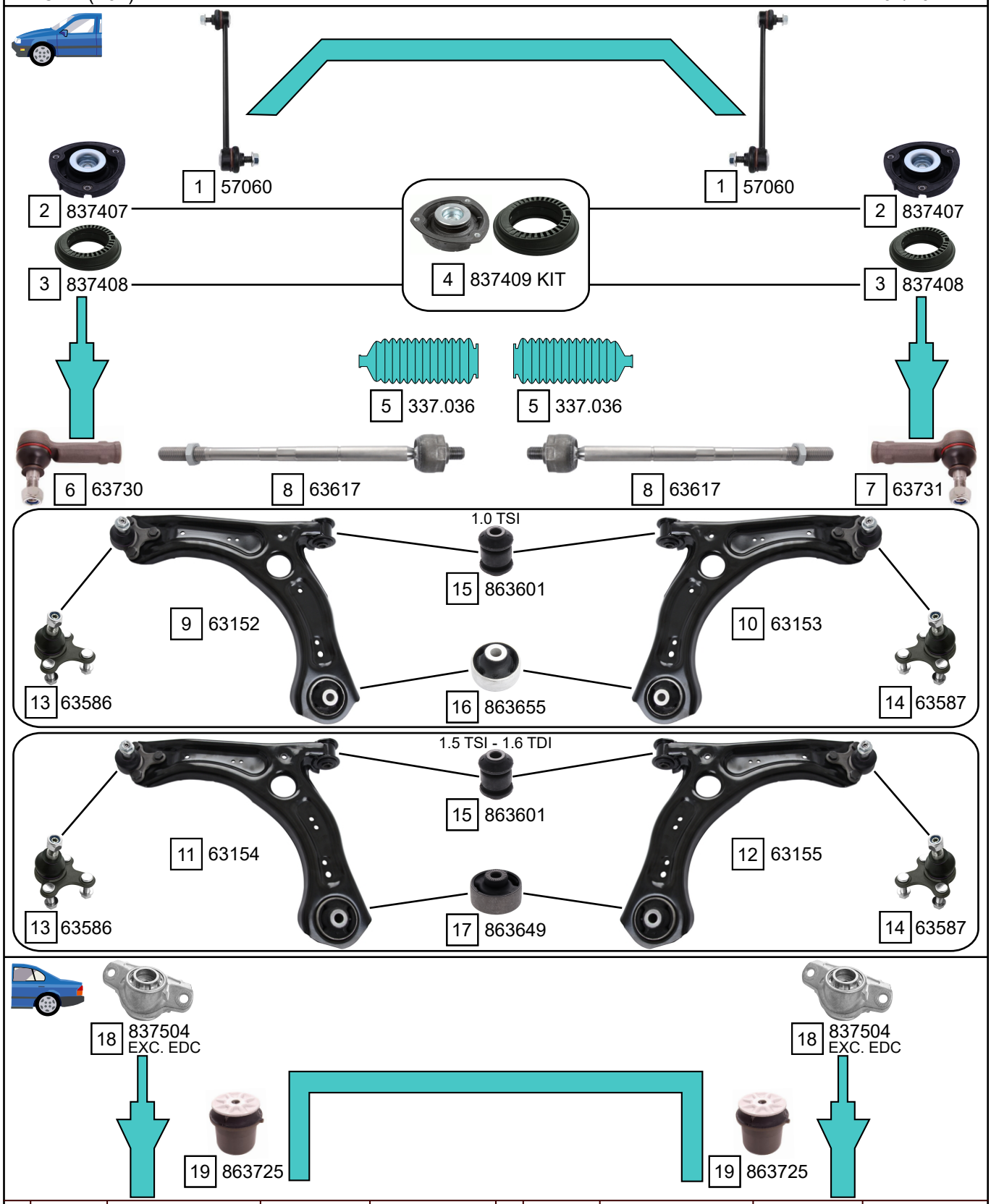

Ref.	Sidem Ref.	Description	OE-number	Measures	Ref.	Sidem Ref.	Description	OE-number	Measures
1	57060	stabiliser link	6R0 411 315	L:270	11	63154	TCA left wbj	2Q0 407 151 C S1	c:15.4
2	837407	strut mount	5Q0 412 331 E	di:14.6 do:64.1 L:42	12	63155	TCA right wbj	2Q0 407 152 C S1	c:15.4
3	837408	bearing	5Q0 412 249 F	di:74 do:127 L:38.6	13	63586	ball joint left	1K0 407 365 C	c:15.4
4	837409 KIT	strut mount kit	5Q0 412 331 E S1	di:14.6 do:127	14	63587	ball joint right	1K0 407 366 C	c:15.4
5	337.036	steering rack gaiter	2Q0 423 831	D:54.5 d:14.5 L:192	15	863601	silentblock for TCA	357 407 182	di:12 do:32.6 (*)
6	63730	tie rod end left	1K0 423 811 J S1	c:13.2 th:FM16x1.5R	16	863655	silentblock for TCA	2Q0 407 183 B	di:12.9 do:60.5 (*)
7	63731	tie rod end right	1K0 423 812 J S1	c:13.2 th:FM16x1.5R	17	863649	silentblock for TCA	5Q0 407 183 E	di:12.9 do:65 (*)
8	63617	axial joint	2Q0 423 810 D	th:MM14X1.5R L:315	18	837504	strut mount	5Q0 513 353 H	di:11.2 do:56.5 L:60.7
9	63152	TCA left wbj	2Q0 407 151 D S1	c:15.4	19	863725	mounting axle body	5Q0 501 541 C	di:12.5 do:72
10	63153	TCA right wbj	2Q0 407 152 D S1	c:15.4					

Copyright 2021

AROSA (6H) 05/1997 - 02/2005

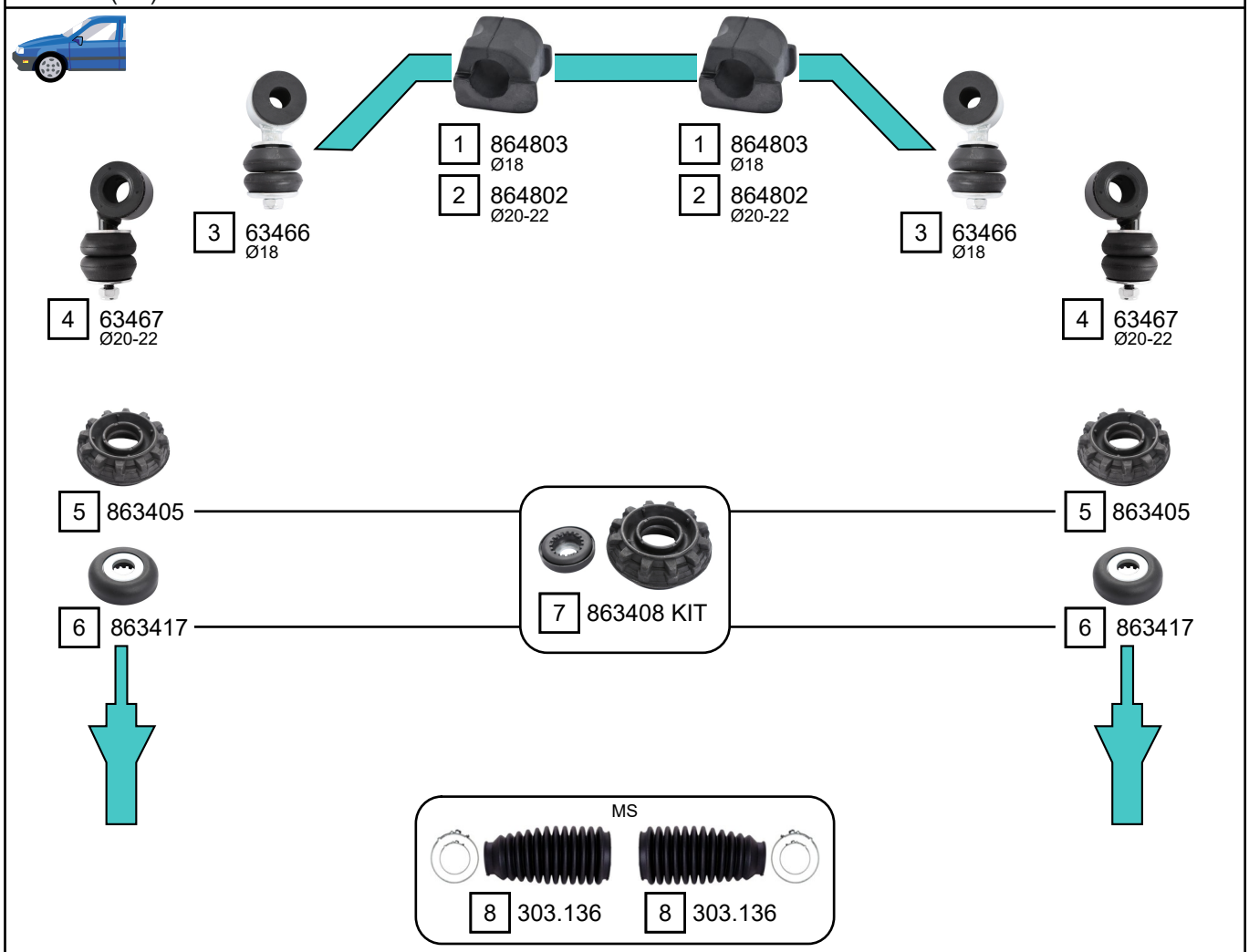

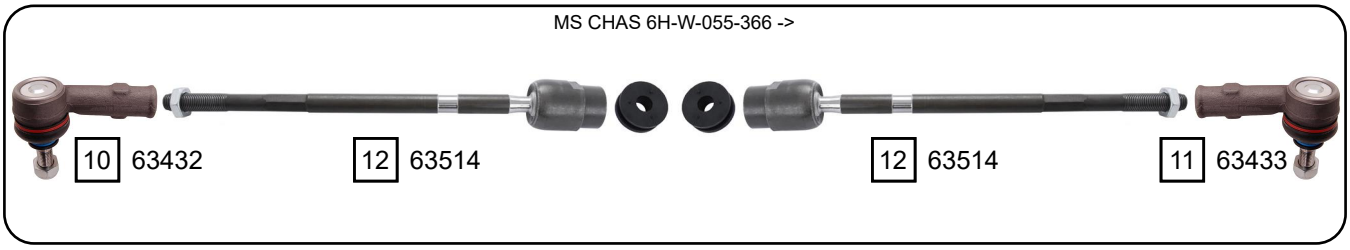

Ref.	Sidem Ref.	Description	OE-number	Measures	Ref.	Sidem Ref.	Description	OE-number	Measures
1	864803	stabiliser mounting	6X0 411 313	di:18	7	863408 KIT	strut mount kit	6N0 412 331 A S1	di:14.3 do:83 L:36
2	864802	stabiliser mounting	6X0 411 313 A	di:18	8	303.136	steering rack gaiter	6N0 419 831	D:40 d:25 L:143
3	63466	stabiliser link	6N0 411 315 C	L:72	9	63510	axial joint	Part of	th:FM22x1.5R L:320
4	63467	stabiliser link	6N0 411 315 D S1	L:73	10	63432	tie rod end left	6N0 419 811	c:12.6 th:FM14x1.5R
5	863405	strut mount	6N0 412 331 A	di:27 do:82.5 L:34	11	63433	tie rod end right	6N0 422 812	c:12.6 th:FM14x1.5R
6	863417	bearing	1J0 412 249	di:14.3 do:45.3 L:13.4	12	63514	axial joint	Part of	th:FM22X1.5R L:332

Copyright 2021

SEAT
AROSA

SIDEM
Experts know why

AROSA (6H) 05/1997 - 02/2005

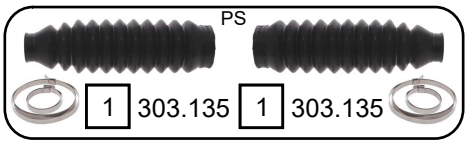

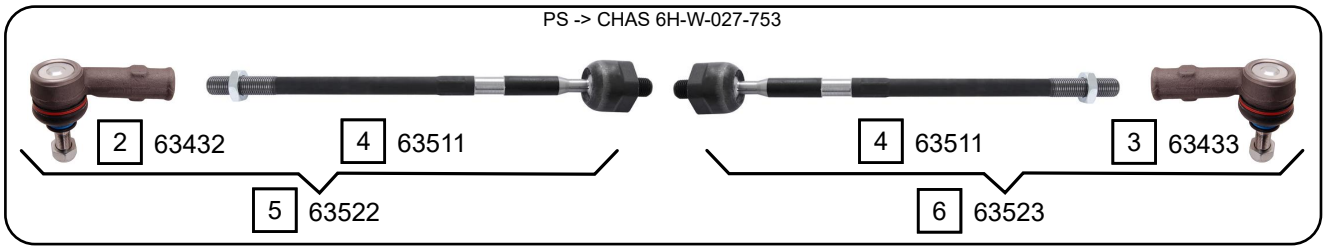

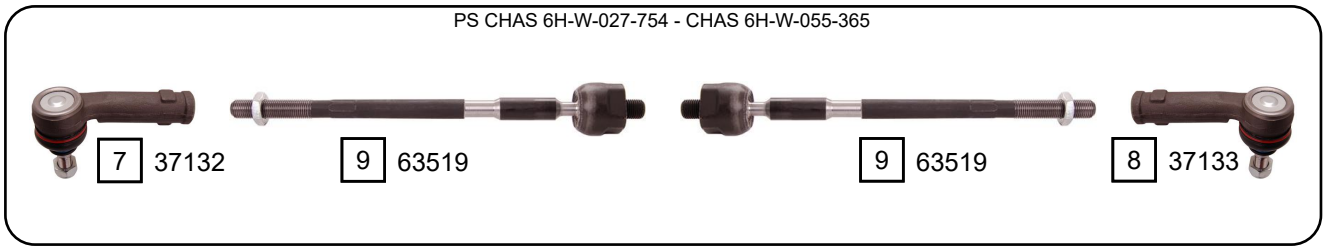

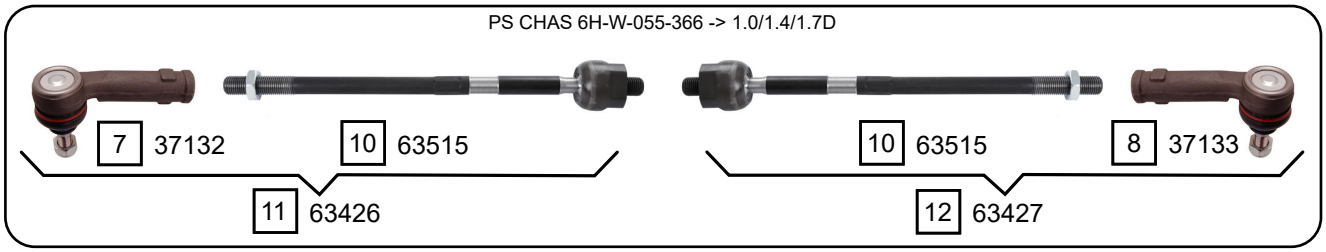

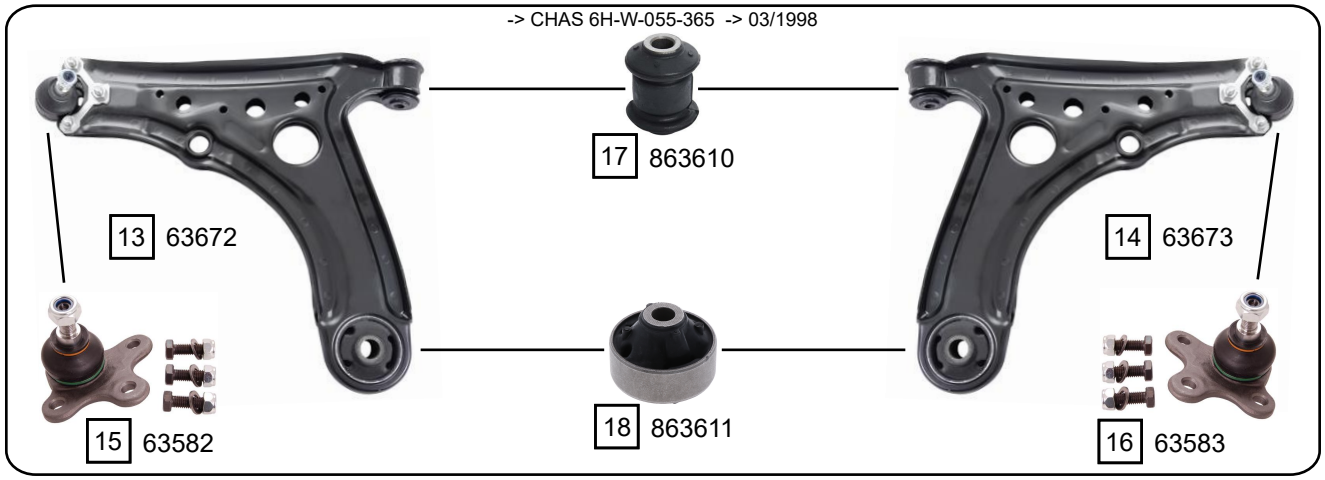

Ref.	Sidem Ref.	Description	OE-number	Measures	Ref.	Sidem Ref.	Description	OE-number	Measures
1	303.135	steering rack gaiter	6N0 422 831	D:42 d:11 L:208	10	63515	axial joint	Part of	th:MM14X1.5R L:292
2	63432	tie rod end left	6N0 419 811	c:12.6 th:FM14x1.5R	11	63426	tie rod left	6N0 422 803 C	c:12.7
3	63433	tie rod end right	6N0 422 812	c:12.6 th:FM14x1.5R	12	63427	tie rod right	6N0 422 804 C	c:12.7
4	63511	axial joint	Part of	th:MM14X1.5R L:308	13	63672	TCA left wbj	6N0 407 151 B S1	c:15
5	63522	tie rod left	6N0 422 803 A	c:12.6	14	63673	TCA right wbj	6N0 407 151 B S2	c:14.5
6	63523	tie rod right	6N0 422 804 A	c:12.6	15	63582	ball joint left	6N0 407 365	c:14.7
7	37132	tie rod end	6X0 422 811	c:12.7 th:FM14X1.5R	16	63583	ball joint right	6N0 407 365 A	c:14.7
8	37133	tie rod end	6X0 422 812	c:12.7 th:FM14X1.5R	17	863610	silentblock for TCA	Part of	di:10.1 do:27.4 (*)
9	63519	axial joint	Part of	th:MM14x1.5R L:284	18	863611	silentblock for TCA	6N0 407 181	di:17.1 do:60.2 (*)

Copyright 2021

AROSA (6H) 05/1997 - 02/2005

CHAS 6H-W-055-366 -> 04/1998 ->
EXC. 1.4 AFK, AQQ, AUB, AMF

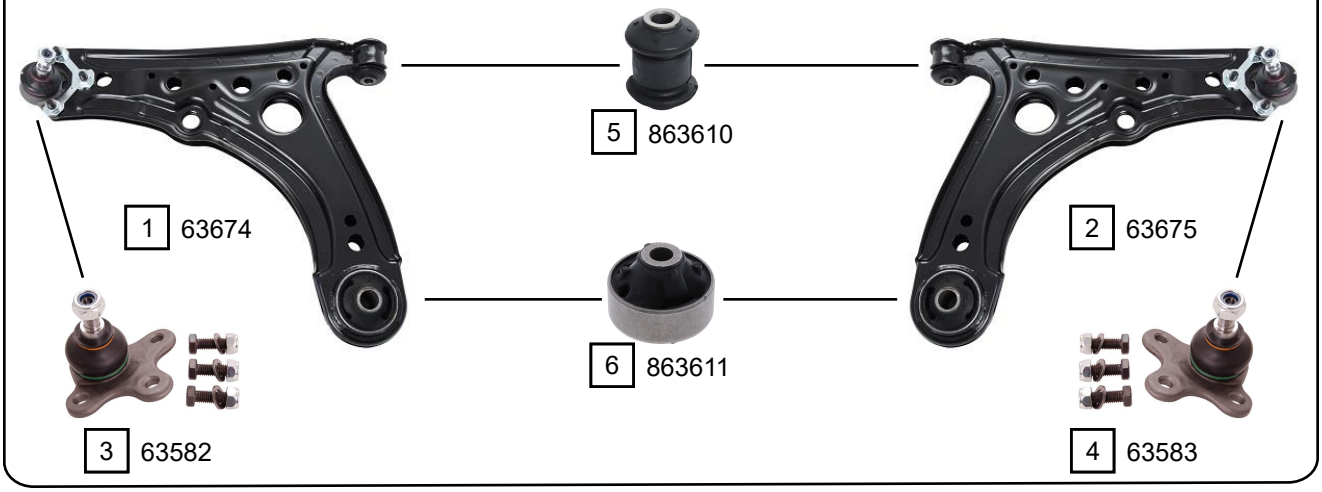

CHAS 6H-W-055-366 -> 04/1998 ->
1.4 AFK, AQQ, AUB, AMF

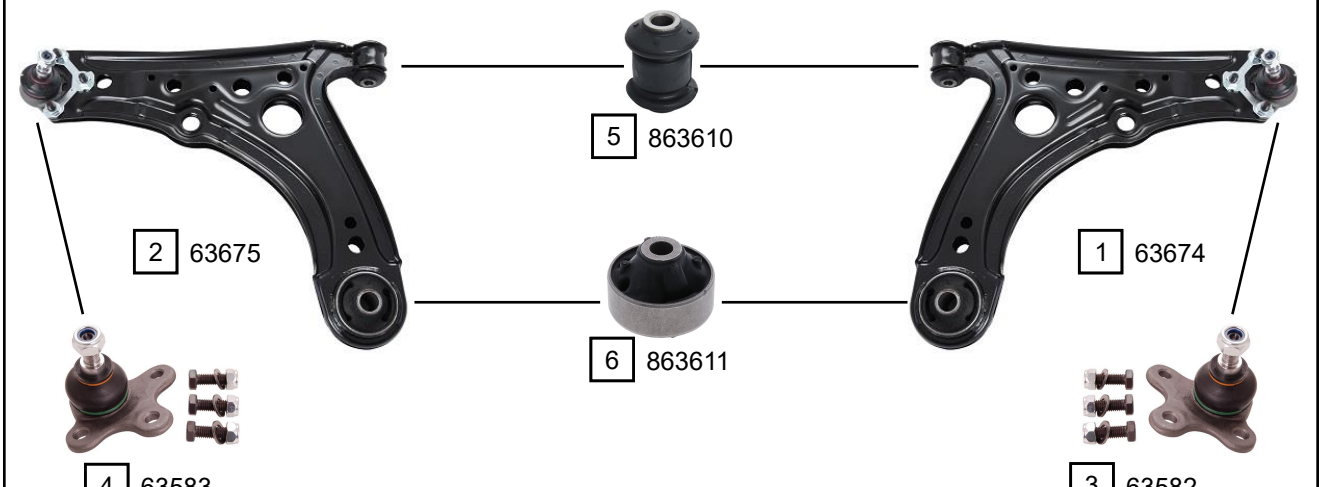

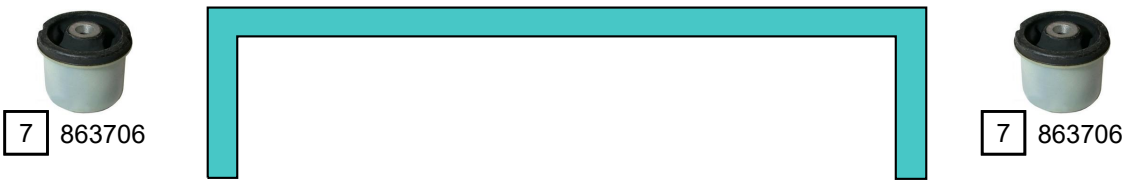

Ref.	Sidem Ref.	Description	OE-number	Measures	Ref.	Sidem Ref.	Description	OE-number	Measures
1	63674	TCA left wbj	6X0 407 151 A S1	c:14.5	5	863610	silentblock for TCA	Part of	di:10.1 do:27.4 (*)
2	63675	TCA right wbj	6X0 407 151 A S2	c:14.6	6	863611	silentblock for TCA	6N0 407 181	di:17.1 do:60.2 (*)
3	63582	ball joint left	6N0 407 365	c:14.7	7	863706	mounting axle body	6N0 501 541 D	di:10.1 do:58
4	63583	ball joint right	6N0 407 365 A	c:14.7					

Copyright 2021

SEAT
ATECA

ATECA (KH7) 04/2016 ->

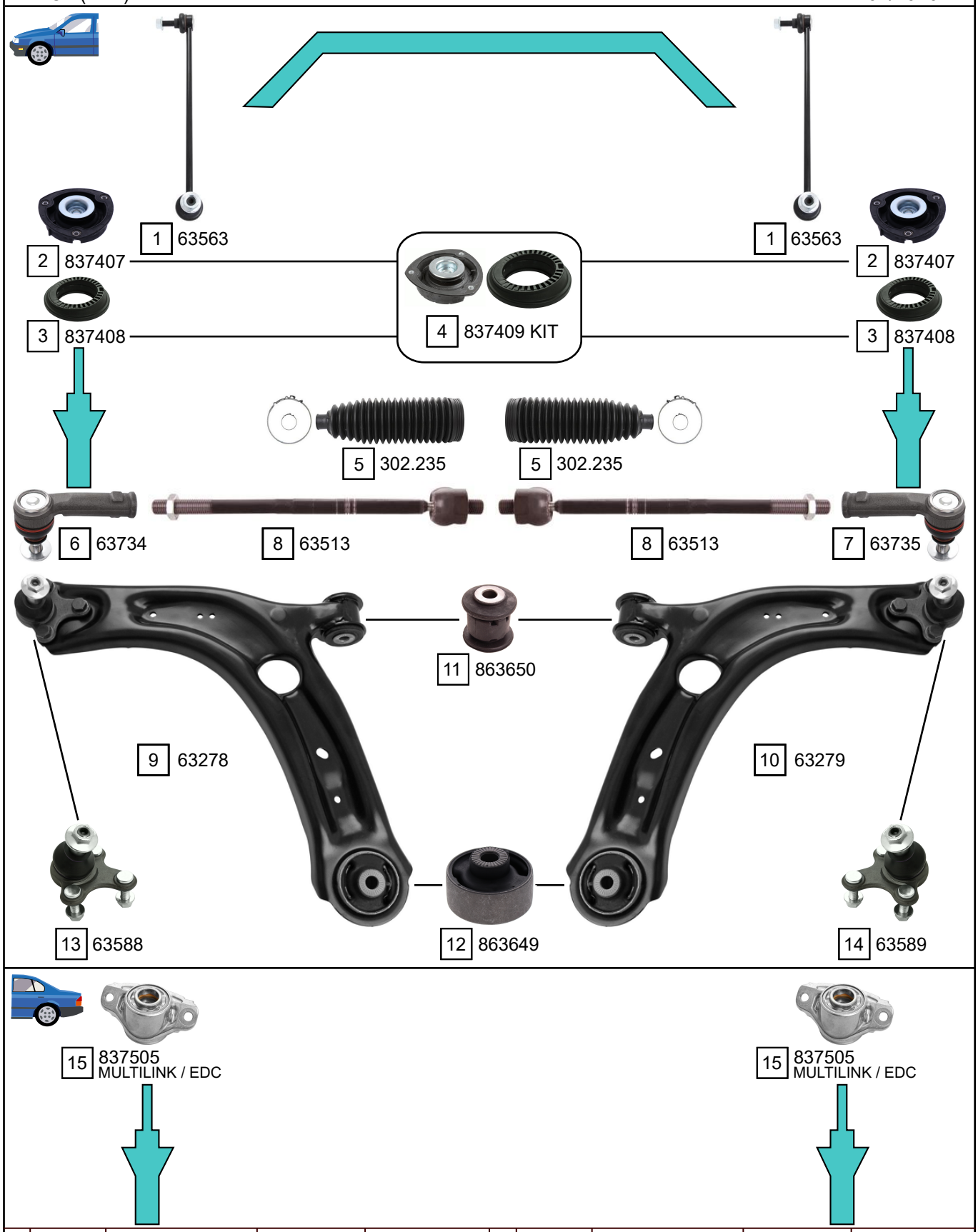

Ref.	Sidem Ref.	Description	OE-number	Measures	Ref.	Sidem Ref.	Description	OE-number	Measures
1	63563	stabiliser link	5Q0 411 315 A	L:335	9	63278	TCA left wbj	3Q0 407 151 E S1	c:15.2
2	837407	strut mount	5Q0 412 331 E	di:14.6 do:64.1 L:42	10	63279	TCA right wbj	3Q0 407 152 E S1	c:15.2
3	837408	bearing	5Q0 412 249 F	di:74 do:127 L:38.6	11	863650	silentblock for TCA	5Q0 407 182 A	di:12.1 do:40.1 (*)
4	837409 KIT	strut mount kit	5Q0 412 331 E S1	di:14.6 do:127	12	863649	silentblock for TCA	5Q0 407 183 E	di:12.9 do:65 (*)
5	302.235	steering rack gaiter	5Q0 423 831	D:53.5 d:15.5 L:191	13	63588	ball joint left	3C0 407 365 B	c:15.2
6	63734	tie rod end left	1K0 423 811 J S2	c:13.2 th:FM16X1.5R	14	63589	ball joint right	3C0 407 366 B	c:15.2
7	63735	tie rod end right	1K0 423 812 J S2	c:13.2 th:FM16X1.5R	15	837505	strut mount	5Q0 513 353 G	di:10.2 do:65.8 L:63.3
8	63513	axial joint	561 423 810	th:MM16X1.5R L:330					

Copyright 2021

ATECA (KH7) 04/2016 ->

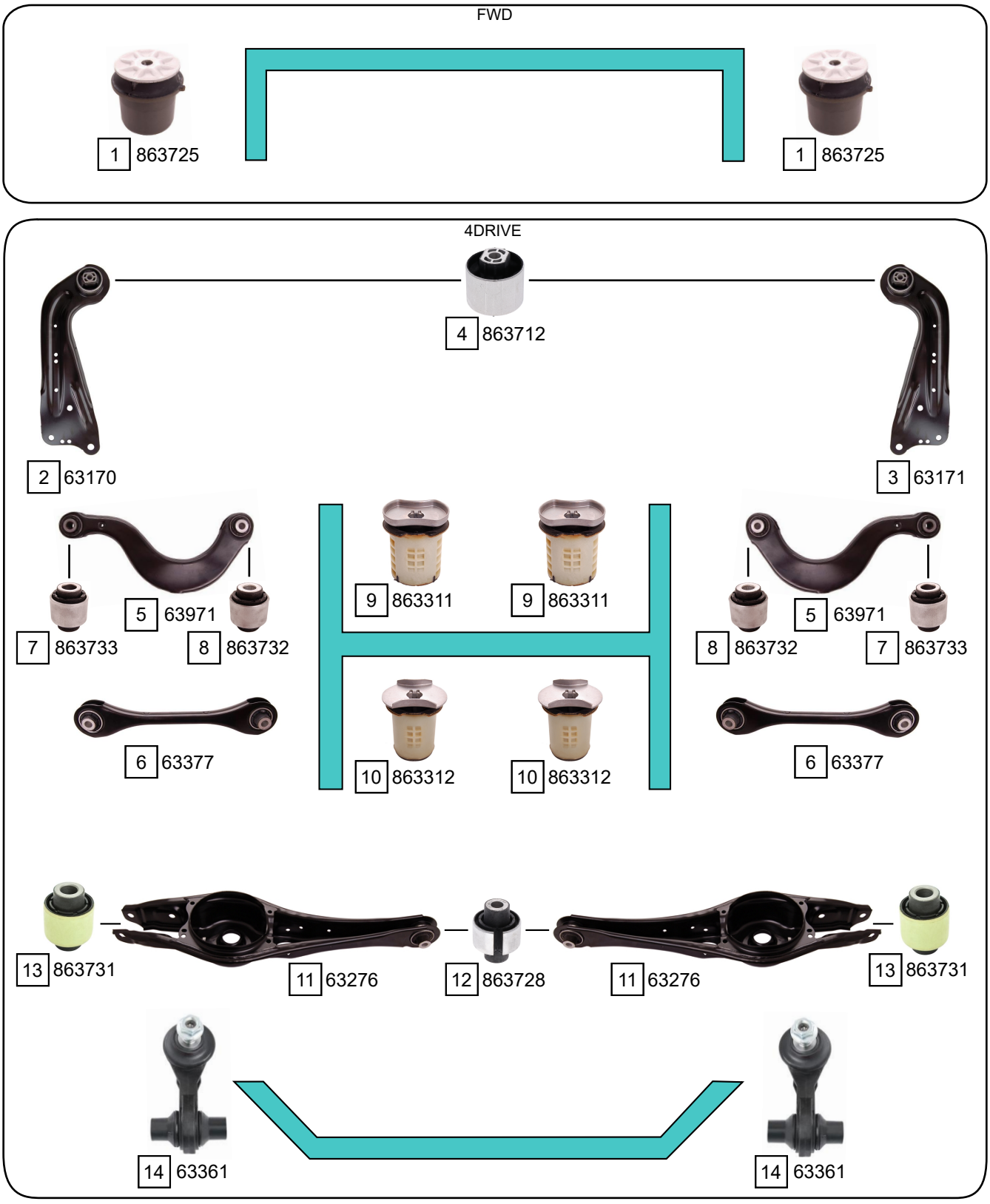

Ref.	Sidem Ref.	Description	OE-number	Measures	Ref.	Sidem Ref.	Description	OE-number	Measures
1	863725	mounting axle body	5Q0 501 541 C	di:12.5 do:72	8	863732	silentblock for TCA	Part of	di:12.1 do:38.3 (*)
2	63170	TCA left	5Q0 505 223 D	L:384	9	863311	mounting axle body	5Q0 505 145 F	di:18.2 do:61.5
3	63171	TCA right	5Q0 505 224 D	L:384	10	863312	mounting axle body	5Q0 505 145 E	di:18.6 do:53.5
4	863712	silentblock for TCA	1K0 505 541 B	di:12.2 do:60.2 (*)	11	63276	TCA	5Q0 505 311 D	
5	63971	track rod	5Q0 505 323 C	L:305	12	863728	silentblock for TCA	Part of	di:12 do:44.3 (*)
6	63377	track rod	5Q0 501 529 F	L:282	13	863731	silentblock for TCA	5Q0 505 553	di:12.1 do:37.4 (*)
7	863733	silentblock for TCA	Part of	di:14.3 do:38.2 (*)	14	63361	stabiliser link rear axle	5Q0 505 465 A	L:70

Copyright 2021

SEAT
CORDOBA

CORDOBA (6K1, 6K2) 02/1993 - 10/2002
CORDOBA VARIO (6K5) 06/1999 - 12/2002

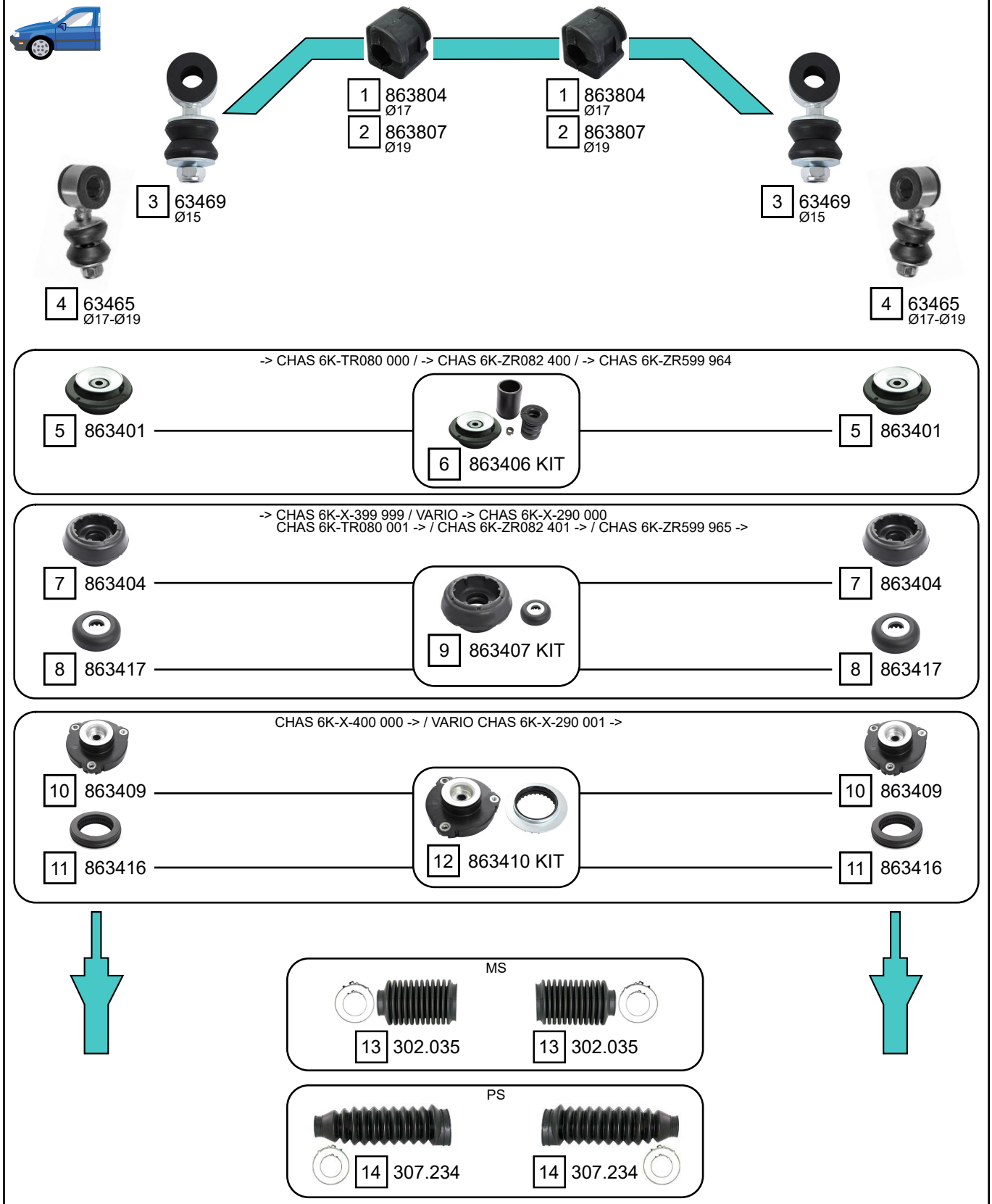

Ref.	Sidem Ref.	Description	OE-number	Measures	Ref.	Sidem Ref.	Description	OE-number	Measures
1	863804	stabiliser mounting	191 411 314	di:17	8	863417	bearing	1J0 412 249	di:14.3 do:45.3 L:13.4
2	863807	stabiliser mounting	1H0 411 314	di:19	9	863407 KIT	strut mount kit	7M0 412 331 S1	di:14.3 do:98 L:50
3	63469	stabiliser link	191 411 315 B	L:76	10	863409	strut mount	6N0 412 331 E	di:14.3 do:66 L:49
4	63465	stabiliser link	6K0 411 315	L:78	11	863416	bearing	1K0 412 249 B	di:68.5 do:112 L:25.5
5	863401	strut mount	191 412 329	di:14.5 do:89.3 L:52	12	863410 KIT	strut mount kit	6N0 412 331 E S2	di:14.3
6	863406 KIT	strut mount kit	191 412 329 S1	di:14.5 do:127 L:53	13	302.035	steering rack gaiter	191 419 831	D:41 d:25 L:120
7	863404	strut mount	7M0 412 331	di:26.5 do:96.7 L:50	14	307.234	steering rack gaiter	1H0 422 831 B	D:41 d:10 L:210

Copyright 2021

CORDOBA (6K1, 6K2) 02/1993 - 10/2002
CORDOBA VARIO (6K5) 06/1999 - 12/2002

MS

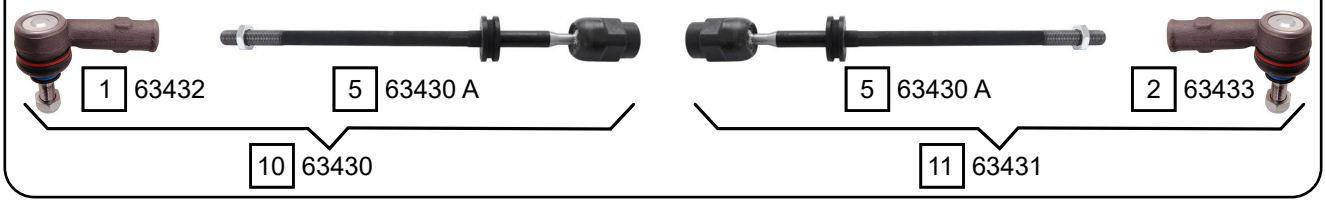

PS -> CHAS 6K-ZR036 750
-> CHAS 6K-ZR546 756

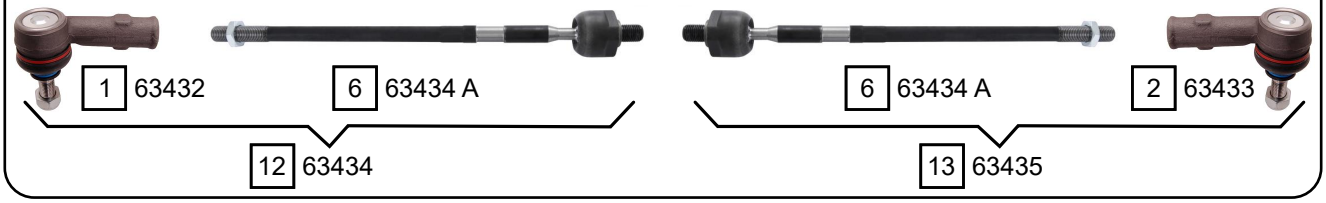

PS CHAS 6K-ZR036 751 - 6K-TR081 919
CHAS 6K-ZR546 757 - 6K-TR081 919

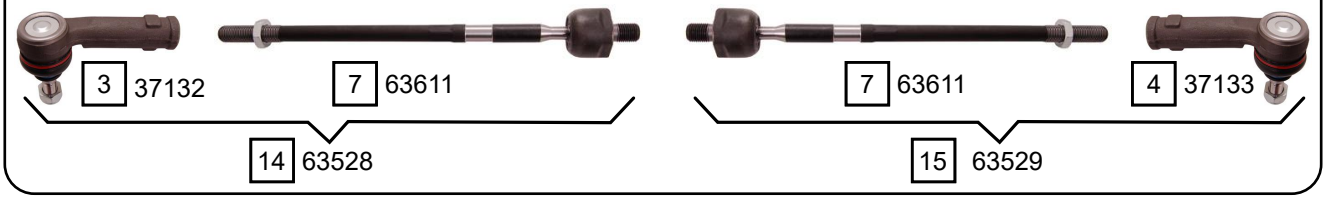

PS CHAS 6K-TR081 920 - 6K-X399 999

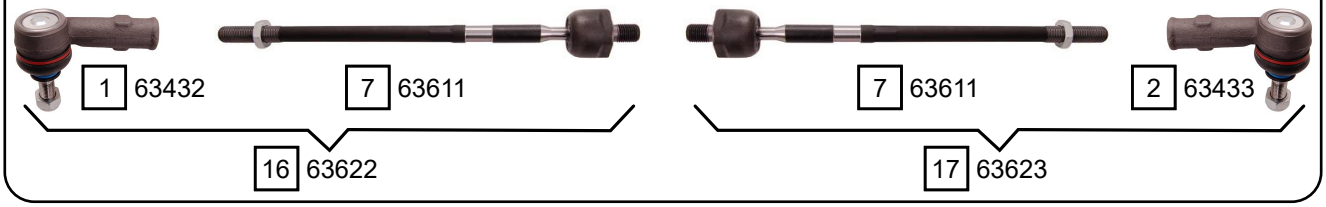

PS 6K1 SX COUPE CHAS 6K-TR130 000 - 6K-X399 999
6K2 CHAS 6K-X400 000 ->

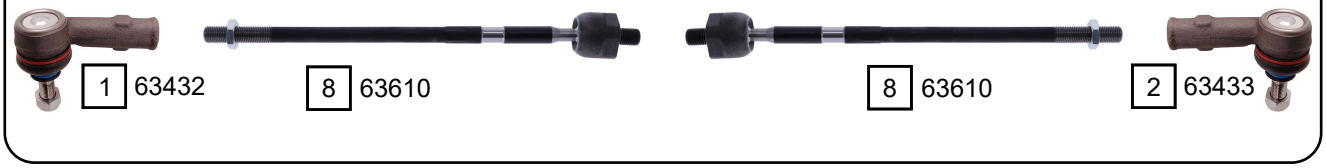

PS 6K2 SPORT SUSP. CHAS 6K-X400 000 ->

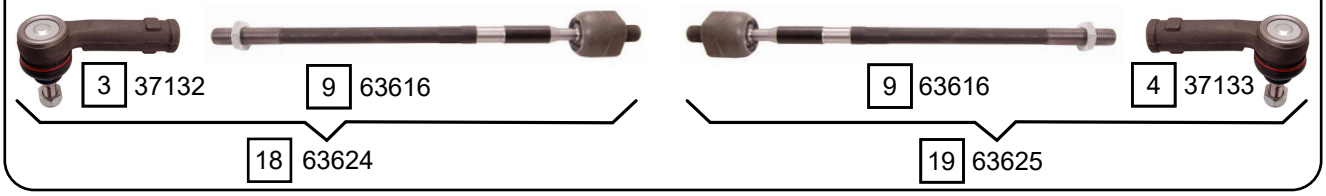

Ref.	Sidem Ref.	Description	OE-number	Measures	Ref.	Sidem Ref.	Description	OE-number	Measures
1	63432	tie rod end left	6N0 419 811	c:12.6 th:FM14x1.5R	11	63431	tie rod right	191 419 804	c:12.6
2	63433	tie rod end right	6N0 422 812	c:12.6 th:FM14x1.5R	12	63434	tie rod left	191 422 803 A	c:12.6
3	37132	tie rod end	6X0 422 811	c:12.7 th:FM14X1.5R	13	63435	tie rod right	191 422 804 A	c:12.6
4	37133	tie rod end	6X0 422 812	c:12.7 th:FM14X1.5R	14	63528	tie rod left	6K0 422 803	c:12.7
5	63430 A	axial joint	Part of	th:FM22X1.5R L:365	15	63529	tie rod right	6K0 422 804	c:12.7
6	63434 A	axial joint	Part of	th:MM14X1.5R L:341	16	63622	tie rod left	6K0 422 803 D	c:12.6
7	63611	axial joint	Part of	th:MM14X1.5R L:319	17	63623	tie rod right	6K0 422 804 D	c:12.6
8	63610	axial joint	Part of	th:MM14X1.5R L:342	18	63624	tie rod left	6K0 422 803 F	c:12.7
9	63616	axial joint	Part of	th:MM14X1.5R L:320	19	63625	tie rod right	6K0 422 804 F	c:12.7
10	63430	tie rod left	191 419 803	c:12.6					

Copyright 2021

SEAT
CORDOBA

CORDOBA (6K1, 6K2) 02/1993 - 10/2002
CORDOBA VARIO (6K5) 06/1999 - 12/2002

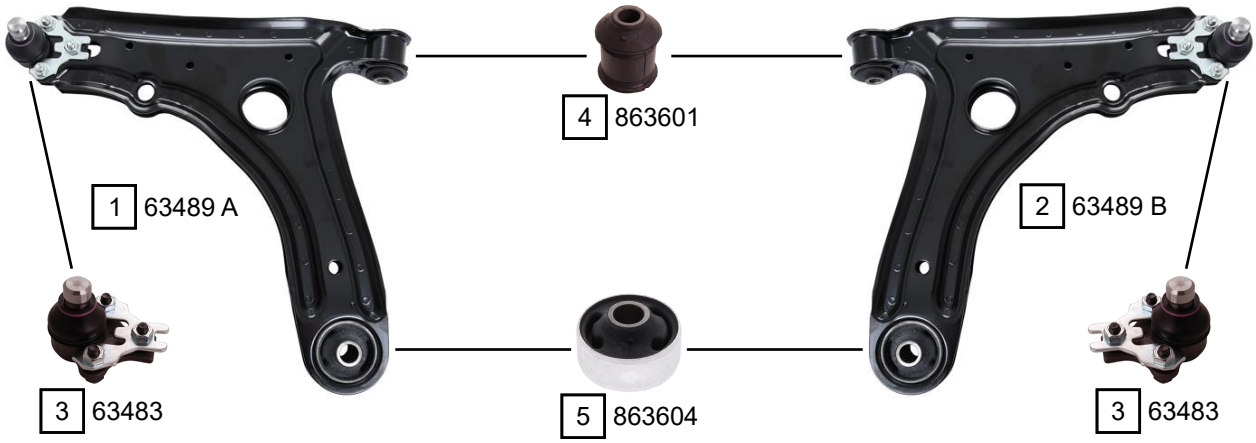

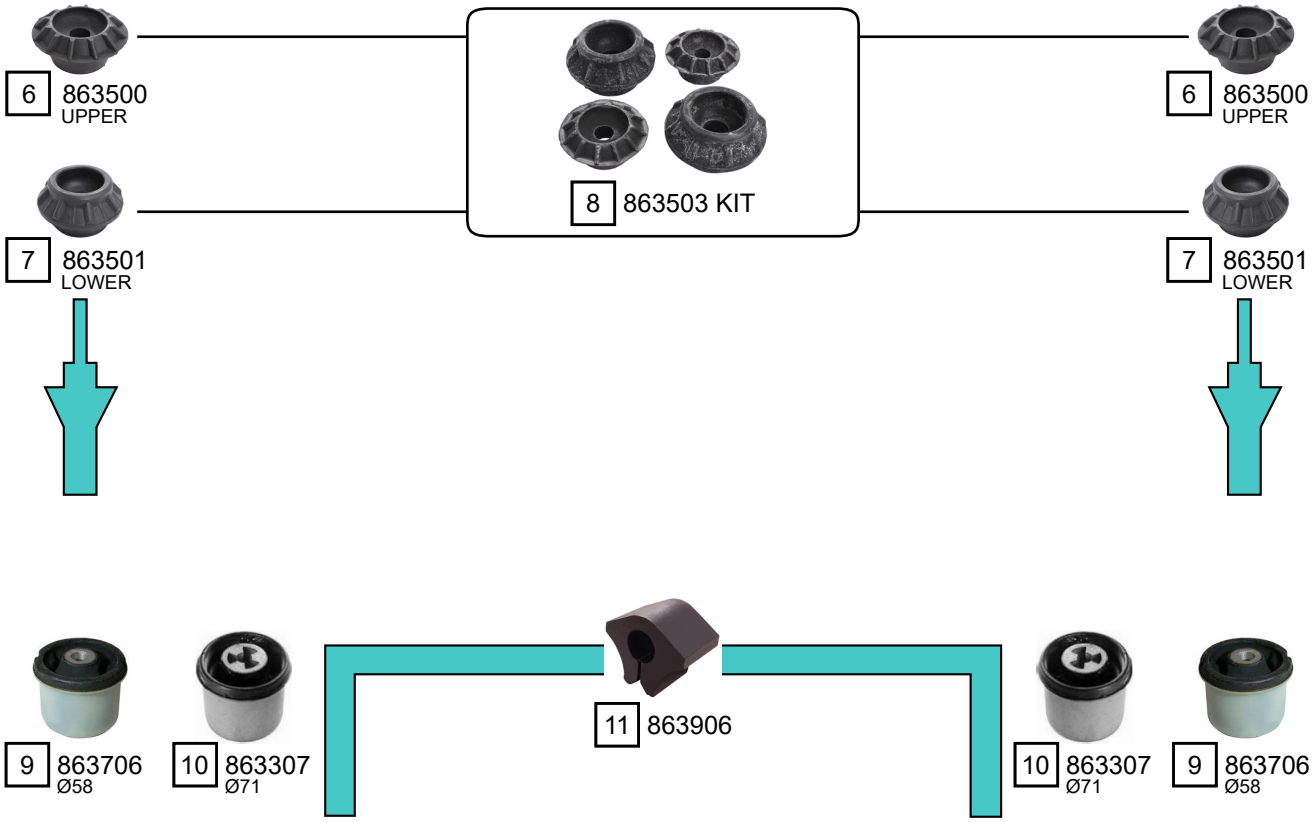

Ref.	Sidem Ref.	Description	OE-number	Measures	Ref.	Sidem Ref.	Description	OE-number	Measures
1	63489 A	TCA left wbj	191 407 151 B S1	c:19	7	863501	strut mount	191 512 333	di:17.5 do:70 L:40
2	63489 B	TCA right wbj	191 407 151 B S2	c:19	8	863503 KIT	strut mount kit	191 512 335 S1	di:13.5
3	63483	ball joint lower	357 407 365 A	c:19	9	863706	mounting axle body	6N0 501 541 D	di:10.1 do:58
4	863601	silentblock for TCA	357 407 182	di:12 do:32.6 (*)	10	863307	mounting axle body	6K0 501 541 A	di:10 do:71
5	863604	silentblock for TCA	191 407 181 D	di:17 do:60.1 (*)	11	863906	stabiliser mounting	871 511 423	di:16.5
6	863500	strut mount	191 512 335	di:13.5 do:59 L:27.5					

Copyright 2021

CORDOBA (6L2) 11/2002 - 11/2009

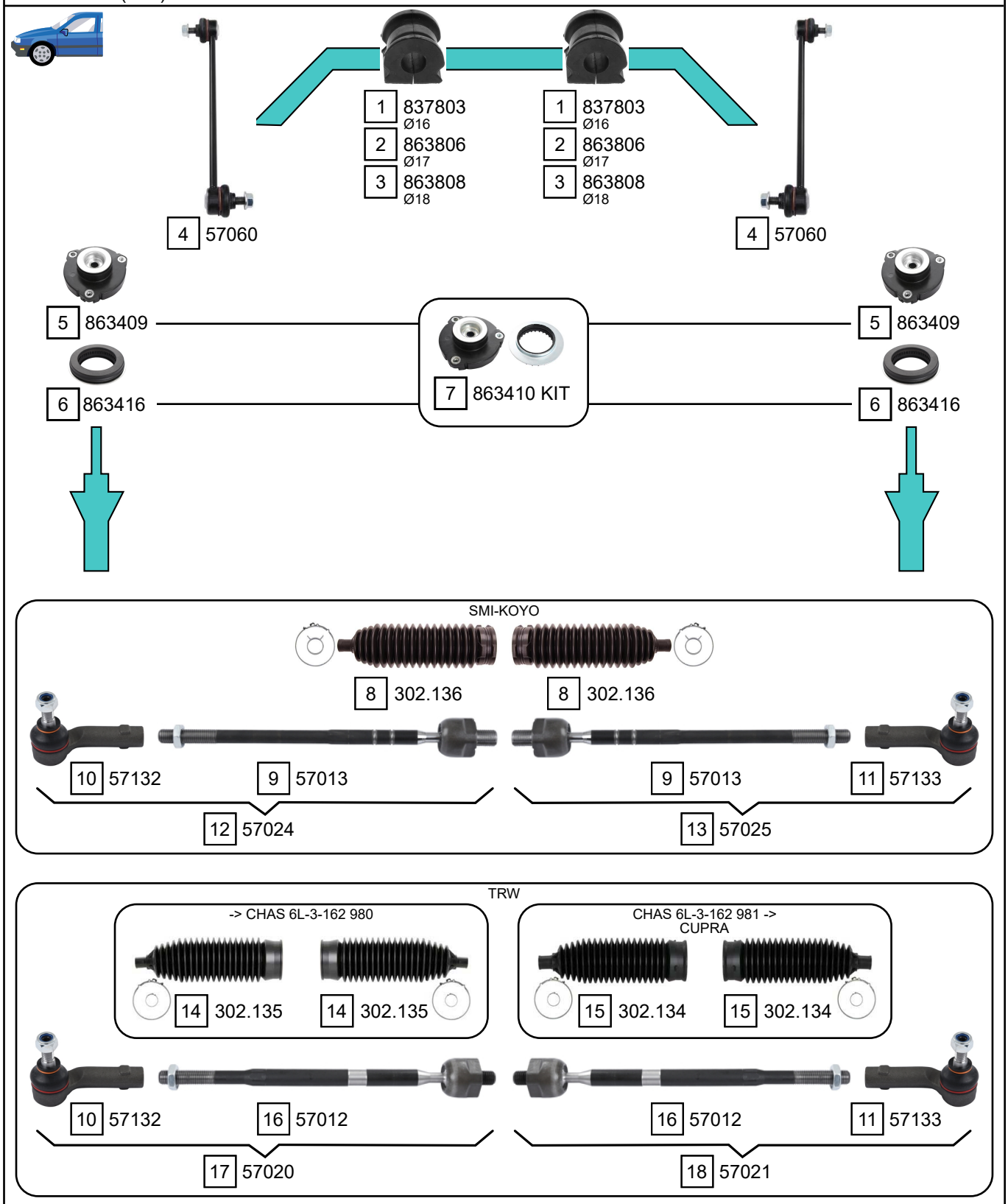

Ref.	Sidem Ref.	Description	OE-number	Measures	Ref.	Sidem Ref.	Description	OE-number	Measures
1	837803	stabiliser mounting	6Q0 411 314 P	di:16	10	57132	tie rod end left	6R0 423 811	c:13.4 th:FM14x1.5R
2	863806	stabiliser mounting	6Q0 411 314 Q	di:17	11	57133	tie rod end right	6R0 423 812	c:13.4 th:FM14x1.5R
3	863808	stabiliser mounting	6Q0 411 314 R	di:18	12	57024	tie rod left	6Q0 423 803 G	c:13.4
4	57060	stabiliser link	6R0 411 315	L:270	13	57025	tie rod right	6Q0 423 804 G	c:13.4
5	863409	strut mount	6N0 412 331 E	di:14.3 do:66 L:49	14	302.135	steering rack gaiter	6E0 419 831	D:48 d:12 L:200
6	863416	bearing	1K0 412 249 B	di:68.5 do:112 L:25.5	15	302.134	steering rack gaiter	6Q0 423 831 D	D:48 d:14 L:205
7	863410 KIT	strut mount kit	6N0 412 331 E S2	di:14.3	16	57012	axial joint	Part of	th:MM14X1.5R L:297
8	302.136	steering rack gaiter	6Q0 423 831 A	D:46 d:13 L:210	17	57020	tie rod left	6Q0 423 803 P	c:13.4
9	57013	axial joint	6Q0 423 810 C	th:MM16x1.5R L:300	18	57021	tie rod right	6Q0 423 804 P	c:13.4

Copyright 2021

SEAT
CORDOBA

CORDOBA (6L2) 11/2002 - 11/2009

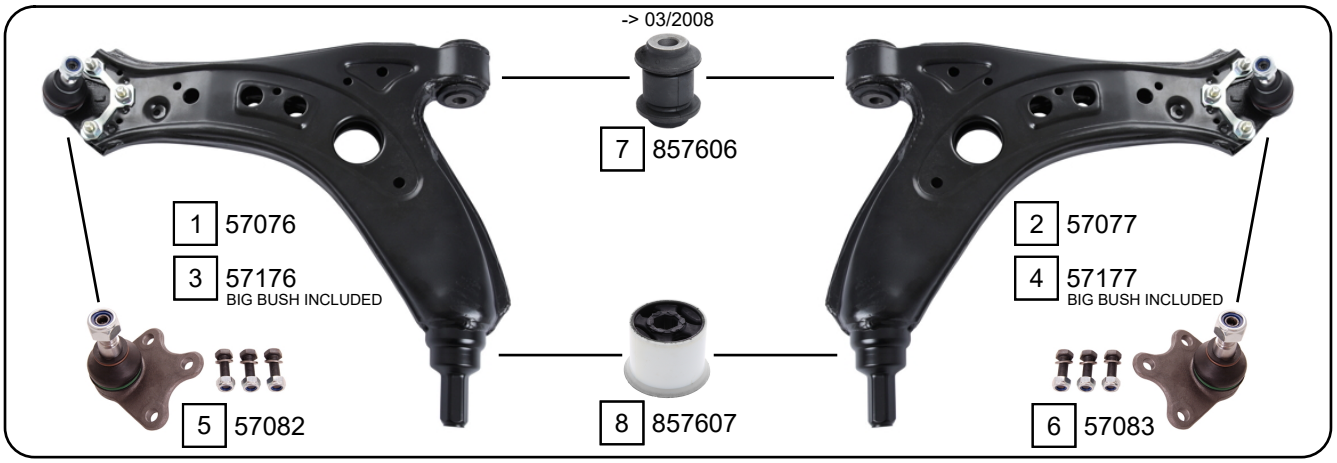

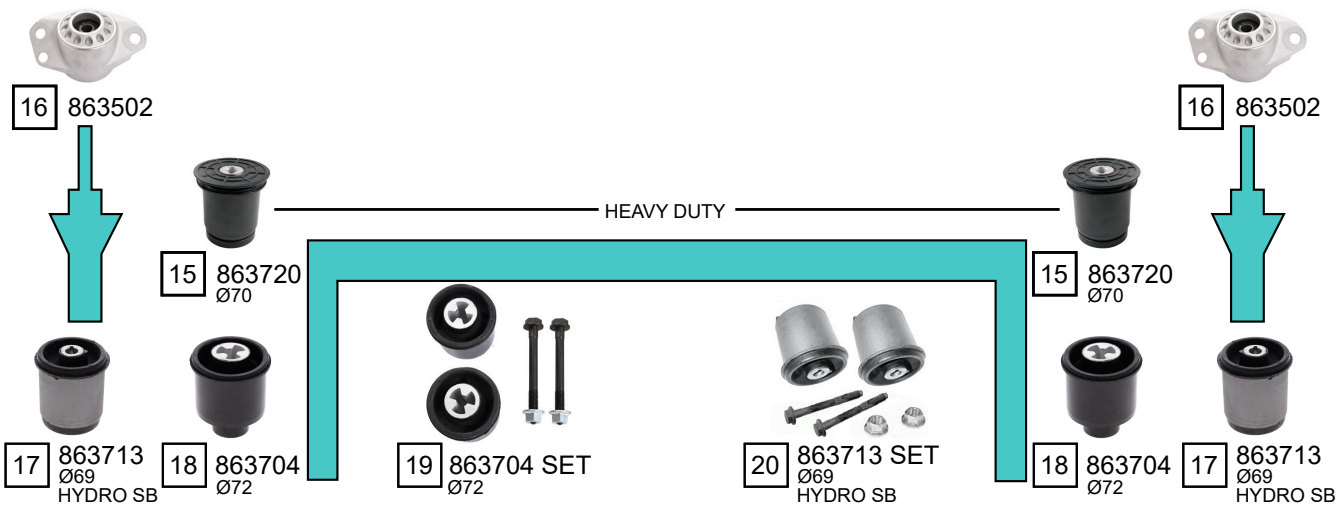

Ref.	Sidem Ref.	Description	OE-number	Measures	Ref.	Sidem Ref.	Description	OE-number	Measures
1	57076	TCA left wbj	6Q0 407 151 L S1	c:14.8	11	57084	ball joint left	6R0 407 365 A	c:14.9
2	57077	TCA right wbj	6Q0 407 151 L S2	c:14.8	12	57085	ball joint right	6R0 407 366 A	c:14.9
3	57176	TCA left wbj	6Q0 407 151 L S3	c:14.8	13	863601	silentblock for TCA	357 407 182	di:12 do:32.6 (*)
4	57177	TCA right wbj	6Q0 407 151 L S4	c:14.8	14	863602	silentblock for TCA	1J0 407 181	di:13 do:60 (*)
5	57082	ball joint	6Q0 407 365 A	c:14.8	15	863720	mounting axle body	6Q0 501 541 E	di:12.1 do:70
6	57083	ball joint	6Q0 407 366 A	c:14.8	16	863502	strut mount	6R0 513 353	di:11.1 do:62 L:58.8
7	857606	silentblock for TCA	6Q0 407 182 A	di:12.1 do:32 (*)	17	863713	mounting axle body	1J0 501 541 D	di:13.2 do:69
8	857607	silentblock for TCA	1K0 407 183 E	di:18.5 do:64 (*)	18	863704	mounting axle body	1J0 501 541 C	di:12 do:71.5
9	57170	TCA left wbj	6R0 407 151	c:15	19	863704 SET	mounting axle body set	1J0 501 541 C S1	do:71.5
10	57171	TCA right wbj	6R0 407 152	c:15	20	863713 SET	mounting axle body set	1J0 501 541 D S1	do:69

Copyright 2021

EXEO (3R2) 03/2009 - 05/2015
EXEO ST (3R5) 06/2009 - 05/2015

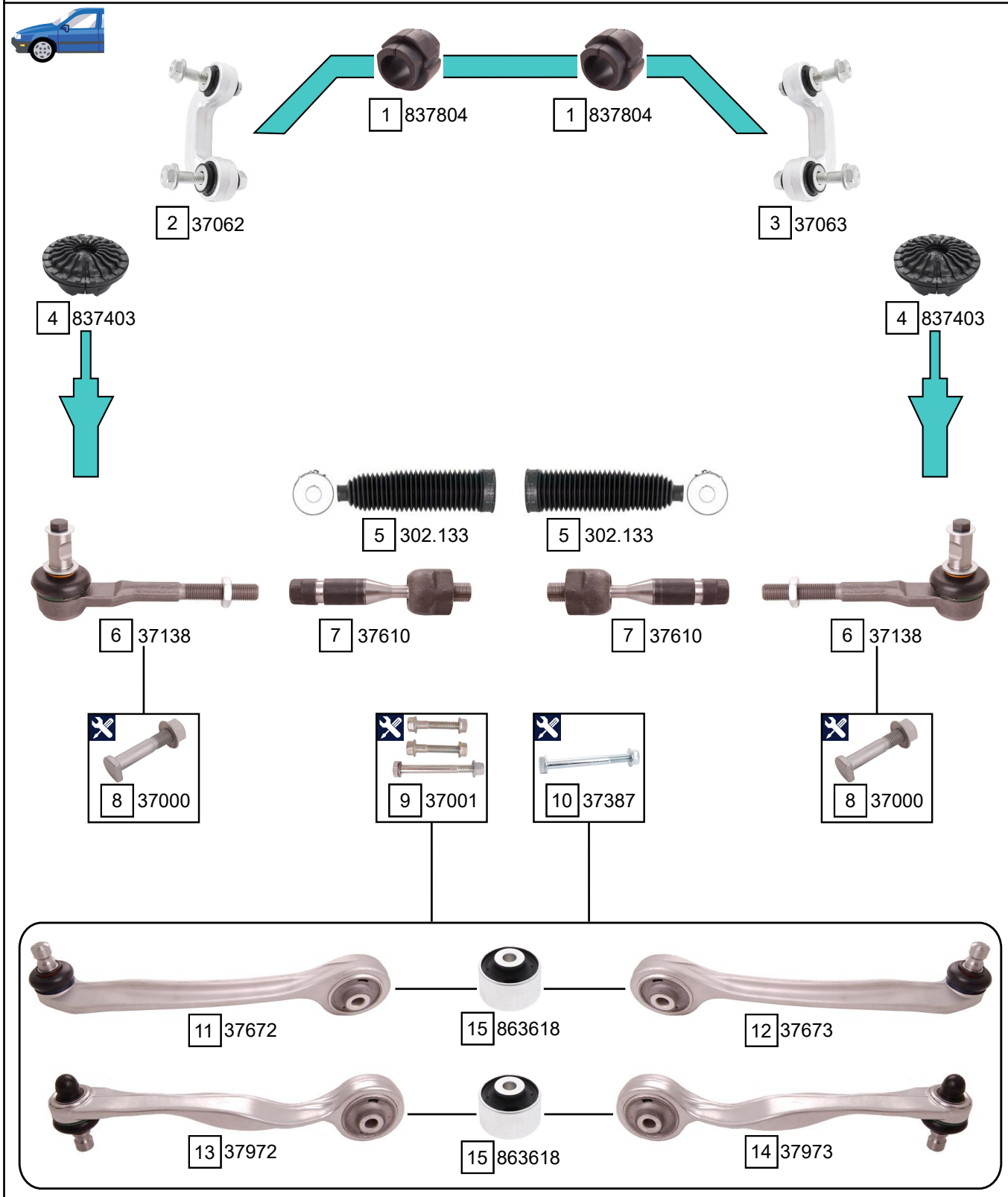

Ref.	Sidem Ref.	Description	OE-number	Measures	Ref.	Sidem Ref.	Description	OE-number	Measures
1	837804	stabiliser mounting	4D0 411 327 J	di:29	9	37001	mounting kit	N 105 768 02 S1	th:M10x1.5R
2	37062	stabiliser link left	8E0 411 317	L:90	10	37387	mounting kit	N 102 861 02 S1	th:MM10x1.5R L:72
3	37063	stabiliser link right	8E0 411 318	L:90	11	37672	TCA left wbj	8E0 407 505 P	c:16
4	837403	strut mount	8E0 412 377 C	di:12.3 do:112 L:57.5	12	37673	TCA right wbj	8E0 407 506 P	c:16
5	302.133	steering rack gaiter	8E0 419 831	D:65 d:21 L:254	13	37972	TCA left wbj	8E0 407 509 P	c:16
6	37138	tie rod end	4F0 498 811 A	c:17.5 th:MM14X1.5R	14	37973	TCA right wbj	8E0 407 510 P	c:16
7	37610	axial joint	8E0 422 821 C	th:MM16X1.5R L:128	15	863618	silentblock for TCA	8D0 407 515 C	di:10 do:46.5 (*)
8	37000	mounting kit	4D0 407 192 C S1	th:M10x1.5R					

Copyright 2021

SEAT
EXEO

EXEO (3R2) 03/2009 - 05/2015
EXEO ST (3R5) 06/2009 - 05/2015

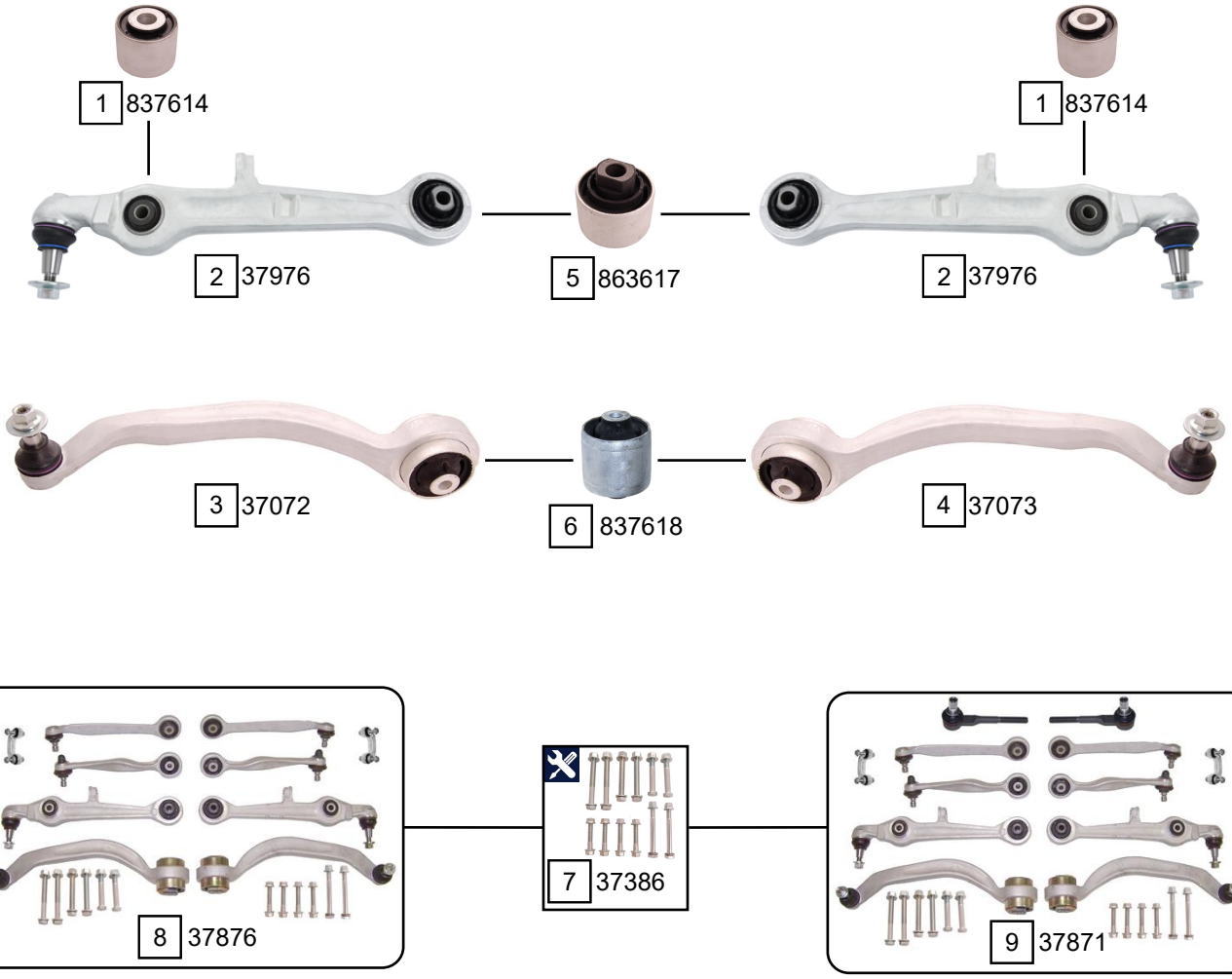

Ref.	Sidem Ref.	Description	OE-number	Measures	Ref.	Sidem Ref.	Description	OE-number	Measures
1	837614	silentblock for TCA	8E0 407 181 C	di:12.3 do:40.3 (*)	6	837618	silentblock for TCA	4F0 407 183 C	di:12.2 do:64.8 (*)
2	37976	TCA wbj	8E0 407 151 R	c:16.3	7	37386	mounting kit	Part of	
3	37072	TCA left wbj	8E0 407 693 AL	c:15.4	8	37876	set TCA + stab. link	8E0 407 693 AL S2	
4	37073	TCA right wbj	8E0 407 694 AL	c:15.4	9	37871	set TCA + stab. link + tre	8E0 407 693 AL S3	
5	863617	silentblock for TCA	4D0 407 182 G	di:12.2 do:50.4 (*)					

Copyright 2021

EXEO (3R2) 03/2009 - 05/2015
EXEO ST (3R5) 06/2009 - 05/2015

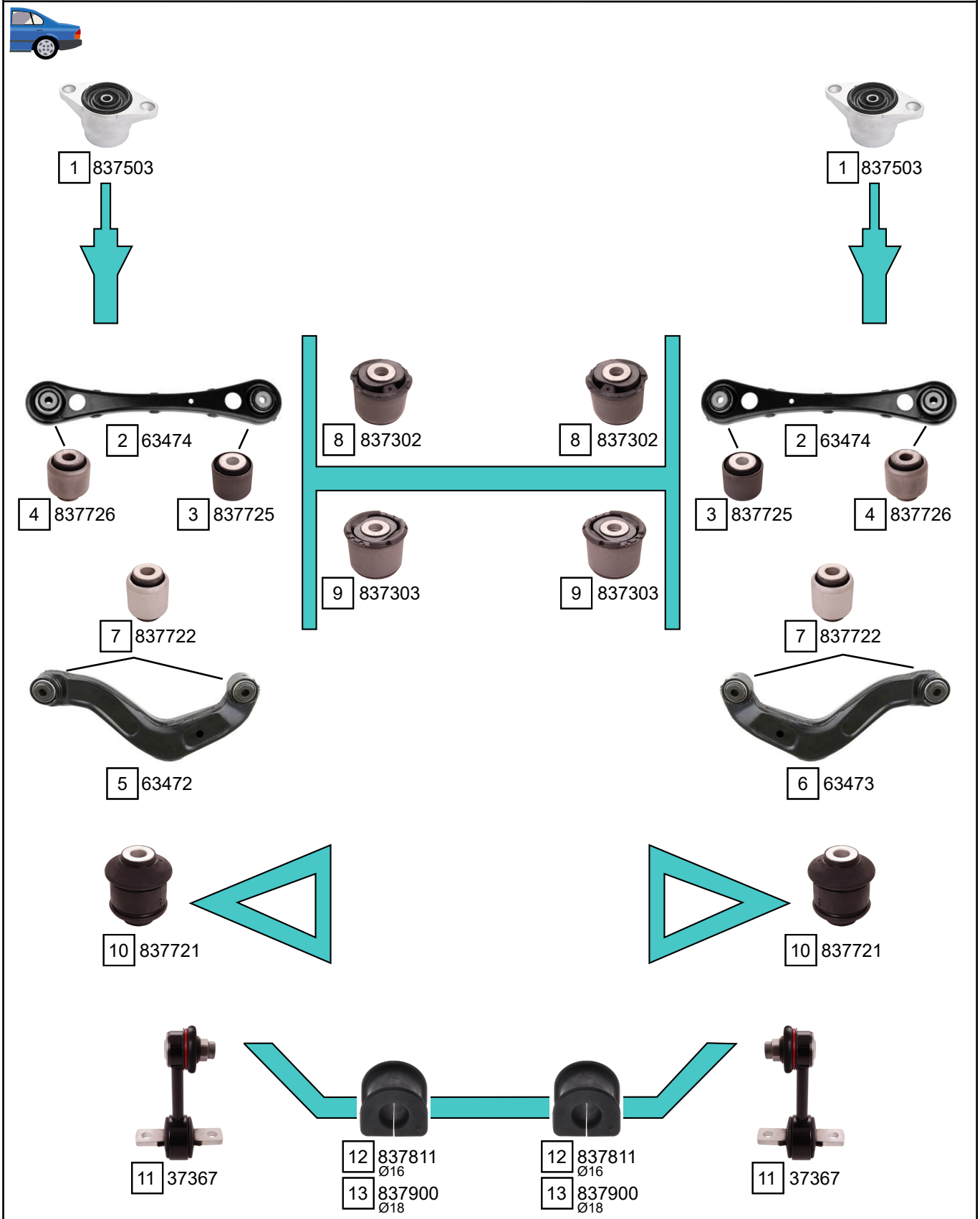

Ref.	Sidem Ref.	Description	OE-number	Measures	Ref.	Sidem Ref.	Description	OE-number	Measures
1	837503	strut mount	4F0 513 353 D	di:10.6 do:73.5 L:66	8	837302	mounting axle body	8E0 505 145 AR	di:19.3 do:80.5
2	63474	TCA	8E0 501 529 P	L:346	9	837303	mounting axle body	8E0 505 145 AP	di:19.3 do:80.5
3	837725	silentblock for TCA	Part of	di:12.3 do:40.2 (*)	10	837721	silentblock for TCA	8E0 505 203 D	di:12.2 do:44 (*)
4	837726	silentblock for TCA	Part of	di:12.2 do:41.5 (*)	11	37367	stabiliser link rear axle	8E0 505 465 AF	L:91
5	63472	TCA left	8E0 505 323 M	L:307	12	837811	stabiliser mounting	4B0 511 327	di:16
6	63473	TCA right	8E0 505 324 M	L:307	13	837900	stabiliser mounting	8E0 511 327 A	di:17.5
7	837722	silentblock for TCA	8E0 501 541 S	di:12.2 do:36.2 (*)					

Copyright 2021

SEAT
FURA

FURA (025A) 01/1982 - 12/1986

MS

4 303.031

5 303.032

-> 09/1982

1 19334

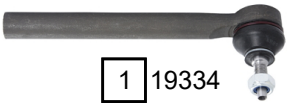

1 19334

10/1982 ->

2 19830

3 19637 A

3 19637 A

2 19830

Ref.	Sidem Ref.	Description	OE-number	Measures	Ref.	Sidem Ref.	Description	OE-number	Measures
1	19334	tie rod end	425 45 20	c:11.9 th:FM14x1R	4	303.031	steering rack gaiter	SE 138 162 131 A	D:42 d:10 L:125
2	19830	tie rod end	598 34 06	c:12 th:FM12X1.5R	5	303.032	steering rack gaiter	SE 138 162 132 A	D:26 d:10 L:165
3	19637 A	axial joint	SE 141 162 449 A	th:FM14X1.5R L:192					

Copyright 2021

IBIZA I (021A) 07/1984 - 12/1993

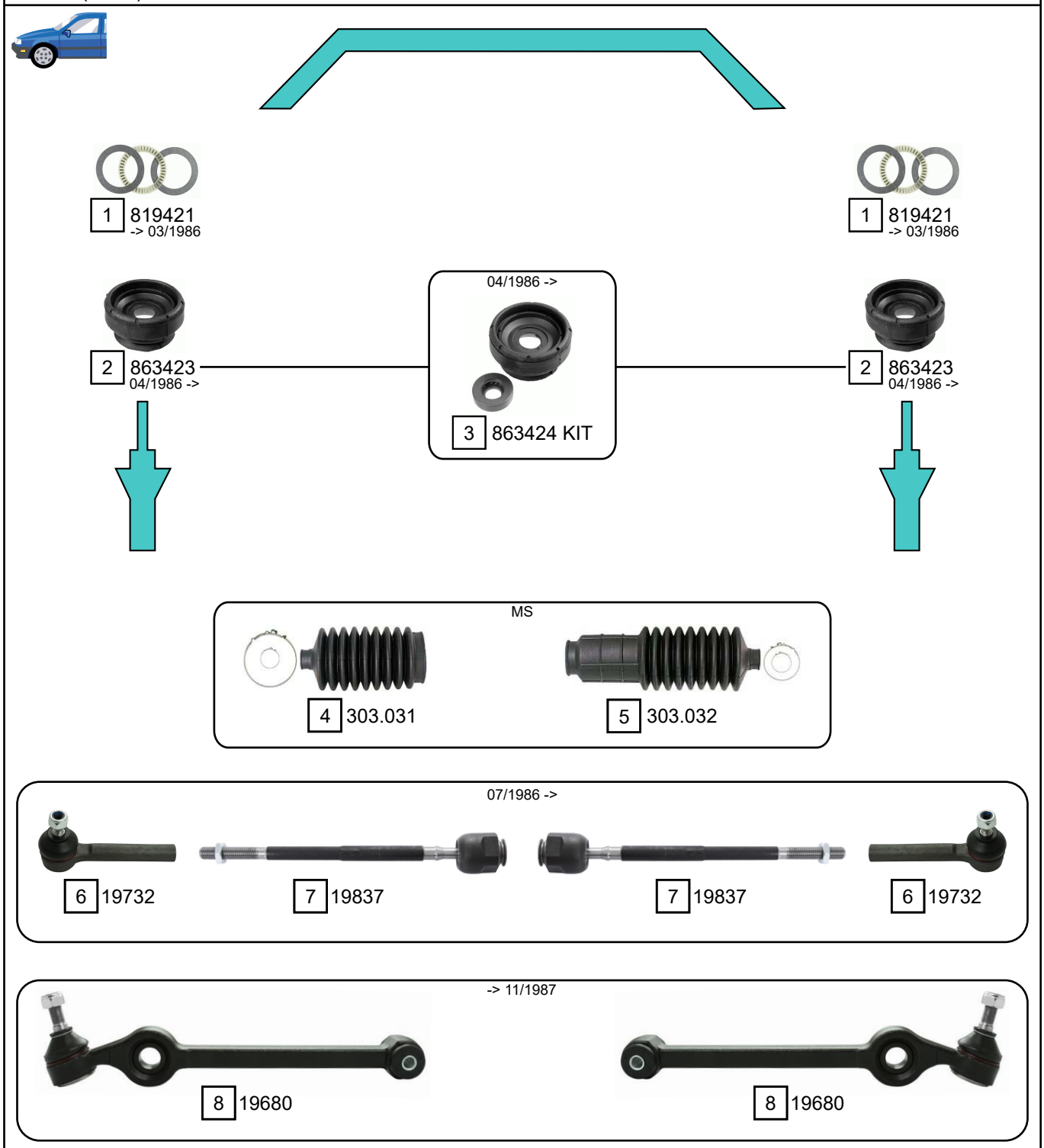

Ref.	Sidem Ref.	Description	OE-number	Measures	Ref.	Sidem Ref.	Description	OE-number	Measures
1	819421	bearing	Part of	di:50 do:70 L:3.6	5	303.032	steering rack gaiter	SE 138 162 132 A	D:26 d:10 L:165
2	863423	strut mount	SE 021 156 228 A	do:75.5 L:40	6	19732	tie rod end	SE 022 162 406 A	c:12 th:FM12X1.5R
3	863424 KIT	strut mount kit	SE 021 156 228 A S1	di:21.2 do:76.5 L:40.5	7	19837	axial joint	SE 022 162 449 A	th:FM14X1.5R L:278
4	303.031	steering rack gaiter	SE 138 162 131 A	D:42 d:10 L:125	8	19680	TCA wbj	SE 138 156 110 A	c:13

Copyright 2021

SEAT
IBIZA

IBIZA II (6K1) 03/1993 - 02/2002

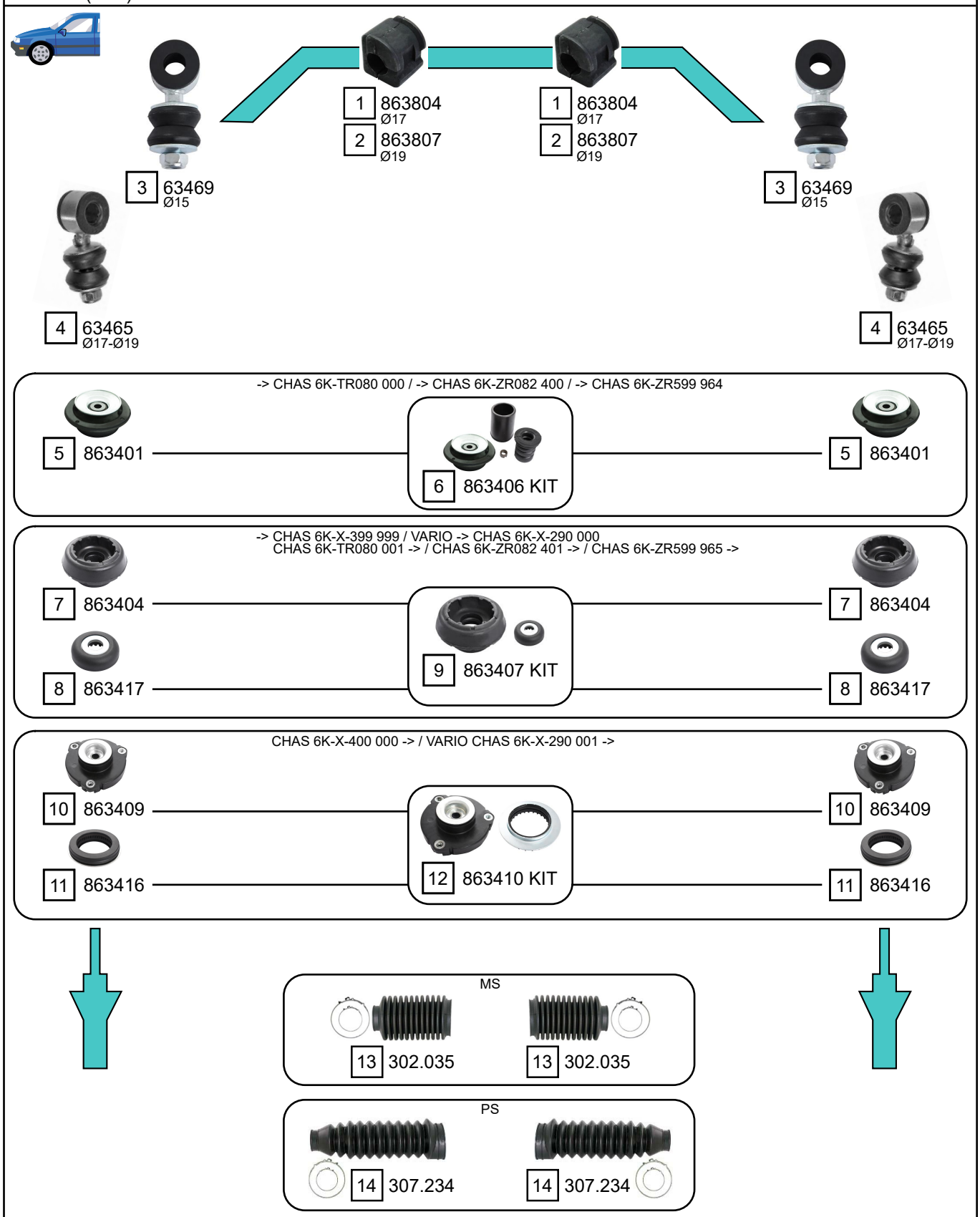

Ref.	Sidem Ref.	Description	OE-number	Measures	Ref.	Sidem Ref.	Description	OE-number	Measures
1	863804	stabiliser mounting	191 411 314	di:17	8	863417	bearing	1J0 412 249	di:14.3 do:45.3 L:13.4
2	863807	stabiliser mounting	1H0 411 314	di:19	9	863407 KIT	strut mount kit	7M0 412 331 S1	di:14.3 do:98 L:50
3	63469	stabiliser link	191 411 315 B	L:76	10	863409	strut mount	6N0 412 331 E	di:14.3 do:66 L:49
4	63465	stabiliser link	6K0 411 315	L:78	11	863416	bearing	1K0 412 249 B	di:68.5 do:112 L:25.5
5	863401	strut mount	191 412 329	di:14.5 do:89.3 L:52	12	863410 KIT	strut mount kit	6N0 412 331 E S2	di:14.3
6	863406 KIT	strut mount kit	191 412 329 S1	di:14.5 do:127 L:53	13	302.035	steering rack gaiter	191 419 831	D:41 d:25 L:120
7	863404	strut mount	7M0 412 331	di:26.5 do:96.7 L:50	14	307.234	steering rack gaiter	1H0 422 831 B	D:41 d:10 L:210

Copyright 2021

IBIZA II (6K1) 03/1993 - 02/2002

MS

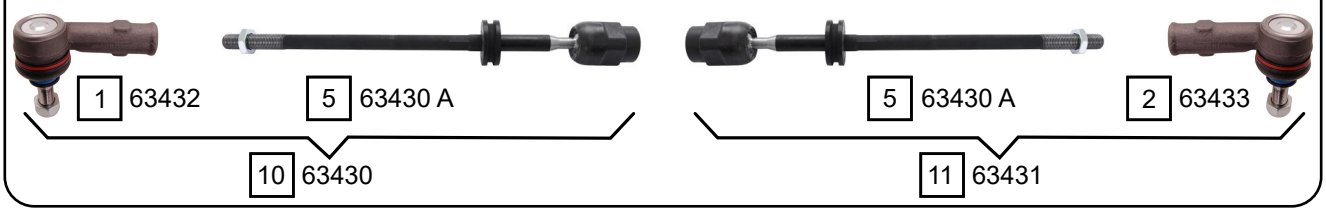

PS -> CHAS 6K-ZR036 750
-> CHAS 6K-ZR546 756

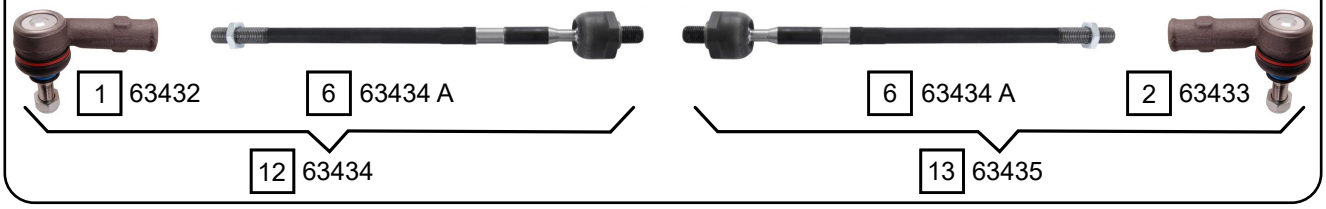

PS CHAS 6K-ZR036 751 - 6K-TR081 919
CHAS 6K-ZR546 757 - 6K-TR081 919

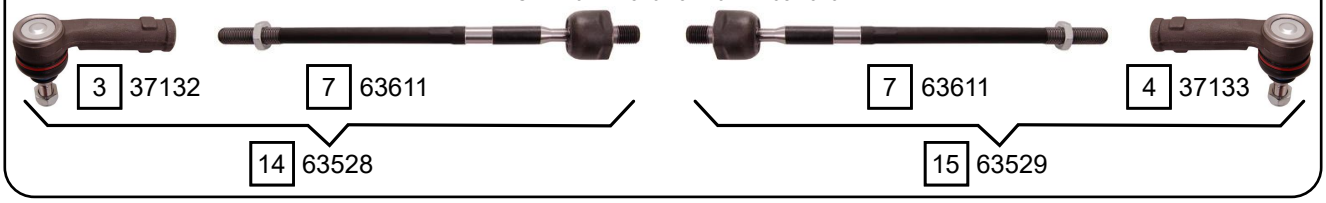

PS CHAS 6K-TR081 920 - 6K-X399 999

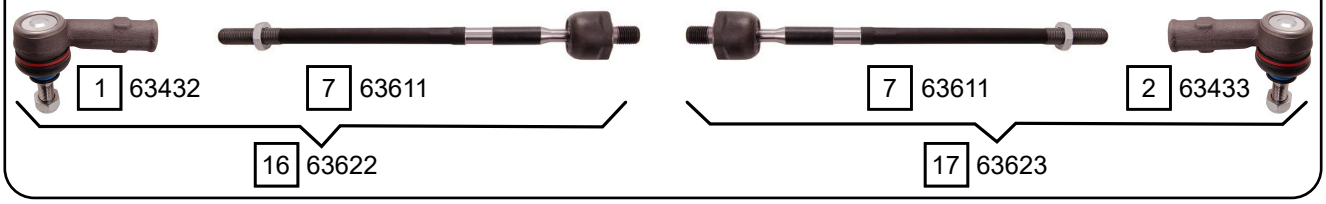

PS GTI MODEL CHAS 6K-TR130 000 - 6K-X399 999
CHAS 6K-X400 000 ->

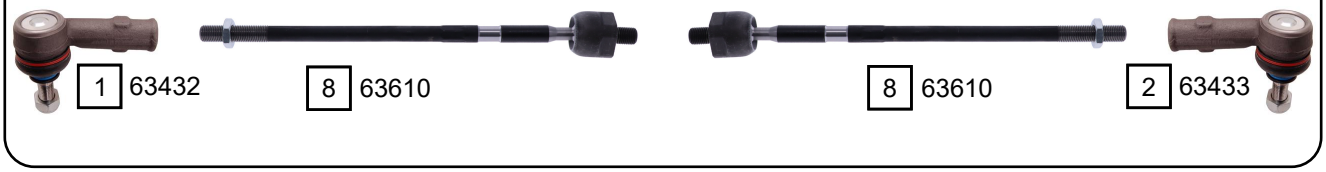

PS SPORT SUSP. CHAS 6K-X400 000 ->

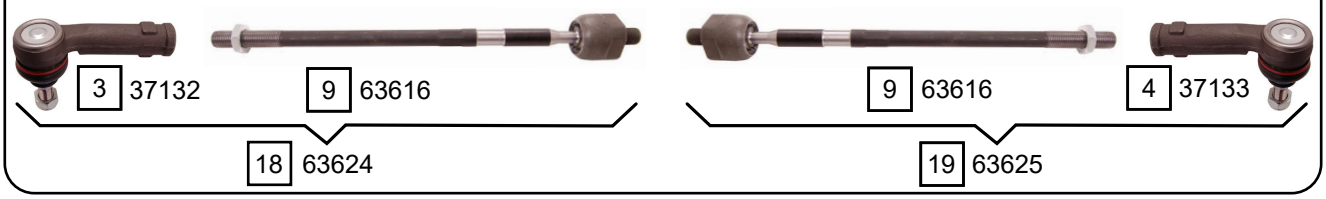

Ref.	Sidem Ref.	Description	OE-number	Measures	Ref.	Sidem Ref.	Description	OE-number	Measures
1	63432	tie rod end left	6N0 419 811	c:12.6 th:FM14x1.5R	11	63431	tie rod right	191 419 804	c:12.6
2	63433	tie rod end right	6N0 422 812	c:12.6 th:FM14x1.5R	12	63434	tie rod left	191 422 803 A	c:12.6
3	37132	tie rod end	6X0 422 811	c:12.7 th:FM14X1.5R	13	63435	tie rod right	191 422 804 A	c:12.6
4	37133	tie rod end	6X0 422 812	c:12.7 th:FM14X1.5R	14	63528	tie rod left	6K0 422 803	c:12.7
5	63430 A	axial joint	Part of	th:FM22X1.5R L:365	15	63529	tie rod right	6K0 422 804	c:12.7
6	63434 A	axial joint	Part of	th:MM14X1.5R L:341	16	63622	tie rod left	6K0 422 803 D	c:12.6
7	63611	axial joint	Part of	th:MM14X1.5R L:319	17	63623	tie rod right	6K0 422 804 D	c:12.6
8	63610	axial joint	Part of	th:MM14X1.5R L:342	18	63624	tie rod left	6K0 422 803 F	c:12.7
9	63616	axial joint	Part of	th:MM14X1.5R L:320	19	63625	tie rod right	6K0 422 804 F	c:12.7
10	63430	tie rod left	191 419 803	c:12.6					

Copyright 2021

SEAT
IBIZA

IBIZA II (6K1) 03/1993 - 02/2002

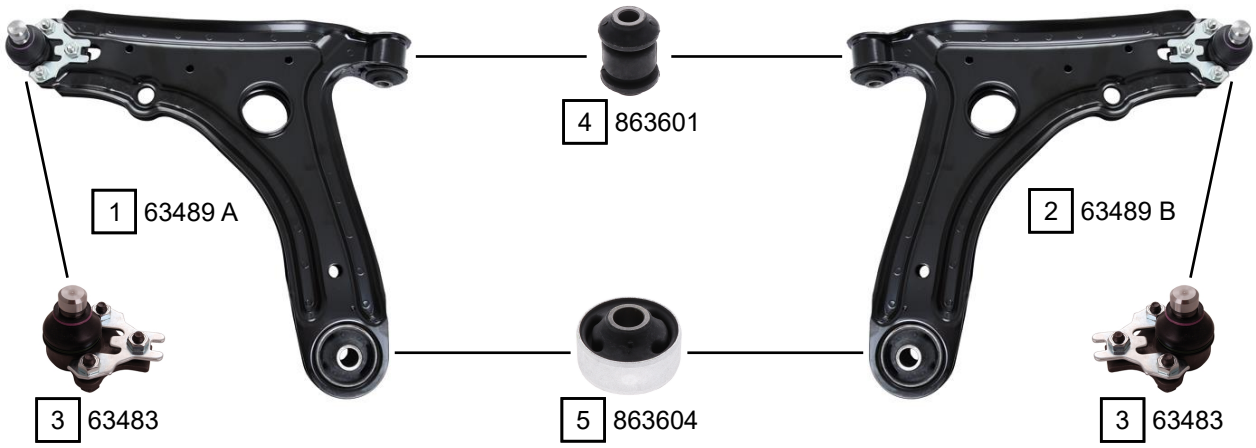

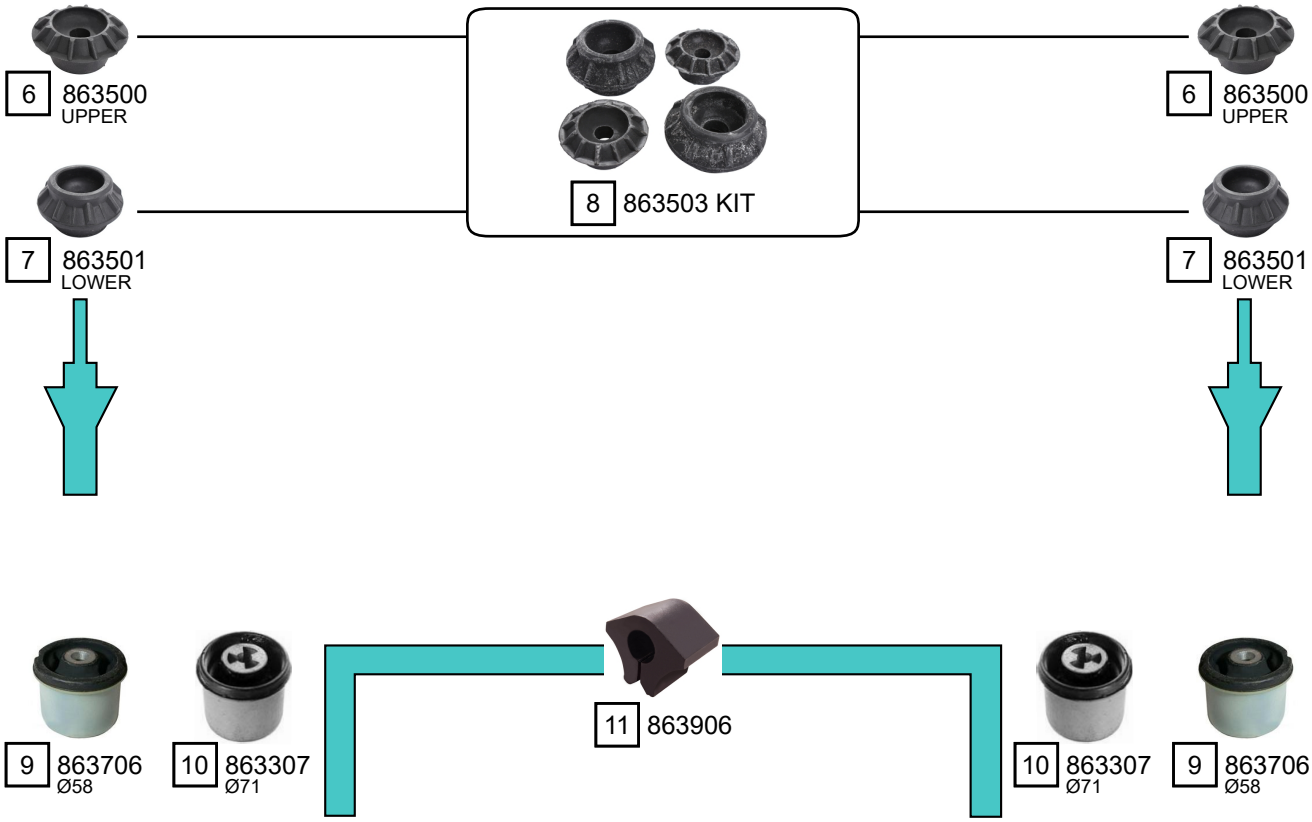

Ref.	Sidem Ref.	Description	OE-number	Measures	Ref.	Sidem Ref.	Description	OE-number	Measures
1	63489 A	TCA left wbj	191 407 151 B S1	c:19	7	863501	strut mount	191 512 333	di:17.5 do:70 L:40
2	63489 B	TCA right wbj	191 407 151 B S2	c:19	8	863503 KIT	strut mount kit	191 512 335 S1	di:13.5
3	63483	ball joint lower	357 407 365 A	c:19	9	863706	mounting axle body	6N0 501 541 D	di:10.1 do:58
4	863601	silentblock for TCA	357 407 182	di:12 do:32.6 (*)	10	863307	mounting axle body	6K0 501 541 A	di:10 do:71
5	863604	silentblock for TCA	191 407 181 D	di:17 do:60.1 (*)	11	863906	stabiliser mounting	871 511 423	di:16.5
6	863500	strut mount	191 512 335	di:13.5 do:59 L:27.5					

Copyright 2021

IBIZA III (6L1) 03/2002 - 11/2009

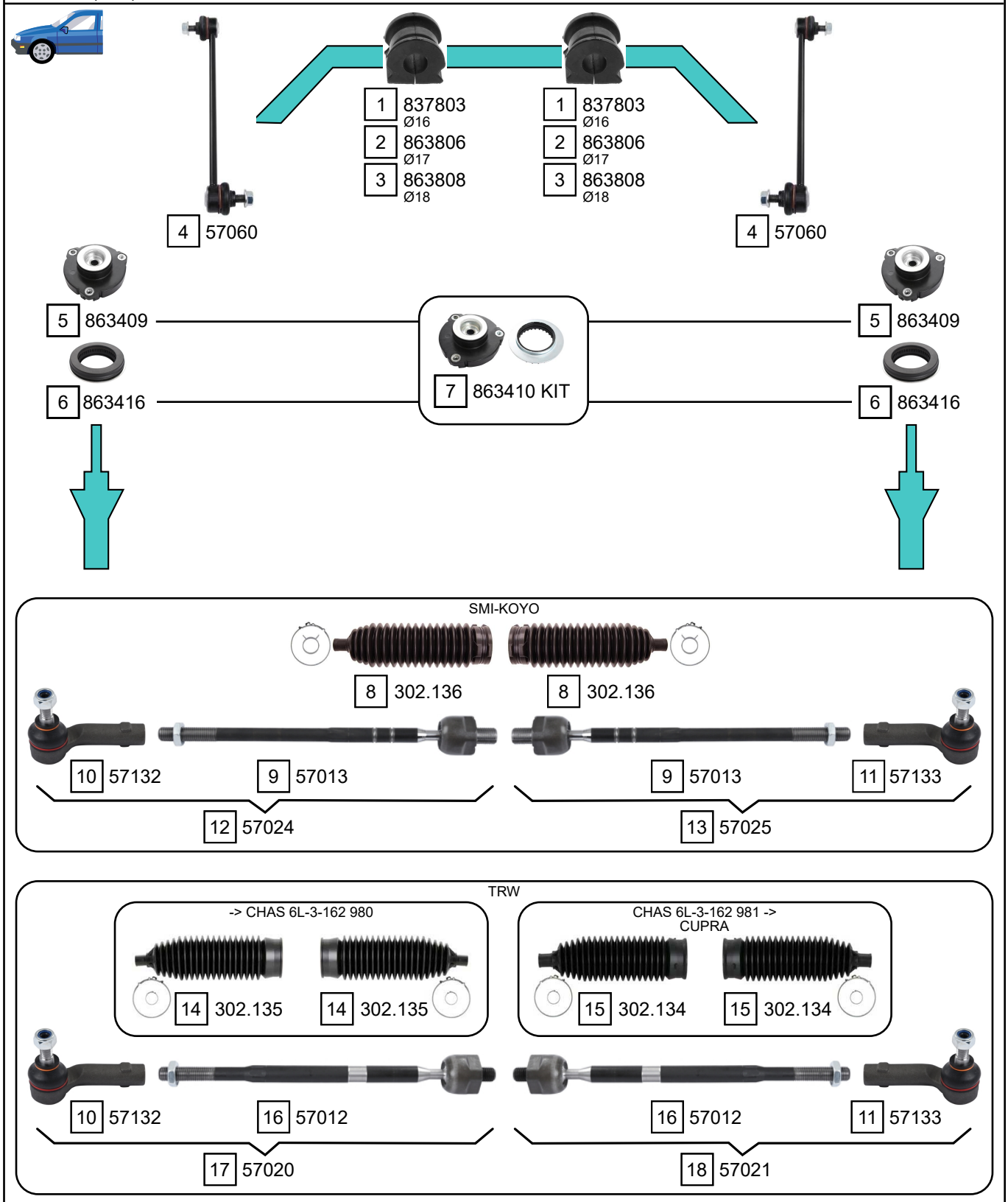

Ref.	Sidem Ref.	Description	OE-number	Measures	Ref.	Sidem Ref.	Description	OE-number	Measures
1	837803	stabiliser mounting	6Q0 411 314 P	di:16	10	57132	tie rod end left	6R0 423 811	c:13.4 th:FM14x1.5R
2	863806	stabiliser mounting	6Q0 411 314 Q	di:17	11	57133	tie rod end right	6R0 423 812	c:13.4 th:FM14x1.5R
3	863808	stabiliser mounting	6Q0 411 314 R	di:18	12	57024	tie rod left	6Q0 423 803 G	c:13.4
4	57060	stabiliser link	6R0 411 315	L:270	13	57025	tie rod right	6Q0 423 804 G	c:13.4
5	863409	strut mount	6N0 412 331 E	di:14.3 do:66 L:49	14	302.135	steering rack gaiter	6E0 419 831	D:48 d:12 L:200
6	863416	bearing	1K0 412 249 B	di:68.5 do:112 L:25.5	15	302.134	steering rack gaiter	6Q0 423 831 D	D:48 d:14 L:205
7	863410 KIT	strut mount kit	6N0 412 331 E S2	di:14.3	16	57012	axial joint	Part of	th:MM14X1.5R L:297
8	302.136	steering rack gaiter	6Q0 423 831 A	D:46 d:13 L:210	17	57020	tie rod left	6Q0 423 803 P	c:13.4
9	57013	axial joint	6Q0 423 810 C	th:MM16x1.5R L:300	18	57021	tie rod right	6Q0 423 804 P	c:13.4

Copyright 2021

SEAT
IBIZA

IBIZA III (6L1) 03/2002 - 11/2009

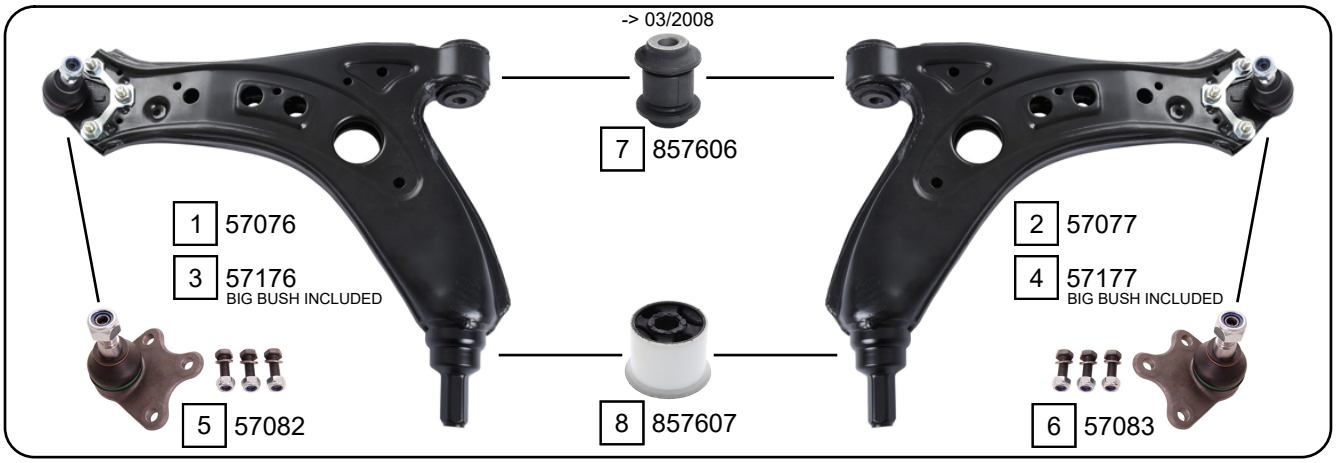

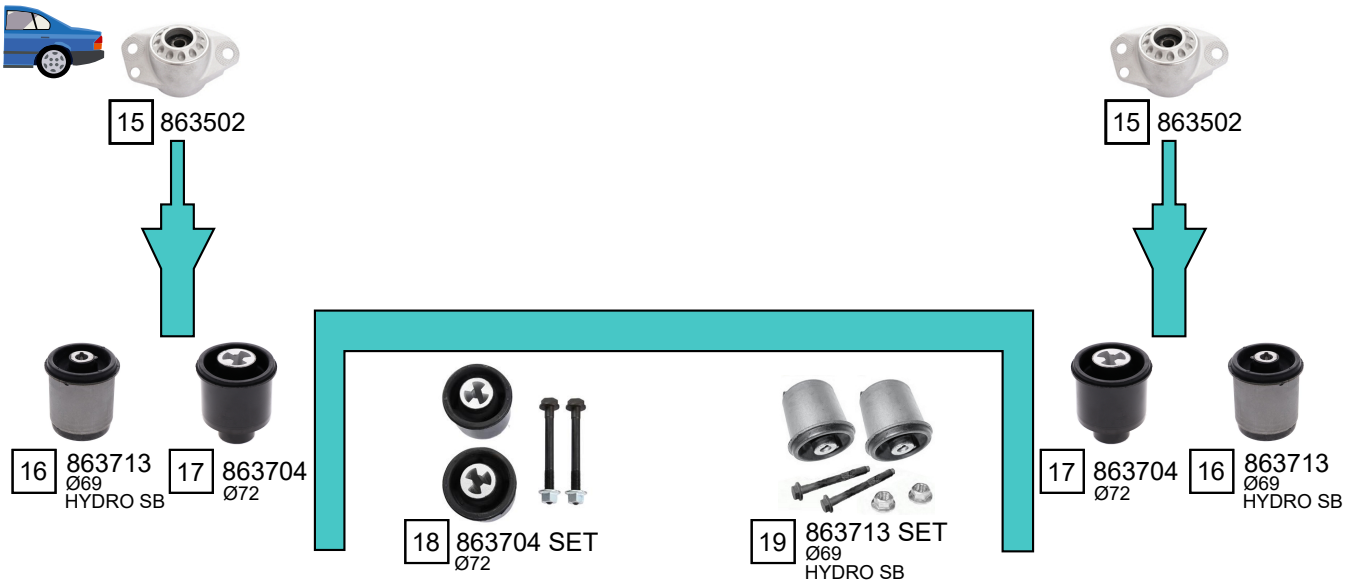

Ref.	Sidem Ref.	Description	OE-number	Measures	Ref.	Sidem Ref.	Description	OE-number	Measures
1	57076	TCA left wbj	6Q0 407 151 L S1	c:14.8	11	57084	ball joint left	6R0 407 365 A	c:14.9
2	57077	TCA right wbj	6Q0 407 151 L S2	c:14.8	12	57085	ball joint right	6R0 407 366 A	c:14.9
3	57176	TCA left wbj	6Q0 407 151 L S3	c:14.8	13	863601	silentblock for TCA	357 407 182	di:12 do:32.6 (*)
4	57177	TCA right wbj	6Q0 407 151 L S4	c:14.8	14	863602	silentblock for TCA	1J0 407 181	di:13 do:60 (*)
5	57082	ball joint	6Q0 407 365 A	c:14.8	15	863502	strut mount	6R0 513 353	di:11.1 do:62 L:58.8
6	57083	ball joint	6Q0 407 366 A	c:14.8	16	863713	mounting axle body	1J0 501 541 D	di:13.2 do:69
7	857606	silentblock for TCA	6Q0 407 182 A	di:12.1 do:32 (*)	17	863704	mounting axle body	1J0 501 541 C	di:12 do:71.5
8	857607	silentblock for TCA	1K0 407 183 E	di:18.5 do:64 (*)	18	863704 SET	mounting axle body set	1J0 501 541 C S1	do:71.5
9	57170	TCA left wbj	6R0 407 151	c:15	19	863713 SET	mounting axle body set	1J0 501 541 D S1	do:69
10	57171	TCA right wbj	6R0 407 152	c:15					

Copyright 2021

IBIZA IV (6J5, 6P1) 03/2008 ->
IBIZA IV SPORTCOUPE (6J1, 6P5) 07/2008 ->
IBIZA IV ST (6J8, 6P8) 03/2010 ->

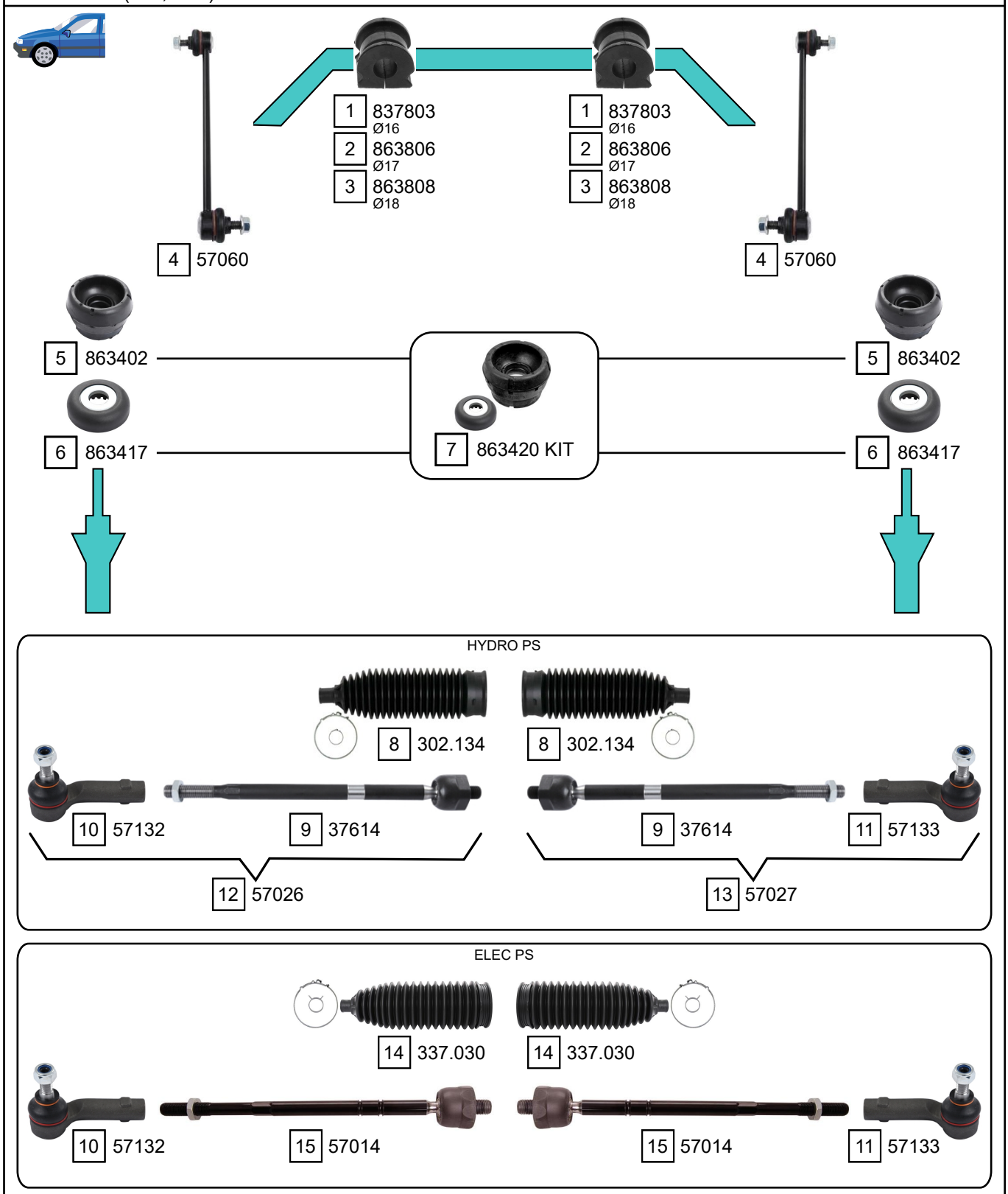

Ref.	Sidem Ref.	Description	OE-number	Measures	Ref.	Sidem Ref.	Description	OE-number	Measures
1	837803	stabiliser mounting	6Q0 411 314 P	di:16	9	37614	axial joint	Part of	th:MM14x1.5R L:313
2	863806	stabiliser mounting	6Q0 411 314 Q	di:17	10	57132	tie rod end left	6R0 423 811	c:13.4 th:FM14x1.5R
3	863808	stabiliser mounting	6Q0 411 314 R	di:18	11	57133	tie rod end right	6R0 423 812	c:13.4 th:FM14x1.5R
4	57060	stabiliser link	6R0 411 315	L:270	12	57026	tie rod left	6R0 423 803 A	c:13.4
5	863402	strut mount	1J0 412 331 C	di:26 do:82 L:53	13	57027	tie rod right	6R0 423 804 A	c:13.4
6	863417	bearing	1J0 412 249	di:14.3 do:45.3 L:13.4	14	337.030	steering rack gaiter	6C0 423 831 B	D:51 d:13.5 L:191
7	863420 KIT	strut mount kit	1J0 412 331 C S1	di:26 do:82 L:53	15	57014	axial joint	6C0 423 810 C	th:MM14X1.5R L:312
8	302.134	steering rack gaiter	6Q0 423 831 D	D:48 d:14 L:205					

Copyright 2021

SEAT
IBIZA

IBIZA IV (6J5, 6P1)	03/2008 ->
IBIZA IV SPORTCOUPE (6J1, 6P5)	07/2008 ->
IBIZA IV ST (6J8, 6P8)	03/2010 ->

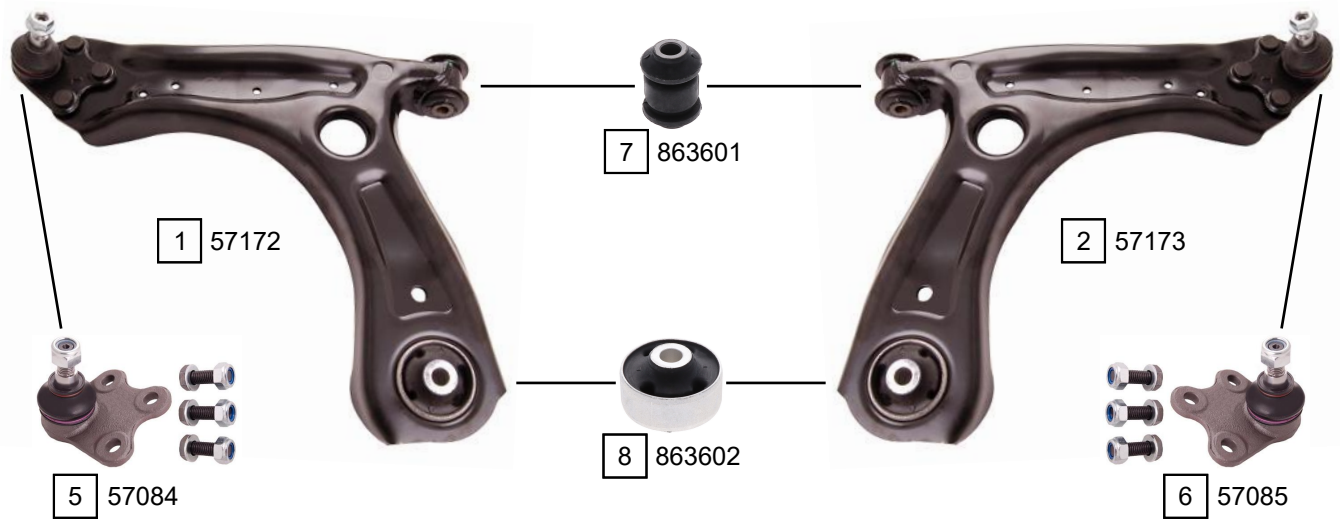

Ref.	Sidem Ref.	Description	OE-number	Measures	Ref.	Sidem Ref.	Description	OE-number	Measures
1	57172	TCA left wbj	6R0 407 151 F	c:14.9	6	57085	ball joint right	6R0 407 366 A	c:14.9
2	57173	TCA right wbj	6R0 407 152 F	c:14.9	7	863601	silentblock for TCA	357 407 182	di:12 do:32.6 (*)
3	57174	TCA left wbj	6R0 407 151 B	c:14.9	8	863602	silentblock for TCA	1J0 407 181	di:13 do:60 (*)
4	57175	TCA right wbj	6R0 407 152 B	c:14.9	9	837619	silentblock for TCA	8N0 407 181 B	di:13.2 do:60.2 (*)
5	57084	ball joint left	6R0 407 365 A	c:14.9					

Copyright 2021

IBIZA IV (6J5, 6P1)	03/2008 ->
IBIZA IV SPORTCOUPE (6J1, 6P5)	07/2008 ->
IBIZA IV ST (6J8, 6P8)	03/2010 ->

1 863502

1 863502

3 863720
Ø70
-> 09/2010

2 863704
Ø72

2 863704
Ø72

3 863720
Ø70
-> 09/2010

5 837724
Ø70
09/2010 ->

4 863718
Ø72
08/2010 ->

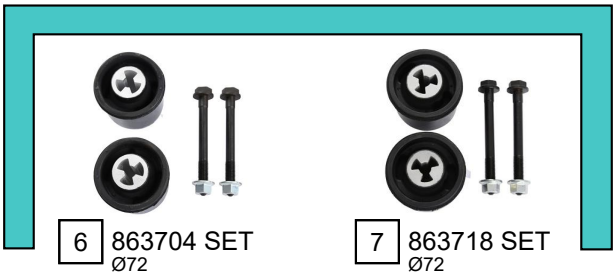

6 863704 SET
Ø72

7 863718 SET
Ø72
08/2010 ->

4 863718
Ø72
08/2010 ->

5 837724
Ø70
09/2010 ->

Ref.	Sidem Ref.	Description	OE-number	Measures	Ref.	Sidem Ref.	Description	OE-number	Measures
1	863502	strut mount	6R0 513 353	di:11.1 do:62 L:58.8	5	837724	mounting axle body	6R0 501 541 C	di:12.1 do:70
2	863704	mounting axle body	1J0 501 541 C	di:12 do:71.5	6	863704 SET	mounting axle body set	1J0 501 541 C S1	do:71.5
3	863720	mounting axle body	6Q0 501 541 E	di:12.1 do:70	7	863718 SET	mounting axle body set	6R0 501 541 A S1	di:12 do:71.6
4	863718	mounting axle body	6R0 501 541 A	do:71.6					

Copyright 2021

SEAT
IBIZA

IBIZA V (KJ1) 01/2017 ->

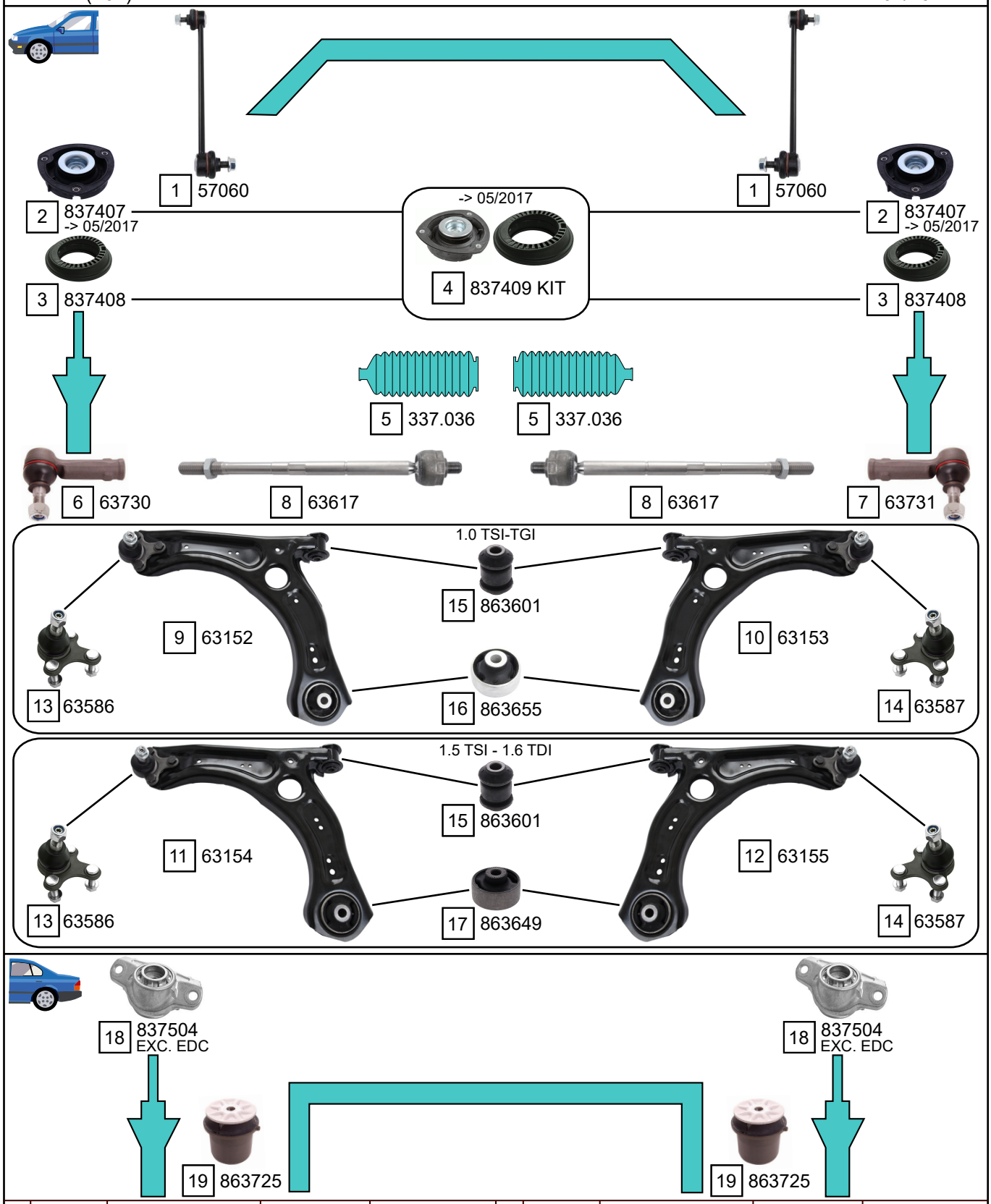

Ref.	Sidem Ref.	Description	OE-number	Measures	Ref.	Sidem Ref.	Description	OE-number	Measures
1	57060	stabiliser link	6R0 411 315	L:270	11	63154	TCA left wbj	2Q0 407 151 C S1	c:15.4
2	837407	strut mount	5Q0 412 331 E	di:14.6 do:64.1 L:42	12	63155	TCA right wbj	2Q0 407 152 C S1	c:15.4
3	837408	bearing	5Q0 412 249 F	di:74 do:127 L:38.6	13	63586	ball joint left	1K0 407 365 C	c:15.4
4	837409 KIT	strut mount kit	5Q0 412 331 E S1	di:14.6 do:127	14	63587	ball joint right	1K0 407 366 C	c:15.4
5	337.036	steering rack gaiter	2Q0 423 831	D:54.5 d:14.5 L:192	15	863601	silentblock for TCA	357 407 182	di:12 do:32.6 (*)
6	63730	tie rod end left	1K0 423 811 J S1	c:13.2 th:FM16x1.5R	16	863655	silentblock for TCA	2Q0 407 183 B	di:12.9 do:60.5 (*)
7	63731	tie rod end right	1K0 423 812 J S1	c:13.2 th:FM16x1.5R	17	863649	silentblock for TCA	5Q0 407 183 E	di:12.9 do:65 (*)
8	63617	axial joint	2Q0 423 810 D	th:MM14X1.5R L:315	18	837504	strut mount	5Q0 513 353 H	di:11.2 do:56.5 L:60.7
9	63152	TCA left wbj	2Q0 407 151 D S1	c:15.4	19	863725	mounting axle body	5Q0 501 541 C	di:12.5 do:72
10	63153	TCA right wbj	2Q0 407 152 D S1	c:15.4					

Copyright 2021

INCA (6K9) 11/1995 - 06/2003

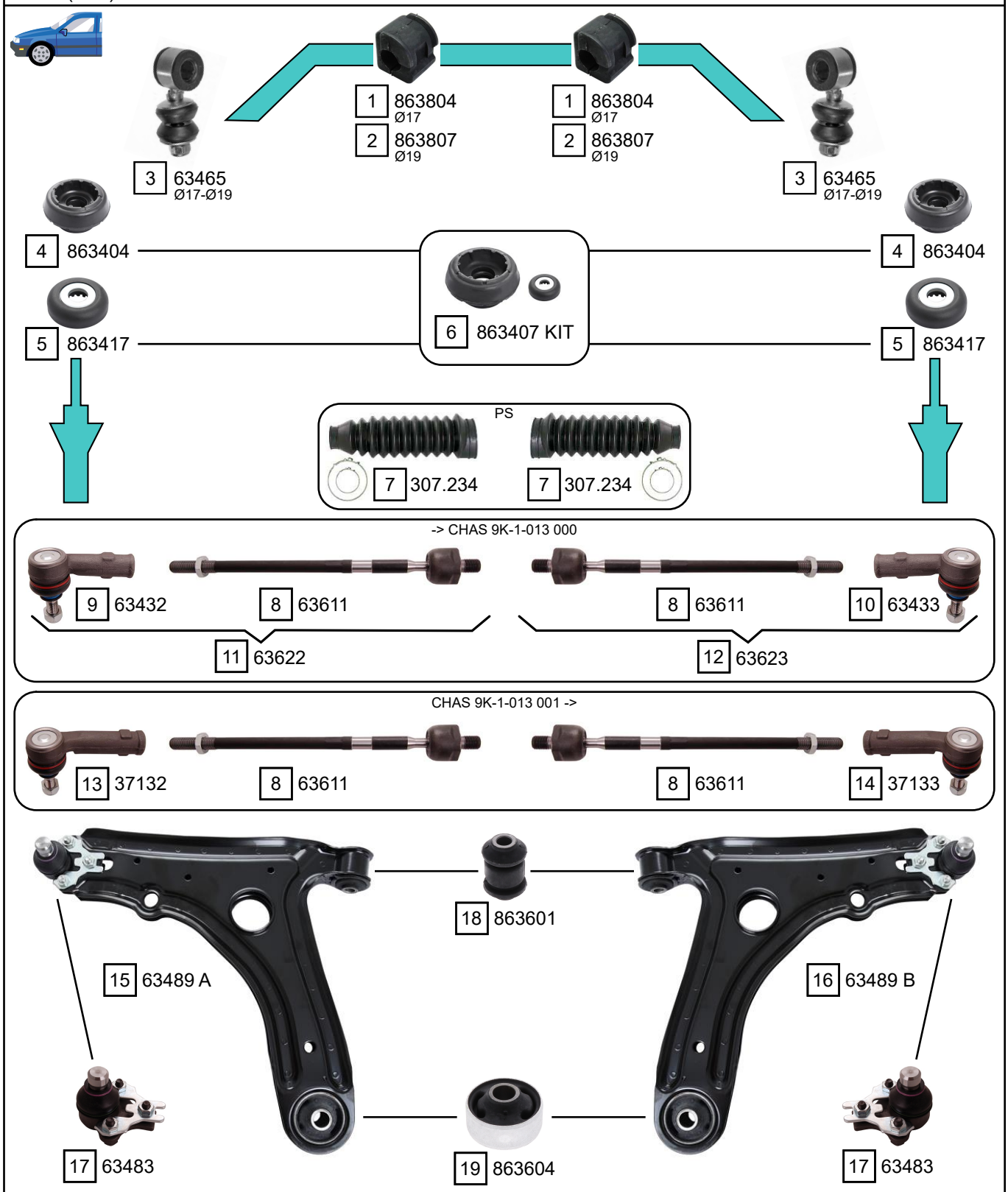

Ref.	Sidem Ref.	Description	OE-number	Measures	Ref.	Sidem Ref.	Description	OE-number	Measures
1	863804	stabiliser mounting	191 411 314	di:17	11	63622	tie rod left	6K0 422 803 D	c:12.6
2	863807	stabiliser mounting	1H0 411 314	di:19	12	63623	tie rod right	6K0 422 804 D	c:12.6
3	63465	stabiliser link	6K0 411 315	L:78	13	37132	tie rod end	6X0 422 811	c:12.7 th:FM14X1.5R
4	863404	strut mount	7M0 412 331	di:26.5 do:96.7 L:50	14	37133	tie rod end	6X0 422 812	c:12.7 th:FM14X1.5R
5	863417	bearing	1J0 412 249	di:14.3 do:45.3 L:13.4	15	63489 A	TCA left wbj	191 407 151 B S1	c:19
6	863407 KIT	strut mount kit	7M0 412 331 S1	di:14.3 do:98 L:50	16	63489 B	TCA right wbj	191 407 151 B S2	c:19
7	307.234	steering rack gaiter	1H0 422 831 B	D:41 d:10 L:210	17	63483	ball joint lower	357 407 365 A	c:19
8	63611	axial joint	Part of	th:MM14X1.5R L:319	18	863601	silentblock for TCA	357 407 182	di:12 do:32.6 (*)
9	63432	tie rod end left	6N0 419 811	c:12.6 th:FM14x1.5R	19	863604	silentblock for TCA	191 407 181 D	di:17 do:60.1 (*)
10	63433	tie rod end right	6N0 422 812	c:12.6 th:FM14x1.5R					

Copyright 2021

SEAT
LEON

LEON (1M1) 11/1999 - 08/2005

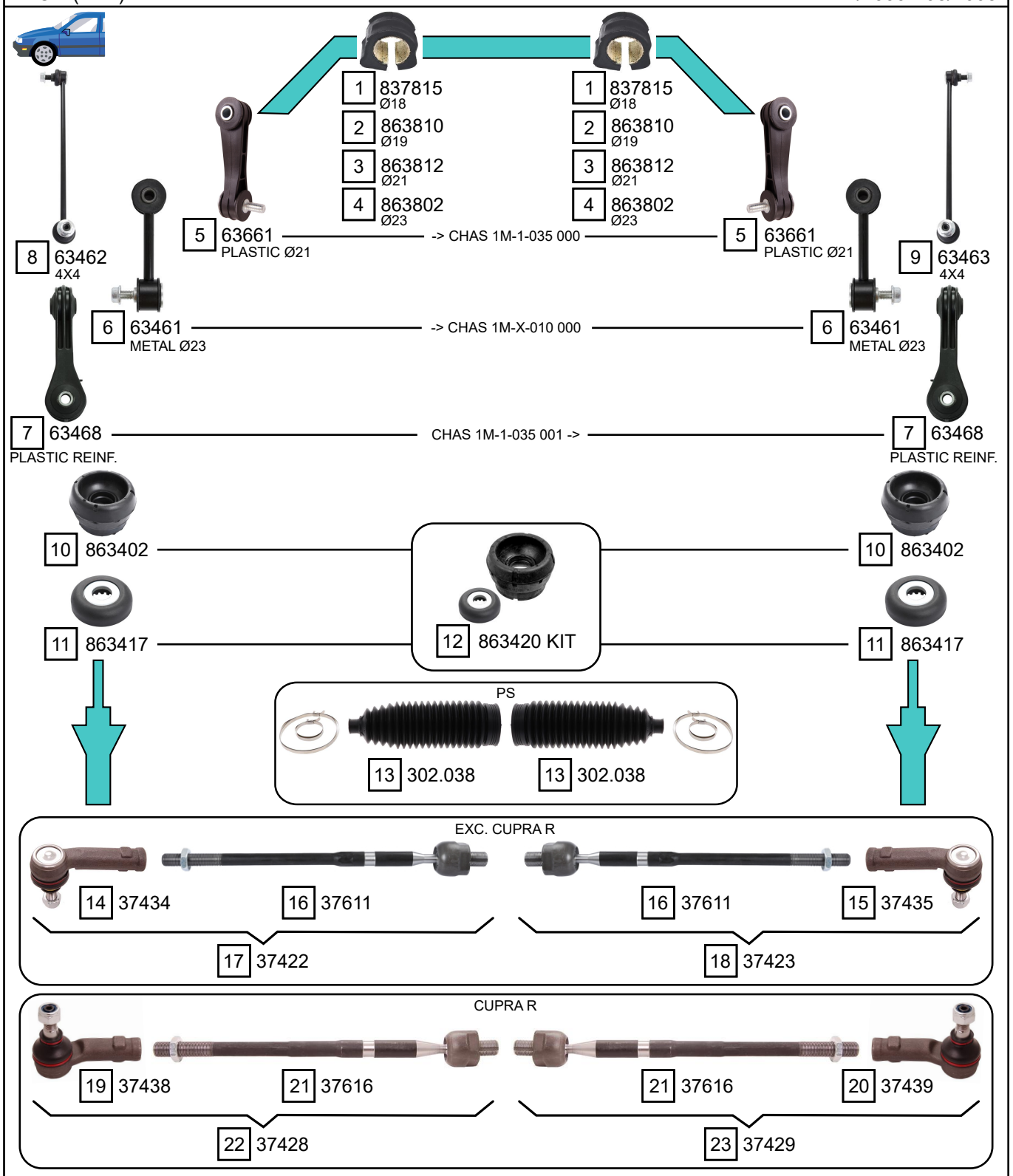

Ref.	Sidem Ref.	Description	OE-number	Measures	Ref.	Sidem Ref.	Description	OE-number	Measures
1	837815	stabiliser mounting	1J0 411 314 AC	di:18	13	302.038	steering rack gaiter	1J0 422 831 B	D:50 d:15 L:186
2	863810	stabiliser mounting	1J0 411 314 R	di:19	14	37434	tie rod end left	1J0 422 811 B	c:13.2 th:FM14x1.5R
3	863812	stabiliser mounting	1J0 411 314 T	di:21	15	37435	tie rod end right	1J0 422 812 B	c:13.2 th:FM14x1.5R
4	863802	stabiliser mounting	1J0 411 314 G	di:23	16	37611	axial joint	Part of	th:MM16X1.5R L:319
5	63661	stabiliser link	1J0 411 315 J	L:105	17	37422	tie rod left	1J0 422 803 H	c:13.2
6	63461	stabiliser link	1J0 411 315 G	L:105	18	37423	tie rod right	1J0 422 804 H	c:13.2
7	63468	stabiliser link	1J0 411 315 K	L:105	19	37438	tie rod end left	8N0 422 811 A	c:13.4 th:FM16X1.5R
8	63462	stabiliser link left	1J0 411 315 D	L:336	20	37439	tie rod end right	8N0 422 812 A	c:13.4 th:FM16X1.5R
9	63463	stabiliser link right	1J0 411 316 D	L:336	21	37616	axial joint	Part of	th:MM16X1.5R L:333
10	863402	strut mount	1J0 412 331 C	di:26 do:82 L:53	22	37428	tie rod left	8N0 422 803 D	c:13.4 L:370
11	863417	bearing	1J0 412 249	di:14.3 do:45.3 L:13.4	23	37429	tie rod right	8N0 422 804 D	c:13.4 L:370
12	863420 KIT	strut mount kit	1J0 412 331 C S1	di:26 do:82 L:53					

Copyright 2021

LEON (1M1) 11/1999 - 08/2005

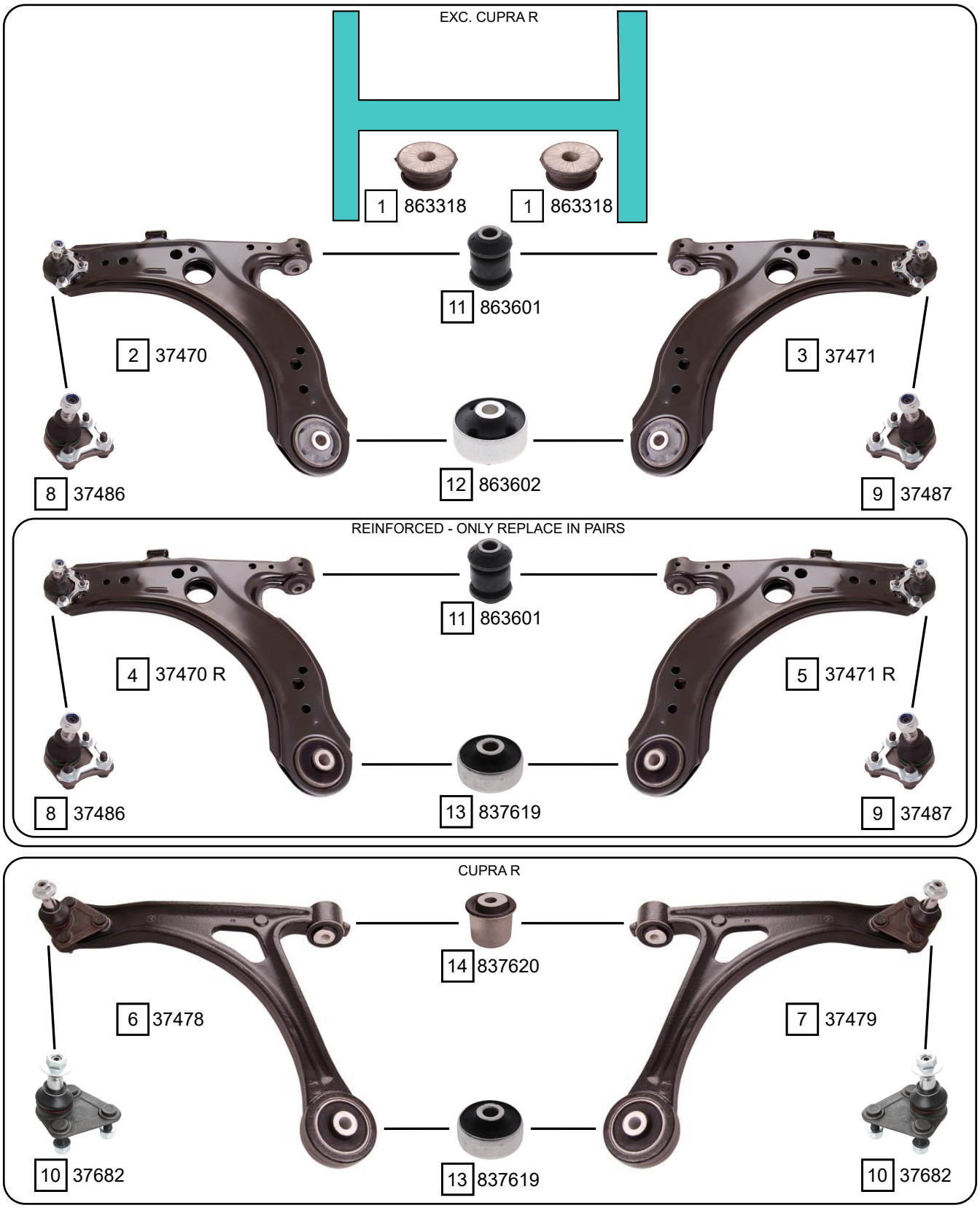

Ref.	Sidem Ref.	Description	OE-number	Measures	Ref.	Sidem Ref.	Description	OE-number	Measures
1	863318	mounting axle body	1J0 199 429	di:18.2 do:50.5	8	37486	ball joint left	1J0 407 365 J	c:14.9
2	37470	TCA left wbj	1J0 407 151 C S1	c:14.9	9	37487	ball joint right	1J0 407 366 J	c:14.9
3	37471	TCA right wbj	1J0 407 151 C S2	c:14.9	10	37682	ball joint	8N0 407 365 C	c:15.4
4	37470 R	TCA left wbj	1J0 407 151 C S1 R	c:14.9	11	863601	silentblock for TCA	357 407 182	di:12 do:32.6 (*)
5	37471 R	TCA right wbj	1J0 407 151 C S2 R	c:14.9	12	863602	silentblock for TCA	1J0 407 181	di:13 do:60 (*)
6	37478	TCA left wbj	1ML 407 151	c:15.4	13	837619	silentblock for TCA	8N0 407 181 B	di:13.2 do:60.2 (*)
7	37479	TCA right wbj	1ML 407 152	c:15.4	14	837620	silentblock for TCA	1ML 407 182	di:12.2 do:45.3 (*)

Copyright 2021

SEAT
LEON

LEON (1M1) 11/1999 - 08/2005

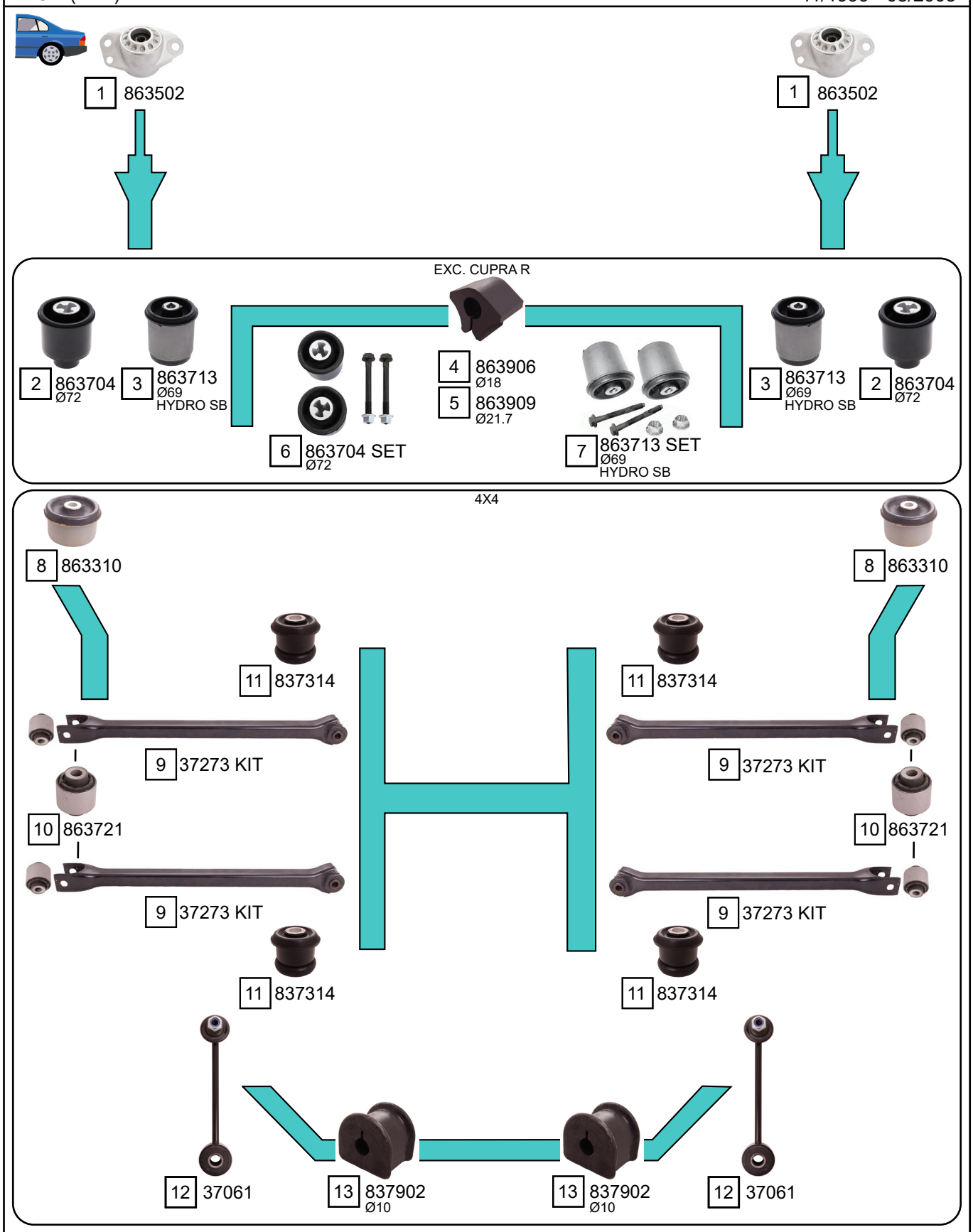

Ref.	Sidem Ref.	Description	OE-number	Measures	Ref.	Sidem Ref.	Description	OE-number	Measures
1	863502	strut mount	6R0 513 353	di:11.1 do:62 L:58.8	8	863310	mounting axle body	1J0 505 171 B	di:12 do:72
2	863704	mounting axle body	1J0 501 541 C	di:12 do:71.5	9	37273 KIT	track rod	1J0 505 323 L S1	L:517
3	863713	mounting axle body	1J0 501 541 D	di:13.2 do:69	10	863721	silentblock for TCA	1J0 505 203	di:12.3 do:43.6 (*)
4	863906	stabiliser mounting	871 511 423	di:16.5	11	837314	mounting axle body	1J0 505 145 B	di:16 do:51.6
5	863909	stabiliser mounting	1J0 511 423	di:18	12	37061	stabiliser link rear axle	1J0 505 466 B	L:175
6	863704 SET	mounting axle body set	1J0 501 541 C S1	do:71.5	13	837902	stabiliser mounting	8D0 511 327 C	di:10.5
7	863713 SET	mounting axle body set	1J0 501 541 D S1	do:69					

Copyright 2021

LEON (1P1) 09/2005 - 09/2012

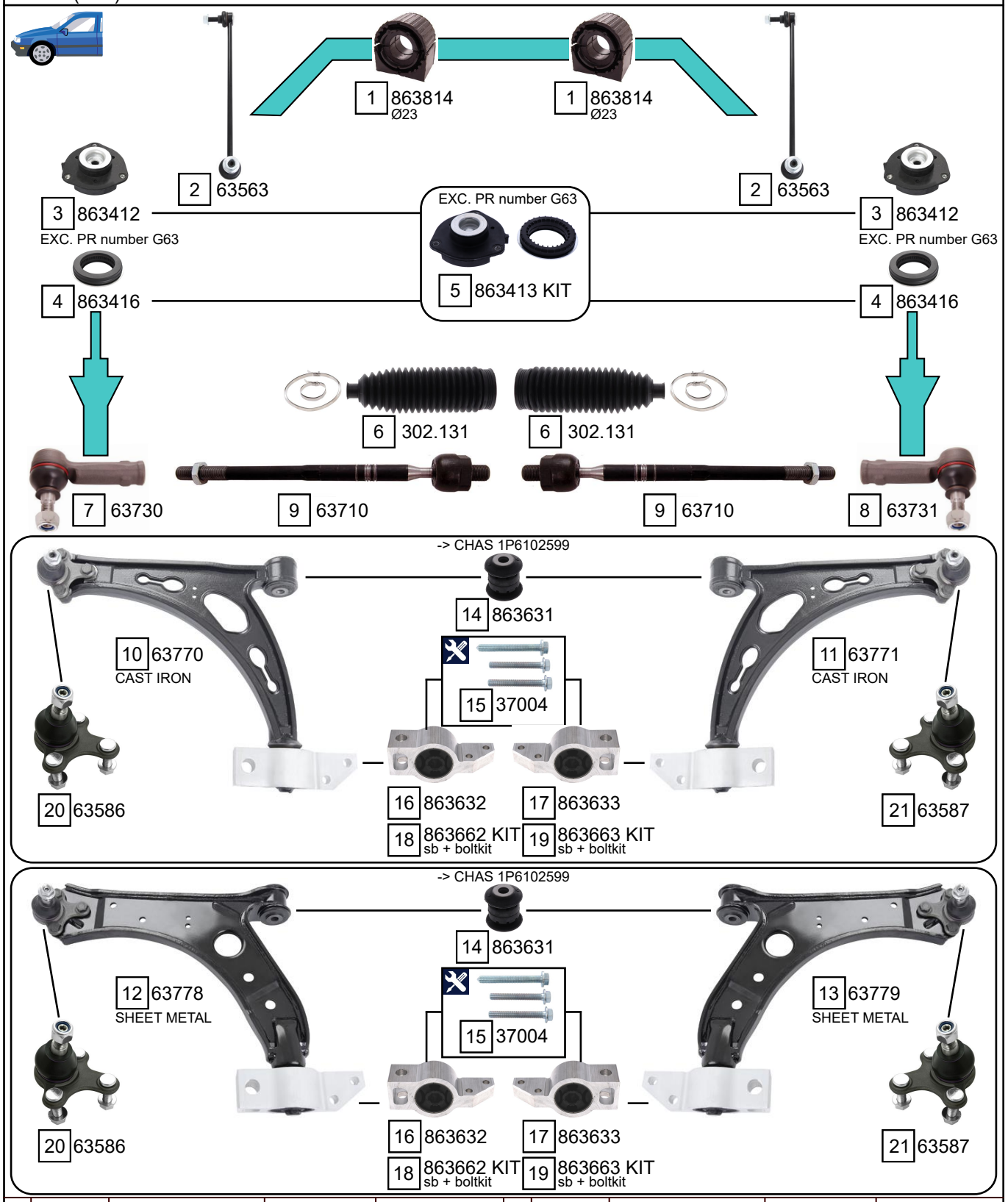

Ref.	Sidem Ref.	description	OE-number	measures	Ref.	Sidem Ref.	description	OE-number	measures
1	863814	stabiliser mounting	Part of	di:21	12	63778	TCA left wbj	1K0 407 151 AA S1	c:15.4
2	63563	stabiliser link	5Q0 411 315 A	L:335	13	63779	TCA right wbj	1K0 407 152 AA S2	c:15.4
3	863412	strut mount	1K0 412 331 B	di:14.2 L:49.5	14	863631	silentblock for TCA	1K0 407 182	di:12.1 do:40 (*)
4	863416	bearing	1K0 412 249 B	di:68.5 do:112 L:25.5	15	37004	mounting kit	N 910 398 02 S1	th:M10x1.5R
5	863413 KIT	strut mount kit	1K0 412 331 B S1	di:14.2 L:50	16	863632	silentblock for TCA	1K0 199 231 J	di:18.8 (*)
6	302.131	steering rack gaiter	1K0 423 831 A	D:50 d:15 L:193	17	863633	silentblock for TCA	1K0 199 232 J	di:18.8 (*)
7	63730	tie rod end left	1K0 423 811 J S1	c:13.2 th:FM16x1.5R	18	863662 KIT	silentblock kit	1K0 199 231 J S1	
8	63731	tie rod end right	1K0 423 812 J S1	c:13.2 th:FM16x1.5R	19	863663 KIT	silentblock kit	1K0 199 232 J S1	
9	63710	axial joint	1K0 423 810 A	th:MM16X1.5R L:312	20	63586	ball joint left	1K0 407 365 C	c:15.4
10	63770	TCA left wbj	1K0 407 151 AC	c:15.4	21	63587	ball joint right	1K0 407 366 C	c:15.4
11	63771	TCA right wbj	1K0 407 152 AC	c:15.4					

Copyright 2021

SEAT
LEON

LEON (1P1) 09/2005 - 09/2012

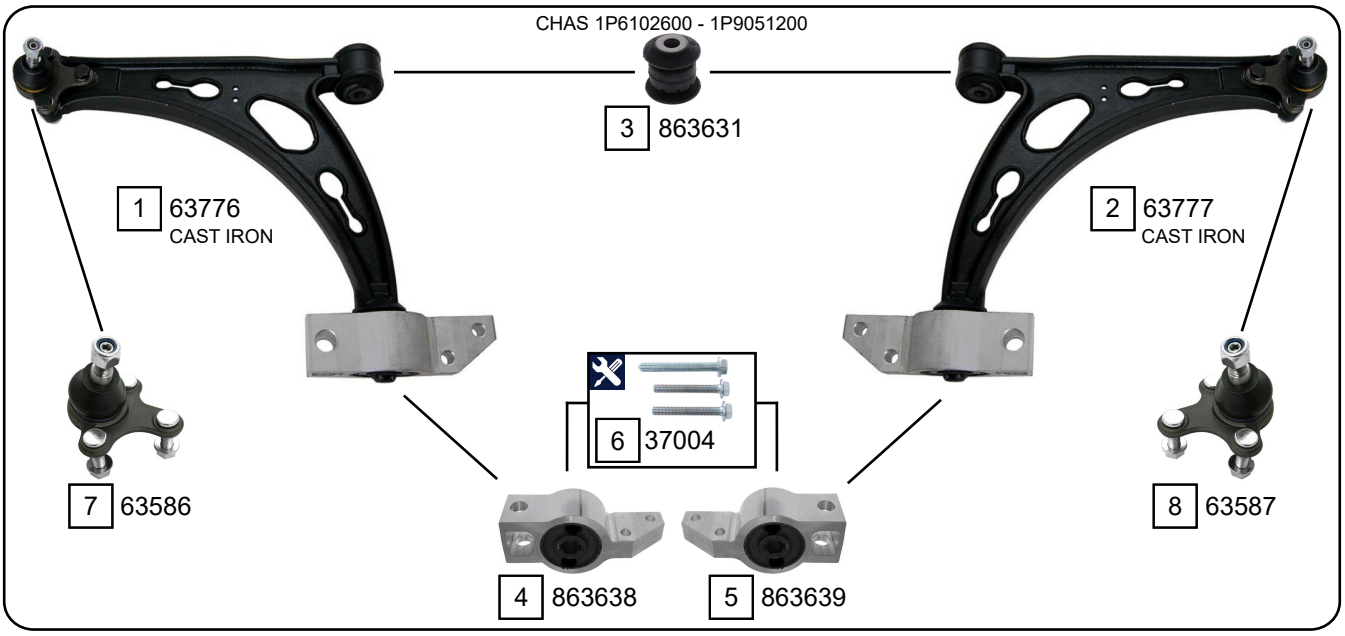

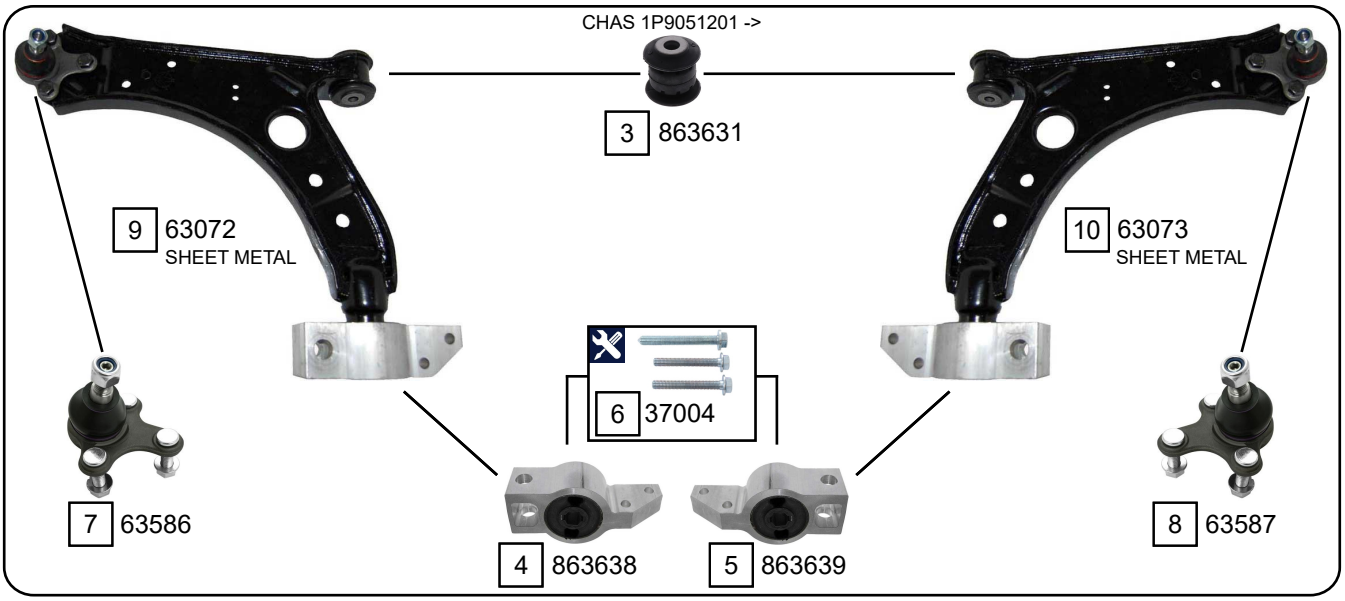

Ref.	Sidem Ref.	Description	OE-number	Measures	Ref.	Sidem Ref.	Description	OE-number	Measures
1	63776	TCA left wbj	1K0 407 151 AK	c:15.4	6	37004	mounting kit	N 910 398 02 S1	th:M10x1.5R
2	63777	TCA right wbj	1K0 407 152 AD	c:15.4	7	63586	ball joint left	1K0 407 365 C	c:15.4
3	863631	silentblock for TCA	1K0 407 182	di:12.1 do:40 (*)	8	63587	ball joint right	1K0 407 366 C	c:15.4
4	863638	silentblock for TCA	1K0 199 231 K	di:18.6 (*)	9	63072	TCA left wbj	1K0 407 151 AB	c:15.4
5	863639	silentblock for TCA	1K0 199 232 K	di:18.6 (*)	10	63073	TCA right wbj	1K0 407 152 AB	c:15.4

Copyright 2021

LEON (1P1) 09/2005 - 09/2012

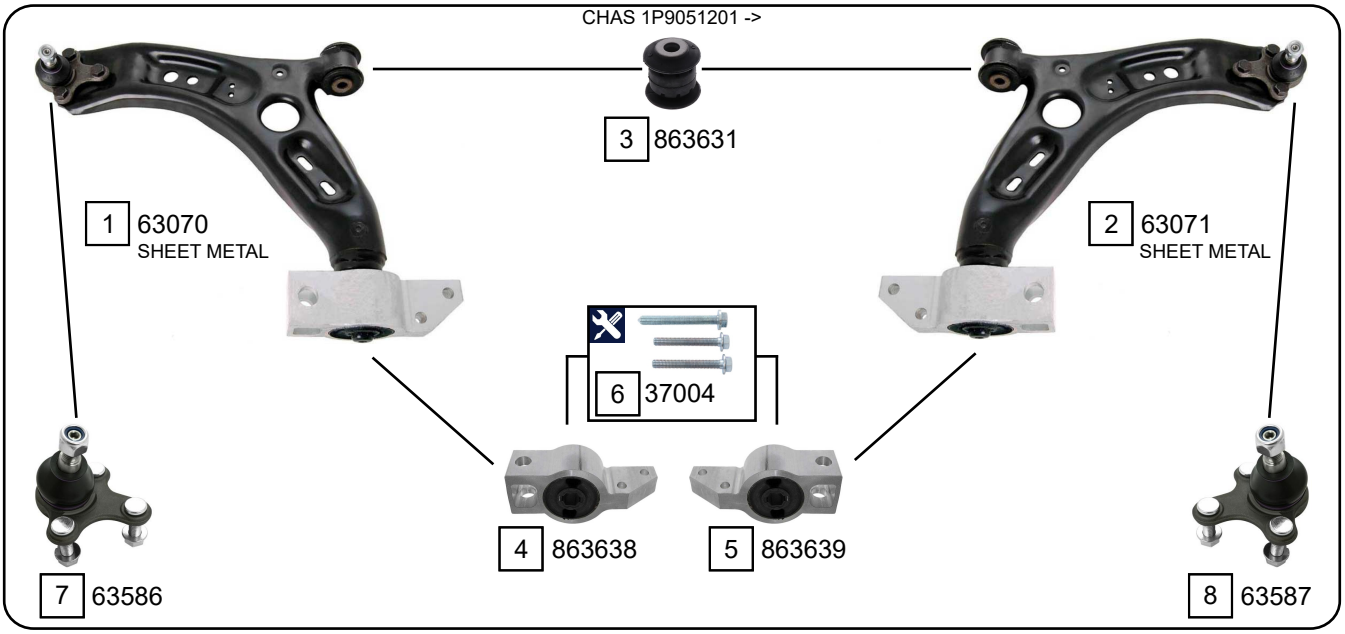

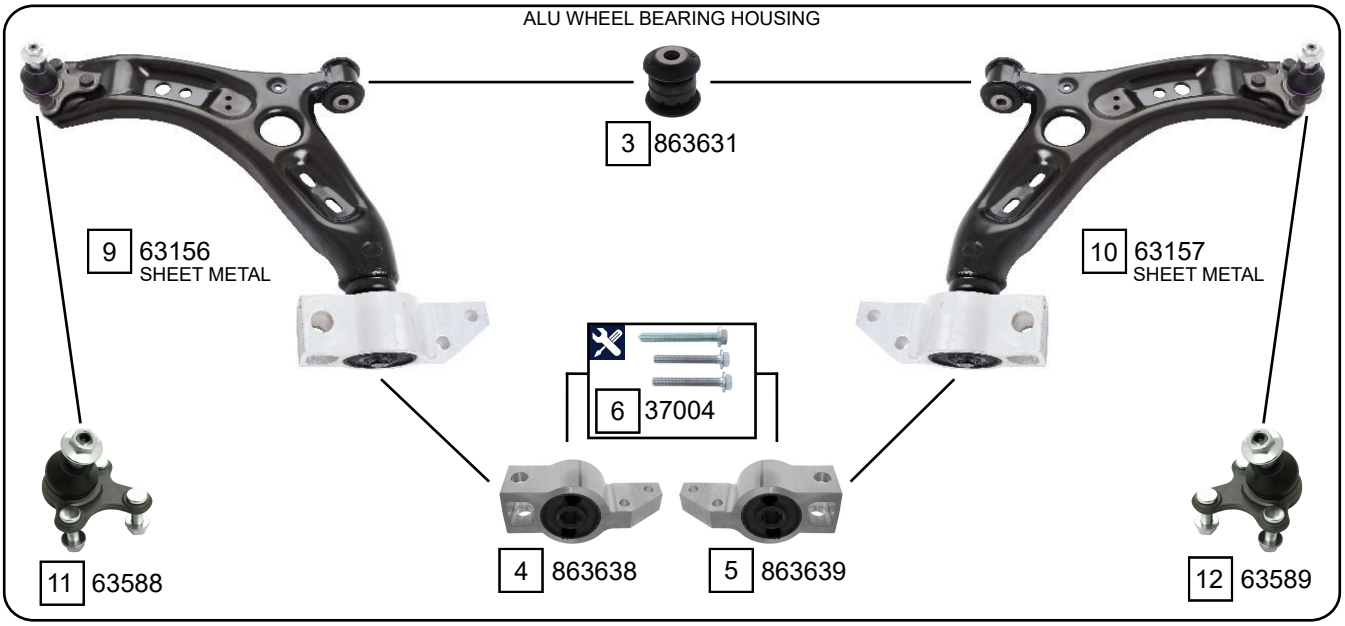

Ref.	Sidem Ref.	Description	OE-number	Measures	Ref.	Sidem Ref.	Description	OE-number	Measures
1	63070	TCA left wbj	1K0 407 151 BD S1	c:15.4	7	63586	ball joint left	1K0 407 365 C	c:15.4
2	63071	TCA right wbj	1K0 407 152 BD S1	c:15.4	8	63587	ball joint right	1K0 407 366 C	c:15.4
3	863631	silentblock for TCA	1K0 407 182	di:12.1 do:40 (*)	9	63156	TCA left wbj	1K0 407 151 BD S2	c:15.2
4	863638	silentblock for TCA	1K0 199 231 K	di:18.6 (*)	10	63157	TCA right wbj	1K0 407 152 BD S2	c:15.2
5	863639	silentblock for TCA	1K0 199 232 K	di:18.6 (*)	11	63588	ball joint left	3C0 407 365 B	c:15.2
6	37004	mounting kit	N 910 398 02 S1	th:M10x1.5R	12	63589	ball joint right	3C0 407 366 B	c:15.2

Copyright 2021

SEAT
LEON

LEON (1P1) 09/2005 - 09/2012

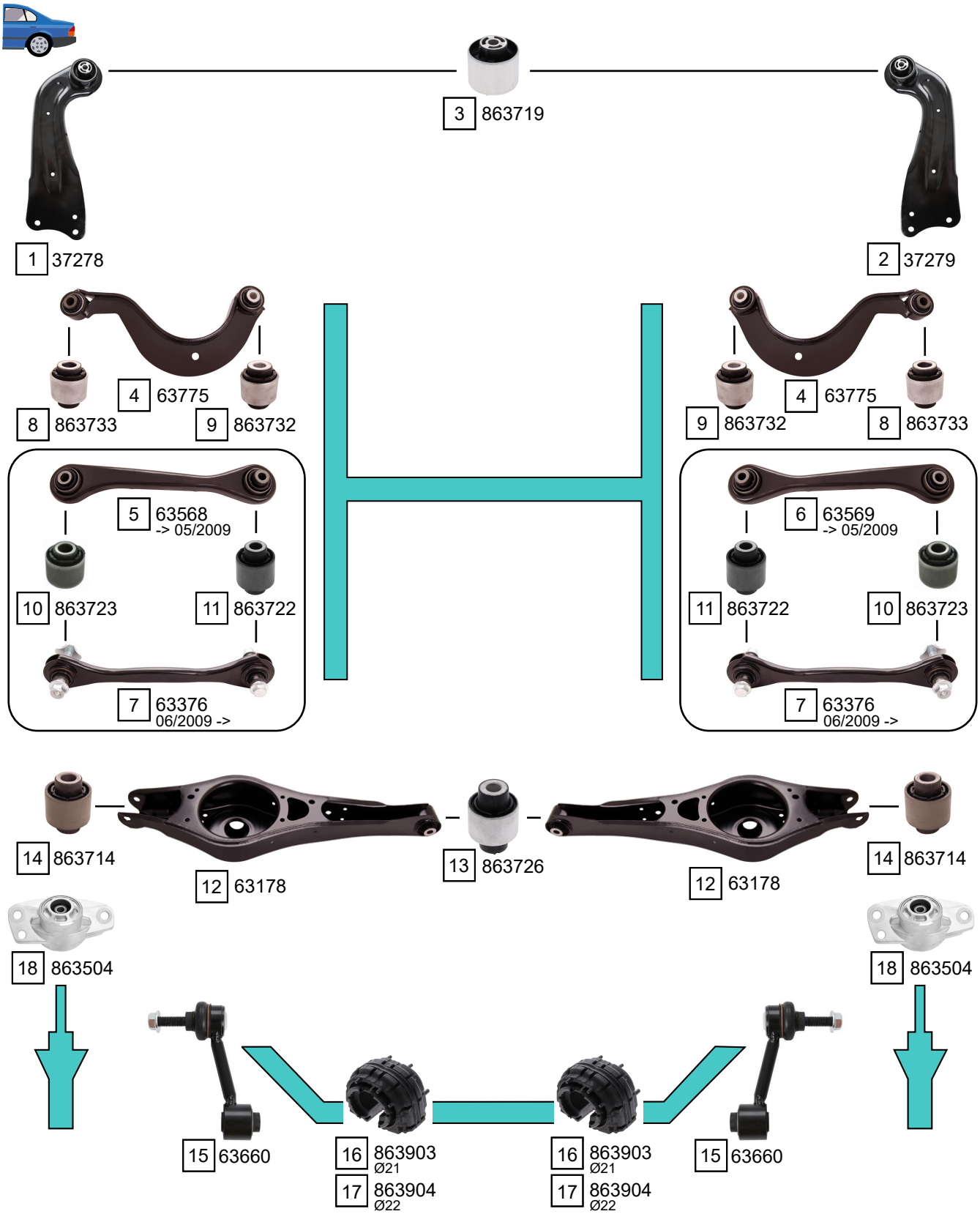

Ref.	Sidem Ref.	Description	OE-number	Measures	Ref.	Sidem Ref.	Description	OE-number	Measures
1	37278	TCA left	1K0 505 223 K	L:373	10	863723	silentblock for TCA	Part of	di:14.2 do:40.1 (*)
2	37279	TCA right	1K0 505 224 K	L:373	11	863722	silentblock for TCA	Part of	di:12.1 do:40.4 (*)
3	863719	mounting axle body	3C0 505 541	di:12.2 do:60.2 (*)	12	63178	TCA	1K0 505 311 AB	
4	63775	track rod	1K0 505 323 N	L:305.5	13	863726	silentblock for TCA	Part of	di:12.1 do:42 (*)
5	63568	track rod	1K0 501 529 F	L:298	14	863714	silentblock for TCA	1K0 505 553 A	di:12.2 do:37.4 (*)
6	63569	track rod	1K0 501 530 C	L:298	15	63660	stabiliser link rear axle	1K0 505 465 K	L:95
7	63376	track rod	1K0 501 529 H	L:298	16	863903	stabiliser mounting	1K0 511 327 AR	di:18.5
8	863733	silentblock for TCA	Part of	di:14.3 do:38.2 (*)	17	863904	stabiliser mounting	1K0 511 327 AS	di:19.5
9	863732	silentblock for TCA	Part of	di:12.1 do:38.3 (*)	18	863504	strut mount	1K0 513 353 G	di:10.5 do:63 L:62

Copyright 2021

LEON (5F1) 09/2012 ->
LEON SC (5F5) 01/2013 ->
LEON ST (5F8) 08/2013 ->

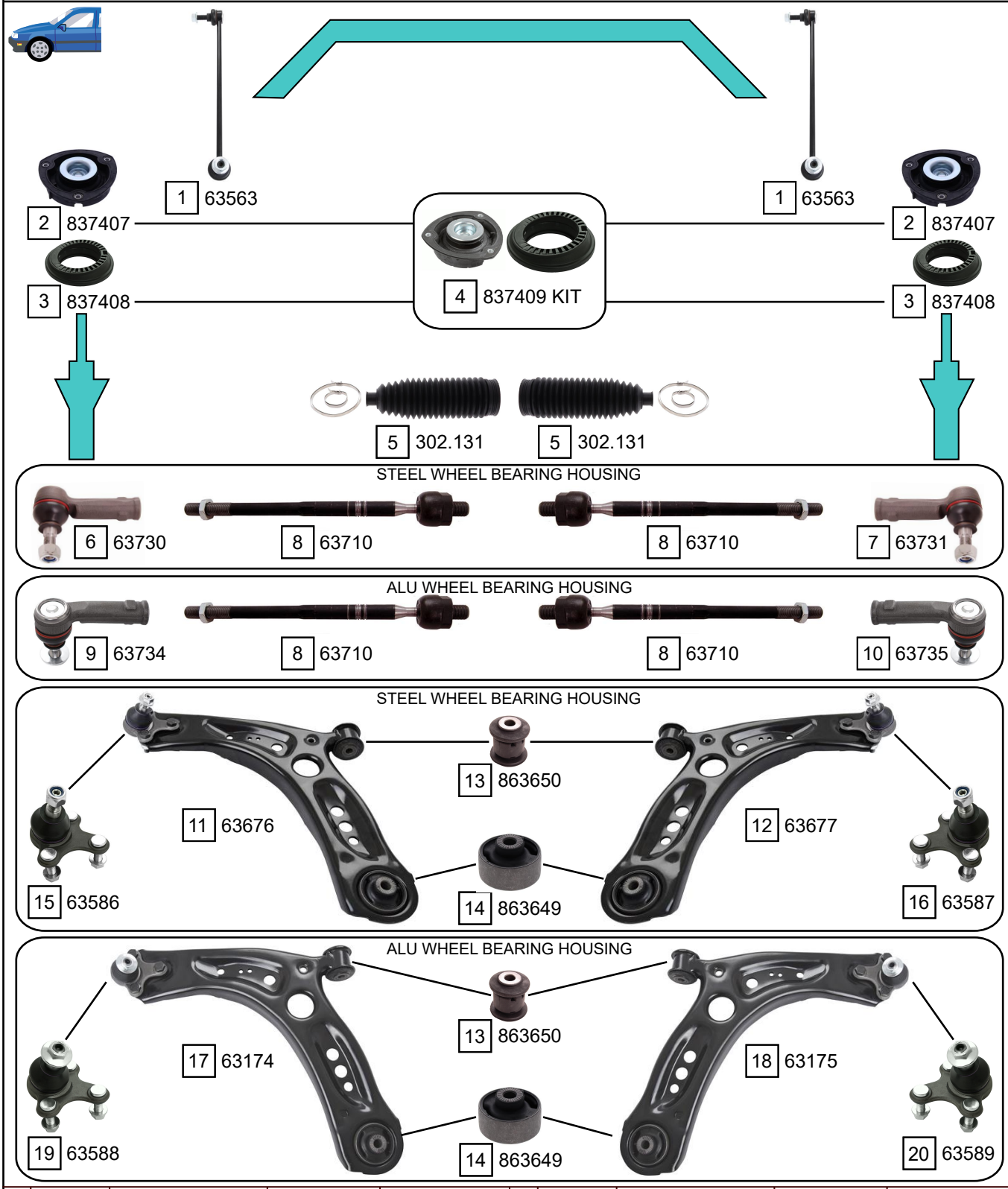

Ref.	Sidem Ref.	Description	OE-number	Measures	Ref.	Sidem Ref.	Description	OE-number	Measures
1	63563	stabiliser link	5Q0 411 315 A	L:335	11	63676	TCA left wbj	5Q0 407 151 L S1	c:15.4
2	837407	strut mount	5Q0 412 331 E	di:14.6 do:64.1 L:42	12	63677	TCA right wbj	5Q0 407 152 L S1	c:15.4
3	837408	bearing	5Q0 412 249 F	di:74 do:127 L:38.6	13	863650	silentblock for TCA	5Q0 407 182 A	di:12.1 do:40.1 (*)
4	837409 KIT	strut mount kit	5Q0 412 331 E S1	di:14.6 do:127	14	863649	silentblock for TCA	5Q0 407 183 E	di:12.9 do:65 (*)
5	302.131	steering rack gaiter	1K0 423 831 A	D:50 d:15 L:193	15	63586	ball joint left	1K0 407 365 C	c:15.4
6	63730	tie rod end left	1K0 423 811 J S1	c:13.2 th:FM16x1.5R	16	63587	ball joint right	1K0 407 366 C	c:15.4
7	63731	tie rod end right	1K0 423 812 J S1	c:13.2 th:FM16x1.5R	17	63174	TCA left wbj	5Q0 407 151 L S2	c:15.2
8	63710	axial joint	1K0 423 810 A	th:MM16X1.5R L:312	18	63175	TCA right wbj	5Q0 407 152 L S2	c:15.2
9	63734	tie rod end left	1K0 423 811 J S2	c:13.2 th:FM16X1.5R	19	63588	ball joint left	3C0 407 365 B	c:15.2
10	63735	tie rod end right	1K0 423 812 J S2	c:13.2 th:FM16X1.5R	20	63589	ball joint right	3C0 407 366 B	c:15.2

Copyright 2021

SEAT
LEON

SIDEM
Experts know why

LEON (5F1) 09/2012 ->
LEON SC (5F5) 01/2013 ->
LEON ST (5F8) 08/2013 ->

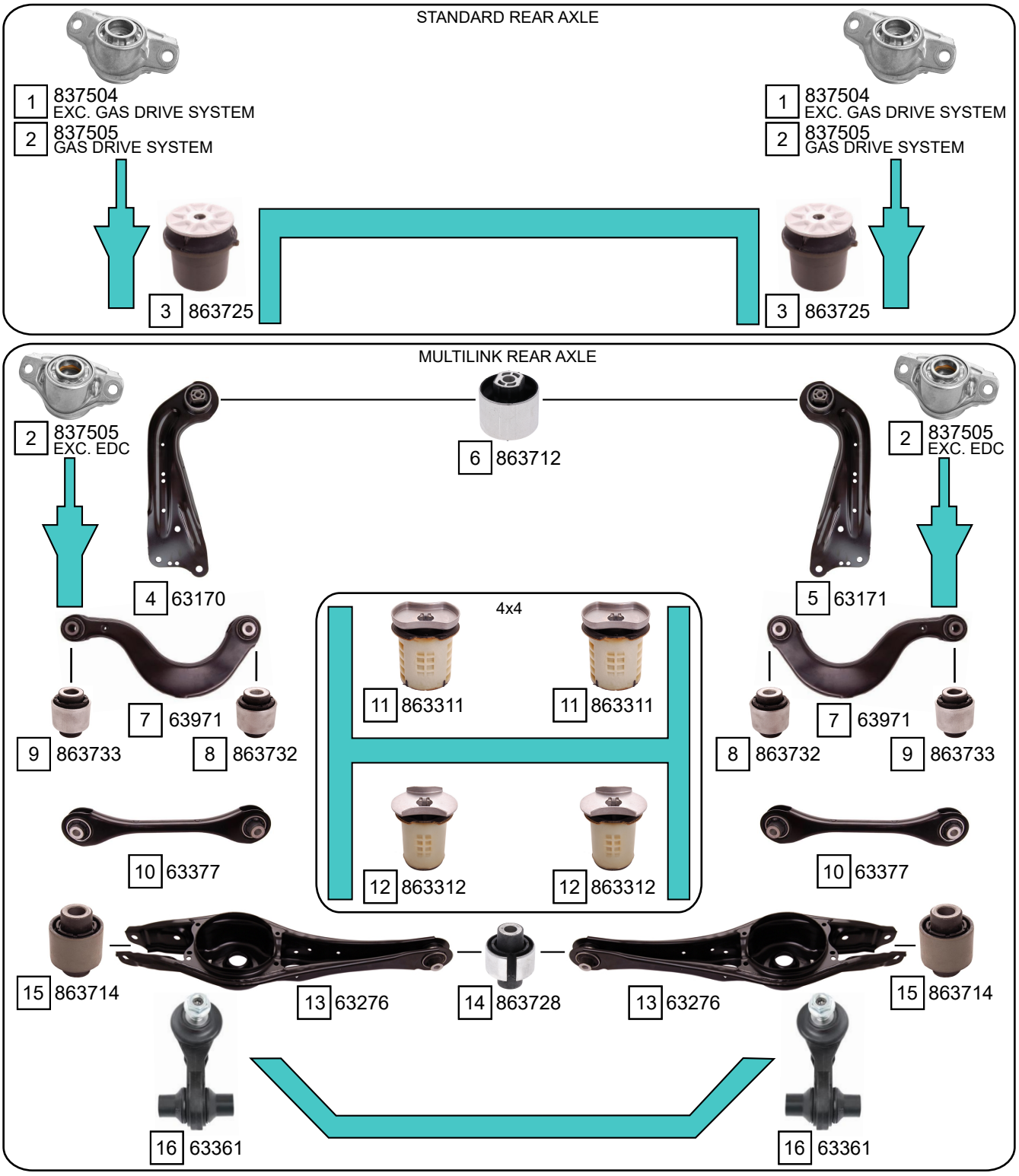

Ref.	Sidem Ref.	Description	OE-number	Measures	Ref.	Sidem Ref.	Description	OE-number	Measures
1	837504	strut mount	5Q0 513 353 H	di:11.2 do:56.5 L:60.7	9	863733	silentblock for TCA	Part of	di:14.3 do:38.2 (*)
2	837505	strut mount	5Q0 513 353 G	di:10.2 do:65.8 L:63.3	10	63377	track rod	5Q0 501 529 F	L:282
3	863725	mounting axle body	5Q0 501 541 C	di:12.5 do:72	11	863311	mounting axle body	5Q0 505 145 F	di:18.2 do:61.5
4	63170	TCA left	5Q0 505 223 D	L:384	12	863312	mounting axle body	5Q0 505 145 E	di:18.6 do:53.5
5	63171	TCA right	5Q0 505 224 D	L:384	13	63276	TCA	5Q0 505 311 D	
6	863712	silentblock for TCA	1K0 505 541 B	di:12.2 do:60.2 (*)	14	863728	silentblock for TCA	Part of	di:12 do:44.3 (*)
7	63971	track rod	5Q0 505 323 C	L:305	15	863714	silentblock for TCA	1K0 505 553 A	di:12.2 do:37.4 (*)
8	863732	silentblock for TCA	Part of	di:12.1 do:38.3 (*)	16	63361	stabiliser link rear axle	5Q0 505 465 A	L:70

Copyright 2021

LEON (KL1)
LEON ST (KL8)

11/2019 ->
03/2020 ->

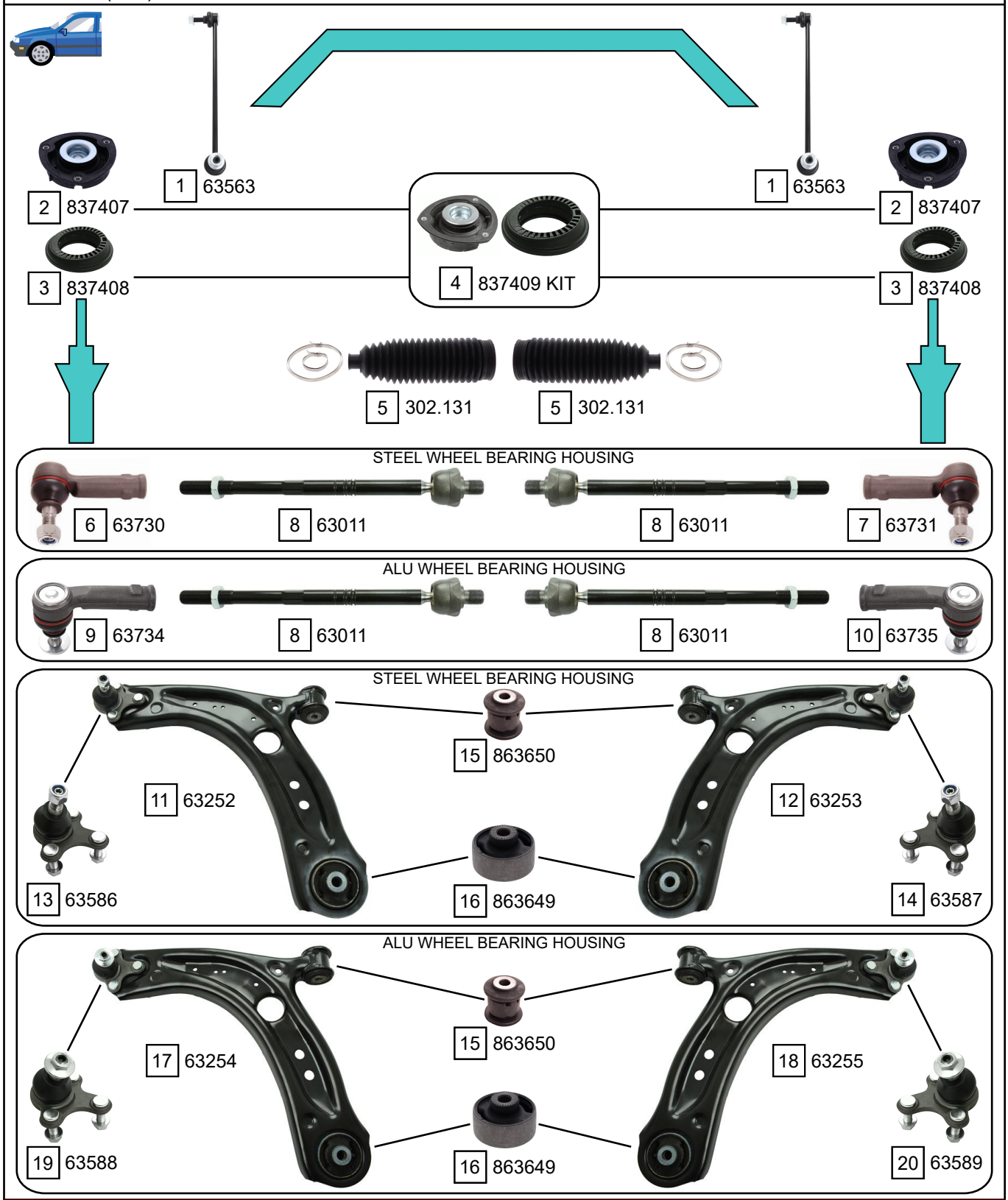

Ref.	Sidem Ref.	Description	OE-number	Measures	Ref.	Sidem Ref.	Description	OE-number	Measures
1	63563	stabiliser link	5Q0 411 315 A	L:335	12	63253	TCA right wbj	5WA 407 152 A S1	c:15.4
2	837407	strut mount	5Q0 412 331 E	di:14.6 do:64.1 L:42	13	63586	ball joint left	1K0 407 365 C	c:15.4
3	837408	bearing	5Q0 412 249 F	di:74 do:127 L:38.6	14	63587	ball joint right	1K0 407 366 C	c:15.4
4	837409 KIT	strut mount kit	5Q0 412 331 E S1	di:14.6 do:127	15	863650	silentblock for TCA	5Q0 407 182 A	di:12.1 do:40.1 (*)
5	302.131	steering rack gaiter	1K0 423 831 A	D:50 d:15 L:193	16	863649	silentblock for TCA	5Q0 407 183 E	di:12.9 do:65 (*)
6	63730	tie rod end left	1K0 423 811 J S1	c:13.2 th:FM16x1.5R	17	63254	TCA left wbj	5WA 407 151 A S2	c:15.2
7	63731	tie rod end right	1K0 423 812 J S1	c:13.2 th:FM16x1.5R	18	63255	TCA right wbj	5WA 407 152 A S2	c:15.2
9	63734	tie rod end left	1K0 423 811 J S2	c:13.2 th:FM16X1.5R	19	63588	ball joint left	3C0 407 365 B	c:15.2
10	63735	tie rod end right	1K0 423 812 J S2	c:13.2 th:FM16X1.5R	20	63589	ball joint right	3C0 407 366 B	c:15.2
11	63252	TCA left wbj	5WA 407 151 A S1	c:15.4					

Copyright 2021

SEAT
LEON

LEON (KL1)
LEON ST (KL8)

11/2019 ->
03/2020 ->

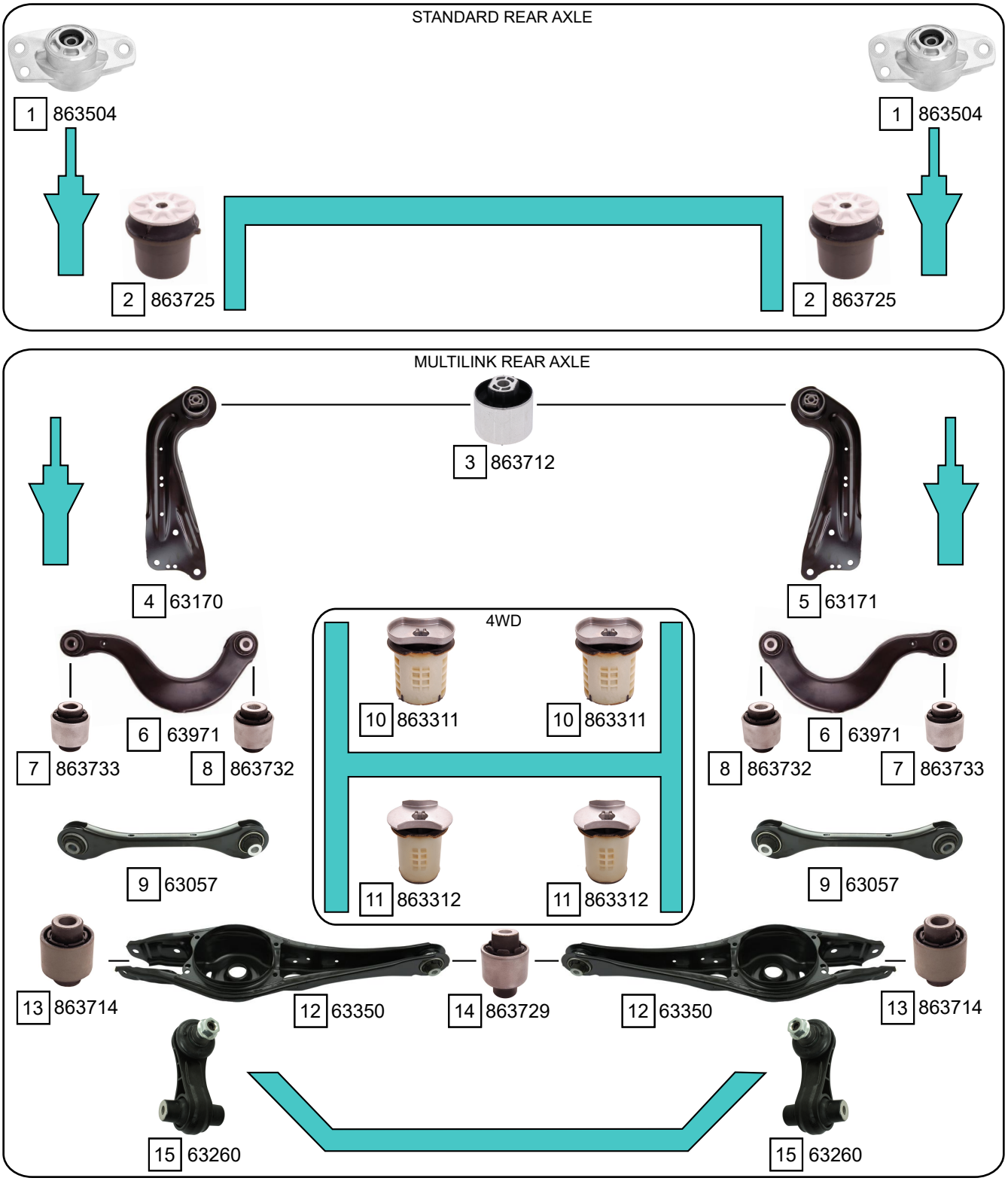

Ref.	Sidem Ref.	Description	OE-number	Measures	Ref.	Sidem Ref.	Description	OE-number	Measures
1	863504	strut mount	1K0 513 353 G	di:10.5 do:63 L:62	9	63057	track rod	5Q0 501 529 G	L:282
2	863725	mounting axle body	5Q0 501 541 C	di:12.5 do:72	10	863311	mounting axle body	5Q0 505 145 F	di:18.2 do:61.5
3	863712	silentblock for TCA	1K0 505 541 B	di:12.2 do:60.2 (*)	11	863312	mounting axle body	5Q0 505 145 E	di:18.6 do:53.5
4	63170	TCA left	5Q0 505 223 D	L:384	12	63350	TCA	5WA 505 311 A	
5	63171	TCA right	5Q0 505 224 D	L:384	13	863714	silentblock for TCA	1K0 505 553 A	di:12.2 do:37.4 (*)
6	63971	track rod	5Q0 505 323 C	L:305	14	863729	silentblock for TCA	Part of	di:12.1 do:44.3 (*)
7	863733	silentblock for TCA	Part of	di:14.3 do:38.2 (*)	15	63260	stabiliser link rear axle	5WA 505 465 A	L:70
8	863732	silentblock for TCA	Part of	di:12.1 do:38.3 (*)					

Copyright 2021

MALAGA (023A) 11/1984 - 12/1993

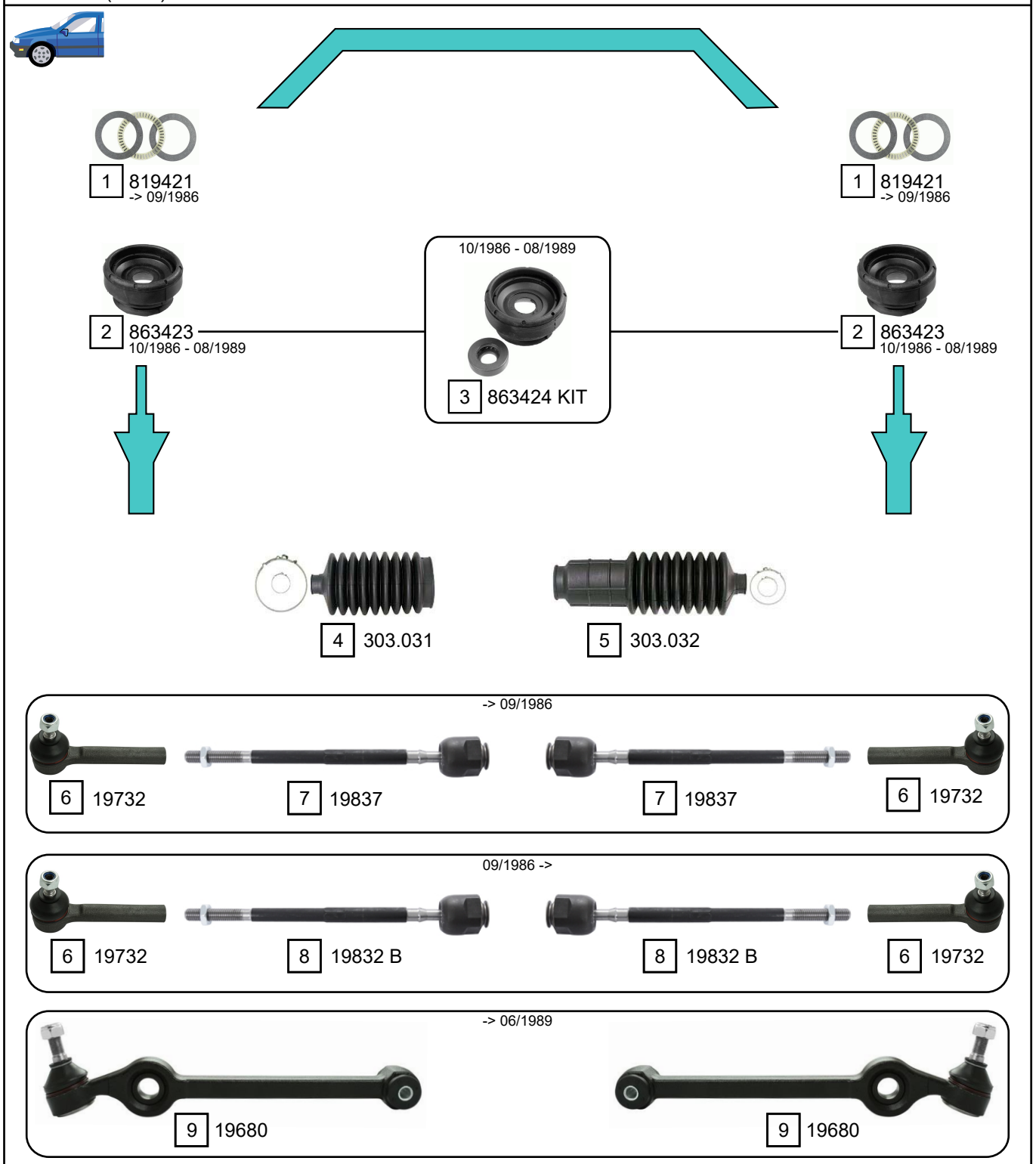

Ref.	Sidem Ref.	Description	OE-number	Measures	Ref.	Sidem Ref.	Description	OE-number	Measures
1	819421	bearing	Part of	di:50 do:70 L:3.6	6	19732	tie rod end	SE 022 162 406 A	c:12 th:FM12X1.5R
2	863423	strut mount	SE 021 156 228 A	do:75.5 L:40	7	19837	axial joint	SE 022 162 449 A	th:FM14X1.5R L:278
3	863424 KIT	strut mount kit	SE 021 156 228 A S1	di:21.2 do:76.5 L:40.5	8	19832 B	axial joint	SE 022 162 449 B	th:FM14X1.5R L:280
4	303.031	steering rack gaiter	SE 138 162 131 A	D:42 d:10 L:125	9	19680	TCA wbj	SE 138 156 110 A	c:13
5	303.032	steering rack gaiter	SE 138 162 132 A	D:26 d:10 L:165					

Copyright 2021

SEAT
MARBELLA

MARBELLA (28/028A) 08/1986 - 10/1998

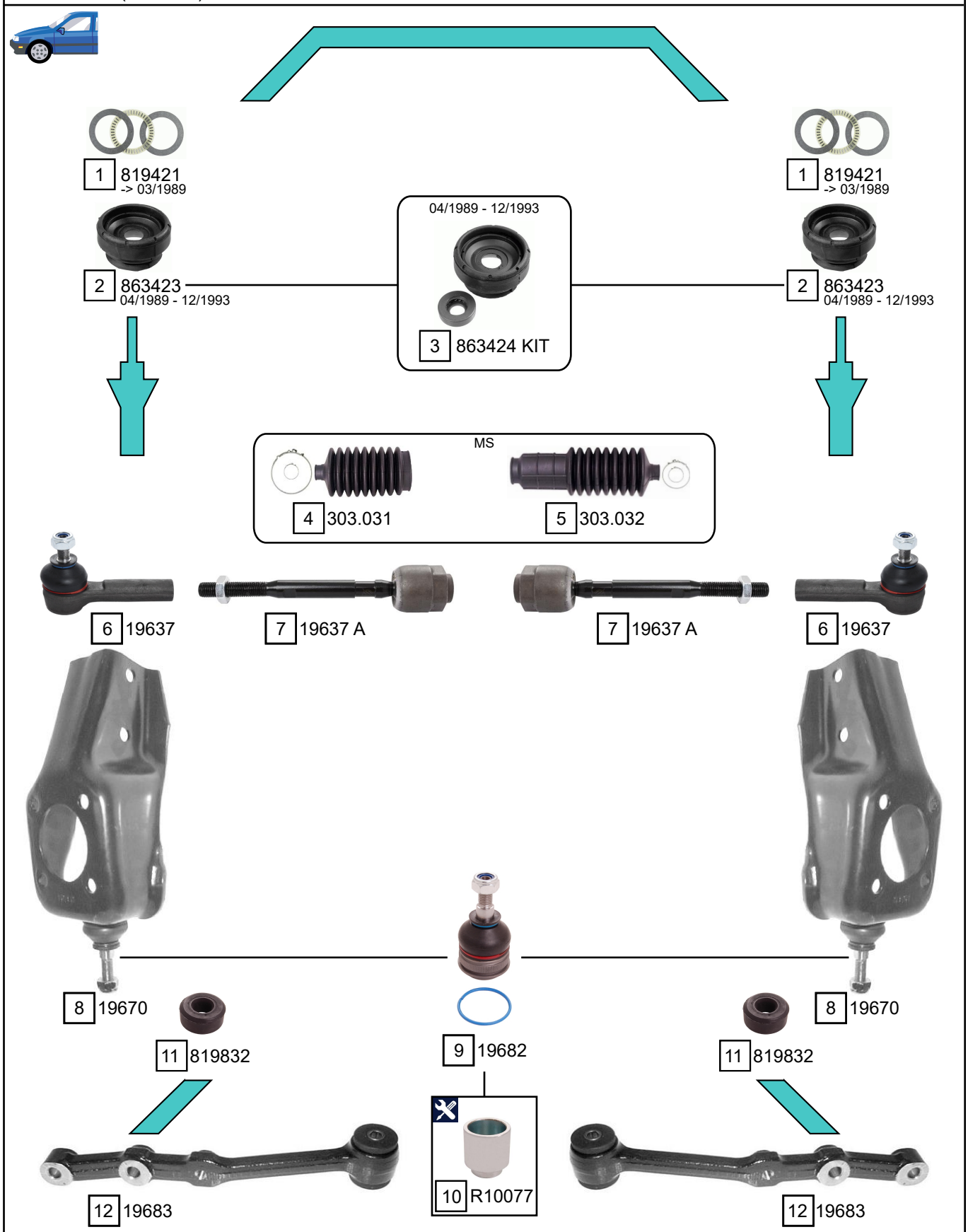

Ref.	Sidem Ref.	Description	OE-number	Measures	Ref.	Sidem Ref.	Description	OE-number	Measures
1	819421	bearing	Part of	di:50 do:70 L:3.6	7	19637 A	axial joint	SE 141 162 449 A	th:FM14X1.5R L:192
2	863423	strut mount	SE 021 156 228 A	do:75.5 L:40	8	19670	TCA wbj	599 55 03	c:12.2
3	863424 KIT	strut mount kit	SE 021 156 228 A S1	di:21.2 do:76.5 L:40.5	9	19682	ball joint lower	SE 141 140 104 A	c:12.2 do:37
4	303.031	steering rack gaiter	SE 138 162 131 A	D:42 d:10 L:125	10	R10077	mounting tool ring ø42 ø34	SEE PAGE III	di:34 do:42
5	303.032	steering rack gaiter	SE 138 162 132 A	D:26 d:10 L:165	11	819832	stabiliser mounting	SE 138 156 244 A	di:16.5
6	19637	tie rod end	SE 141 162 410 A	c:12 th:FM12X1.5R	12	19683	TCA wobj	SE 028 156 110 A	c:12

Copyright 2021

MII (KF1_) 10/2011 ->

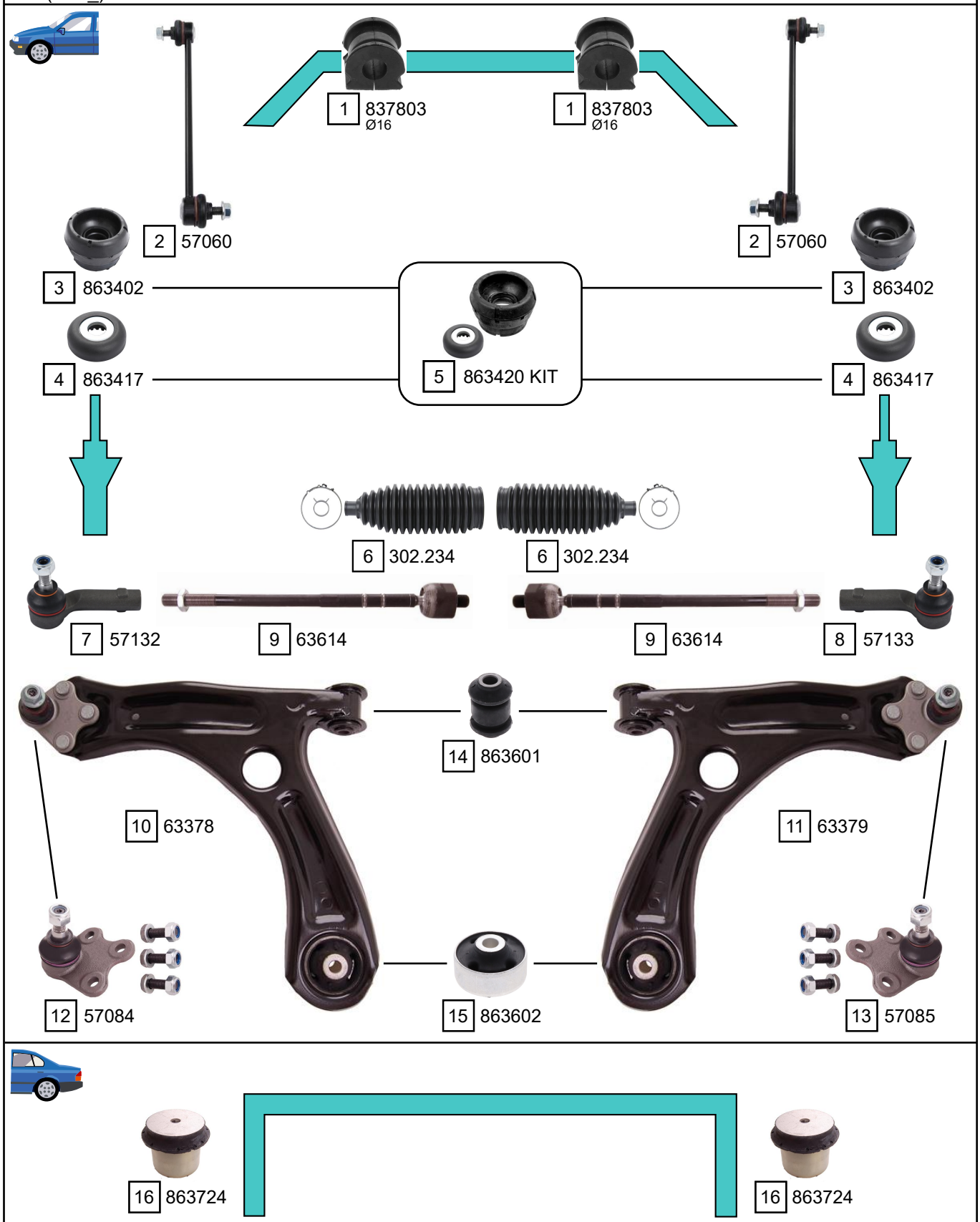

Ref.	Sidem Ref.	Description	OE-number	Measures	Ref.	Sidem Ref.	Description	OE-number	Measures
1	837803	stabiliser mounting	6Q0 411 314 P	di:16	9	63614	axial joint	1S0 423 810 A	th:MM14X1.5R L:306
2	57060	stabiliser link	6R0 411 315	L:270	10	63378	TCA left wbj	1S0 407 151	c:15
3	863402	strut mount	1J0 412 331 C	di:26 do:82 L:53	11	63379	TCA right wbj	1S0 407 152	c:15
4	863417	bearing	1J0 412 249	di:14.3 do:45.3 L:13.4	12	57084	ball joint left	6R0 407 365 A	c:14.9
5	863420 KIT	strut mount kit	1J0 412 331 C S1	di:26 do:82 L:53	13	57085	ball joint right	6R0 407 366 A	c:14.9
6	302.234	steering rack gaiter	1S0 423 831 E	D:44 d:14 L:164	14	863601	silentblock for TCA	357 407 182	di:12 do:32.6 (*)
7	57132	tie rod end left	6R0 423 811	c:13.4 th:FM14x1.5R	15	863602	silentblock for TCA	1J0 407 181	di:13 do:60 (*)
8	57133	tie rod end right	6R0 423 812	c:13.4 th:FM14x1.5R	16	863724	mounting axle body	1S0 501 541 B	di:10 do:58

Copyright 2021

SEAT
RONDA

RONDA (022A) 06/1982 - 11/1988

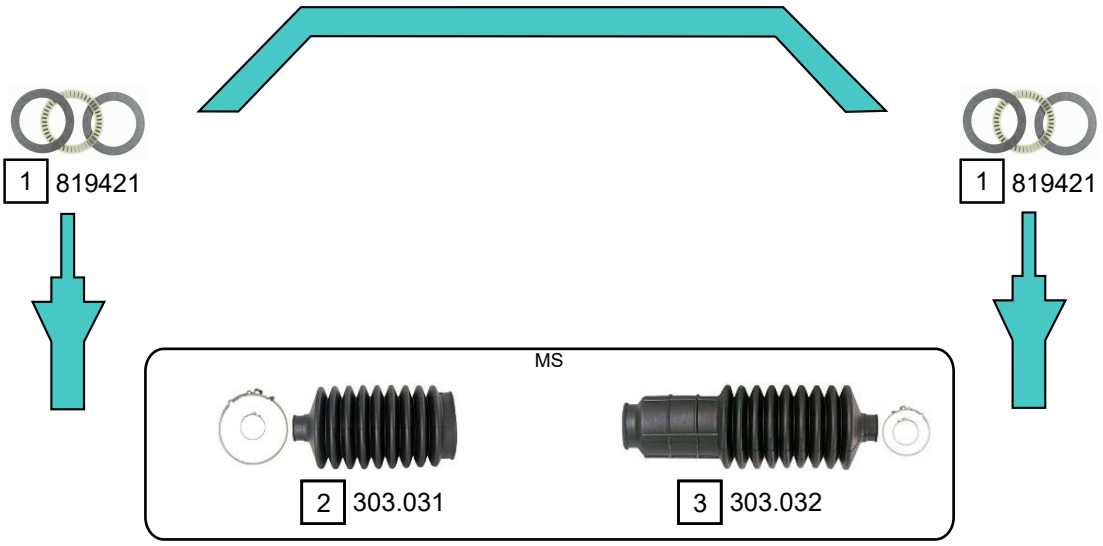

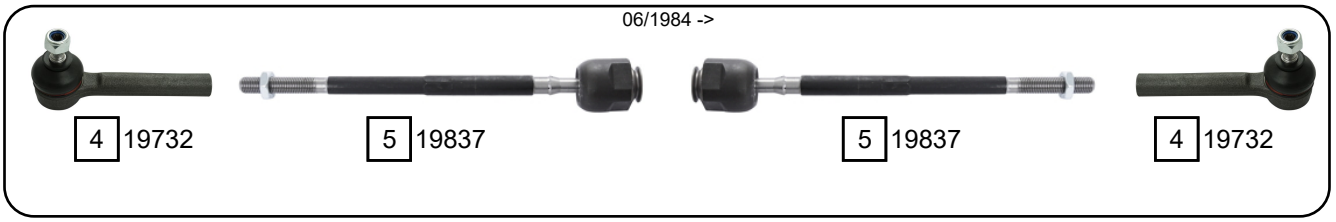

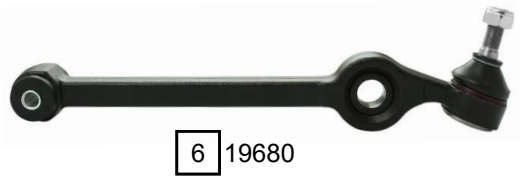

Ref.	Sidem Ref.	Description	OE-number	Measures	Ref.	Sidem Ref.	Description	OE-number	Measures
1	819421	bearing	Part of	di:50 do:70 L:3.6	4	19732	tie rod end	SE 022 162 406 A	c:12 th:FM12X1.5R
2	303.031	steering rack gaiter	SE 138 162 131 A	D:42 d:10 L:125	5	19837	axial joint	SE 022 162 449 A	th:FM14X1.5R L:278
3	303.032	steering rack gaiter	SE 138 162 132 A	D:26 d:10 L:165	6	19680	TCA wbj	SE 138 156 110 A	c:13

Copyright 2021

TARRACO (KN2_) 09/2018 ->

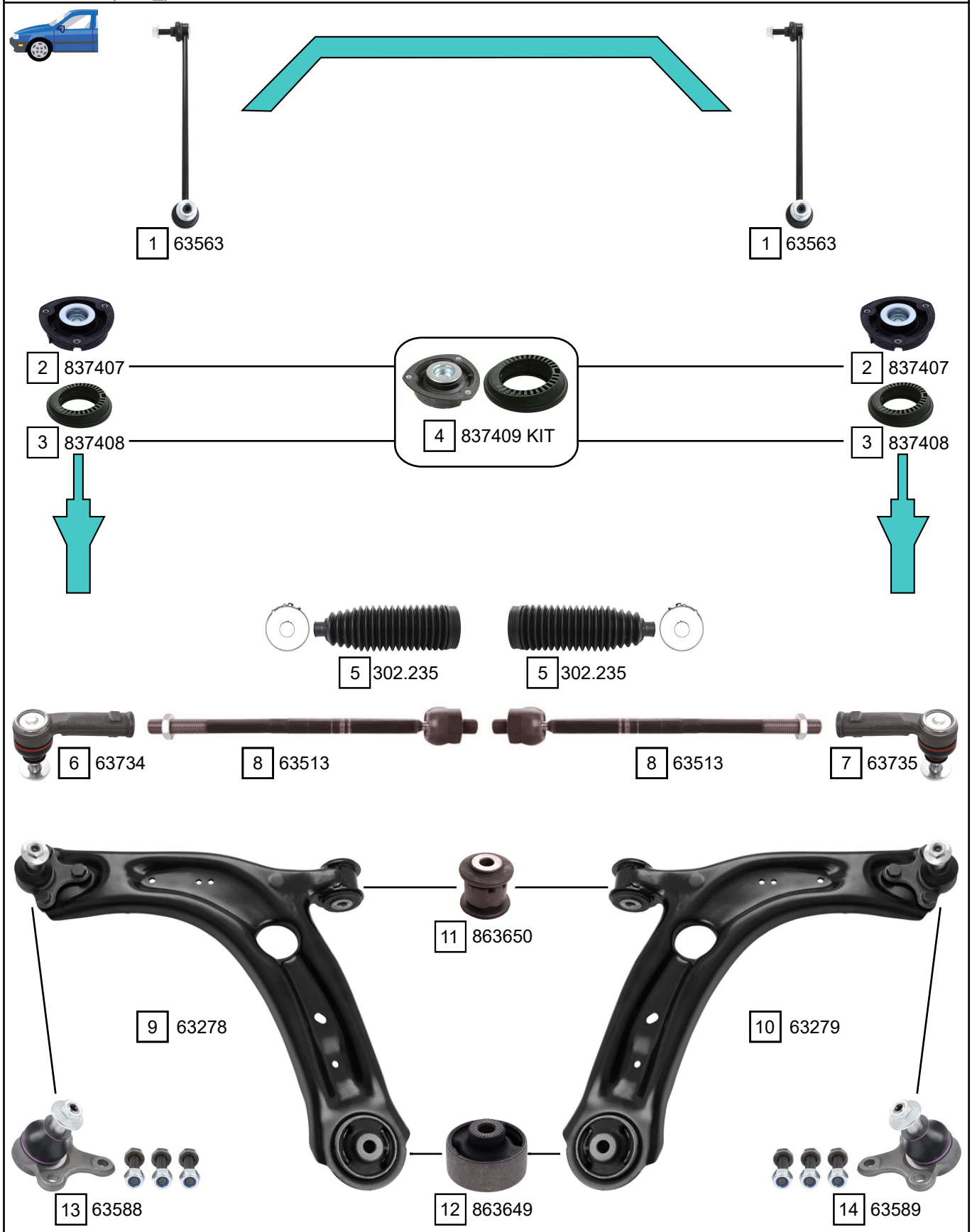

Ref.	Sidem Ref.	Description	OE-number	Measures	Ref.	Sidem Ref.	Description	OE-number	Measures
1	63563	stabiliser link	5Q0 411 315 A	L:335	7	63735	tie rod end right	1K0 423 812 J S2	c:13.2 th:FM16X1.5R
2	837407	strut mount	5Q0 412 331 E	di:14.6 do:64.1 L:42	8	63513	axial joint	561 423 810	th:MM16X1.5R L:330
3	837408	bearing	5Q0 412 249 F	di:74 do:127 L:38.6	9	63278	TCA left wbj	3Q0 407 151 E S1	c:15.2
4	837409 KIT	strut mount kit	5Q0 412 331 E S1	di:14.6 do:127	10	63279	TCA right wbj	3Q0 407 152 E S1	c:15.2
5	302.235	steering rack gaiter	5Q0 423 831	D:53.5 d:15.5 L:191	11	863650	silentblock for TCA	5Q0 407 182 A	di:12.1 do:40.1 (*)
6	63734	tie rod end left	1K0 423 811 J S2	c:13.2 th:FM16X1.5R	12	863649	silentblock for TCA	5Q0 407 183 E	di:12.9 do:65 (*)

Copyright 2021

SEAT
TARRACO

TARRACO (KN2_) 09/2018 ->

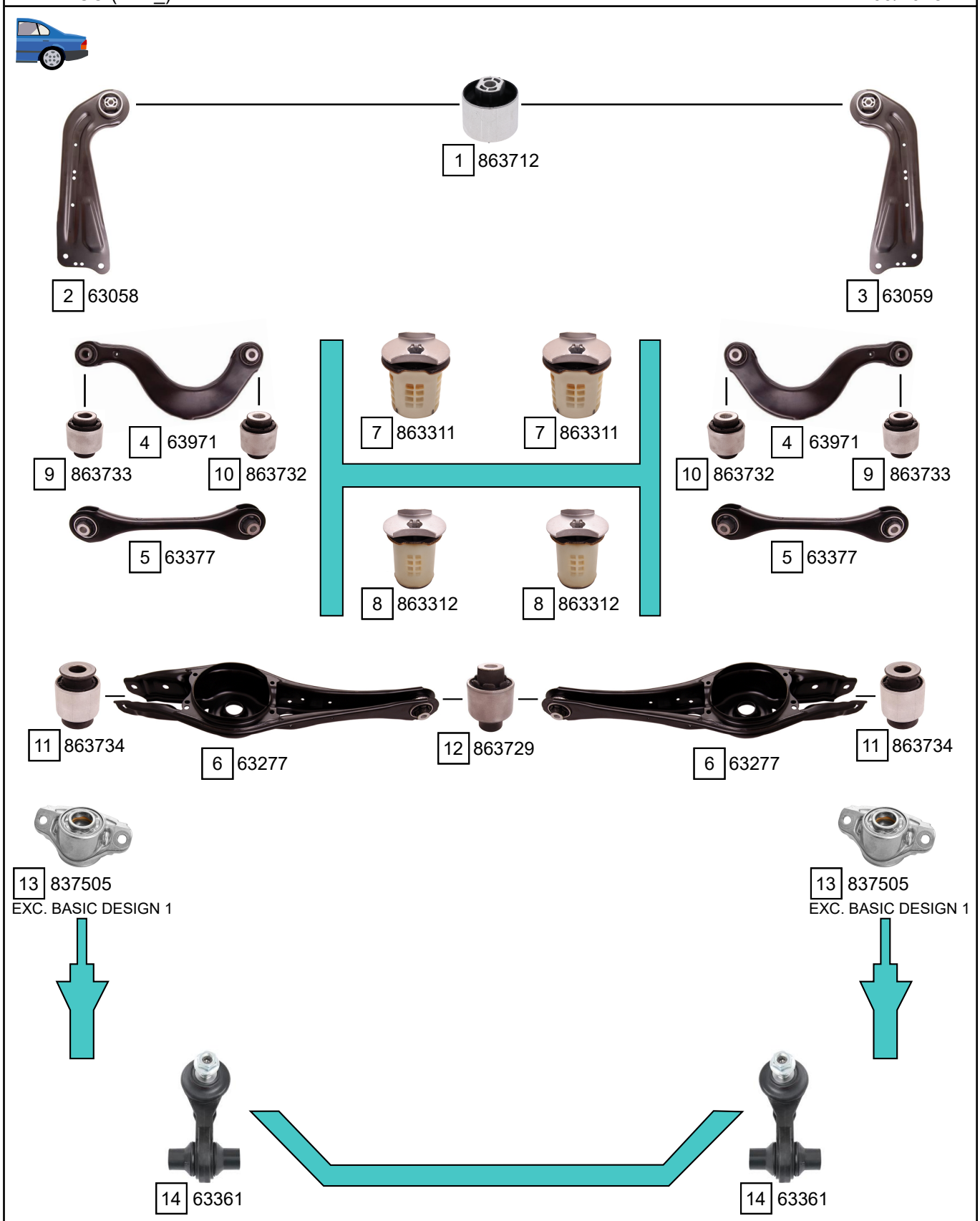

Ref.	Sidem Ref.	Description	OE-number	Measures	Ref.	Sidem Ref.	Description	OE-number	Measures
1	863712	silentblock for TCA	1K0 505 541 B	di:12.2 do:60.2 (*)	8	863311	mounting axle body	5Q0 505 145 F	di:18.2 do:61.5
2	63058	TCA left	5QF 505 223 C		9	863312	mounting axle body	5Q0 505 145 E	di:18.6 do:53.5
3	63059	TCA right	5QF 505 224 C		10	63277	TCA	3Q0 505 311 G	
4	63971	track rod	5Q0 505 323 C	L:305	11	863734	silentblock for TCA	5Q0 505 553 A	di:12.4 do:36.4 (*)
5	63377	track rod	5Q0 501 529 F	L:282	12	863729	silentblock for TCA	Part of	di:12.1 do:44.3 (*)
6	863733	silentblock for TCA	Part of	di:14.3 do:38.2 (*)	13	837505	strut mount	5Q0 513 353 G	di:10.2 do:65.8 L:63.3
7	863732	silentblock for TCA	Part of	di:12.1 do:38.3 (*)	14	63361	stabiliser link rear axle	5Q0 505 465 A	L:70

Copyright 2021

TERRA (24/024A) 01/1987 - 12/1996

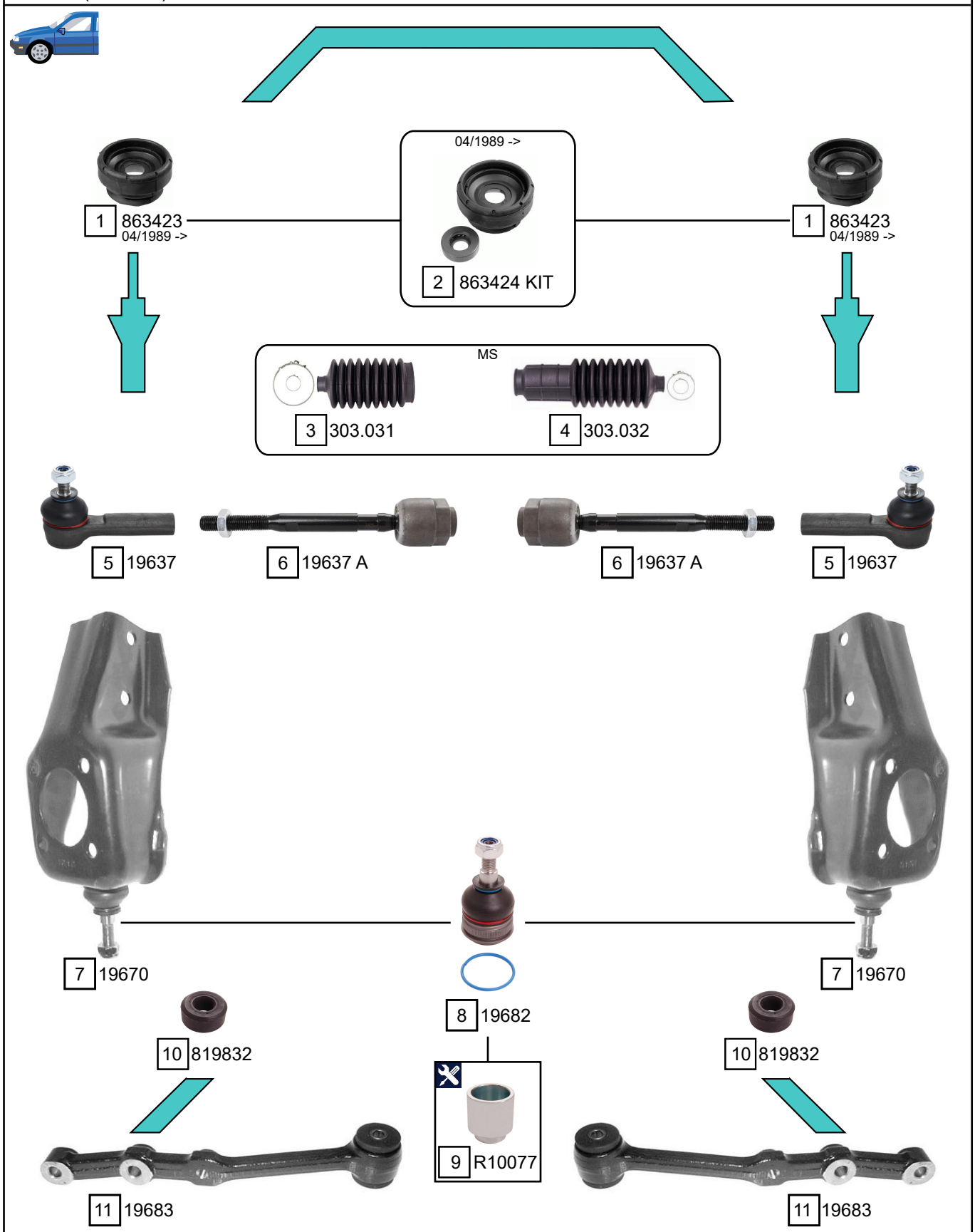

Ref.	Sidem Ref.	Description	OE-number	Measures	Ref.	Sidem Ref.	Description	OE-number	Measures
1	863423	strut mount	SE 021 156 228 A	do:75.5 L:40	7	19670	TCA wbj	599 55 03	c:12.2
2	863424 KIT	strut mount kit	SE 021 156 228 A S1	di:21.2 do:76.5 L:40.5	8	19682	ball joint lower	SE 141 140 104 A	c:12.2 do:37
3	303.031	steering rack gaiter	SE 138 162 131 A	D:42 d:10 L:125	9	R10077	mounting tool ring ø42 ø34	SEE PAGE III	di:34 do:42
4	303.032	steering rack gaiter	SE 138 162 132 A	D:26 d:10 L:165	10	819832	stabiliser mounting	SE 138 156 244 A	di:16.5
5	19637	tie rod end	SE 141 162 410 A	c:12 th:FM12X1.5R	11	19683	TCA wobj	SE 028 156 110 A	c:12
6	19637 A	axial joint	SE 141 162 449 A	th:FM14X1.5R L:192					

Copyright 2021

SEAT
TOLEDO

TOLEDO I (1L) 01/1991 - 03/1999

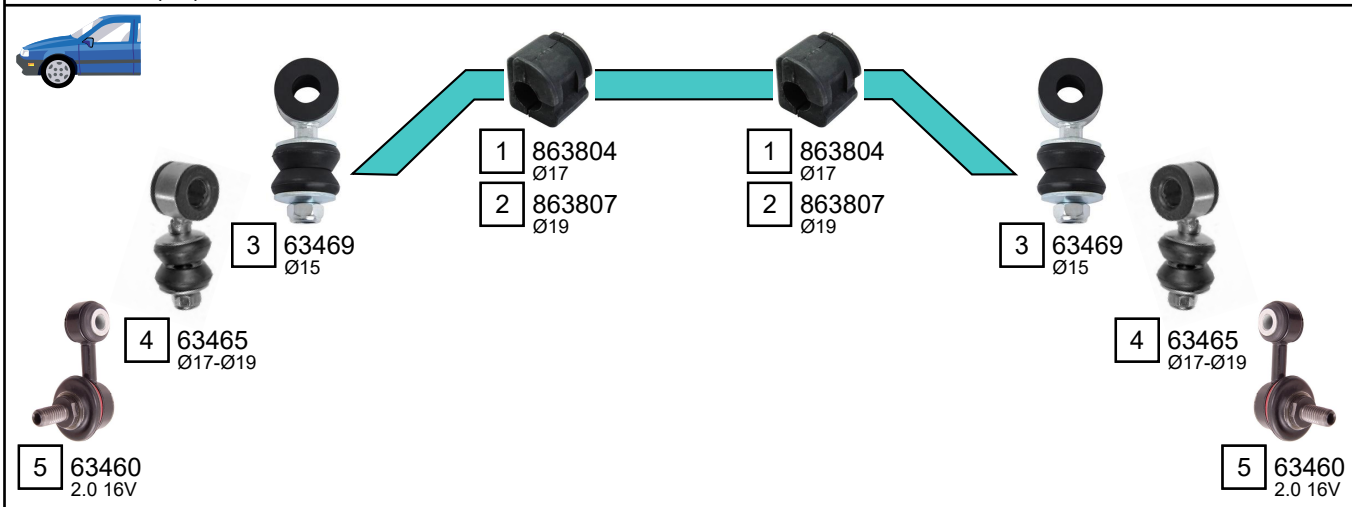

-> CHAS 1L-ZR-054-453

CHAS 1L-TR000 001 ->

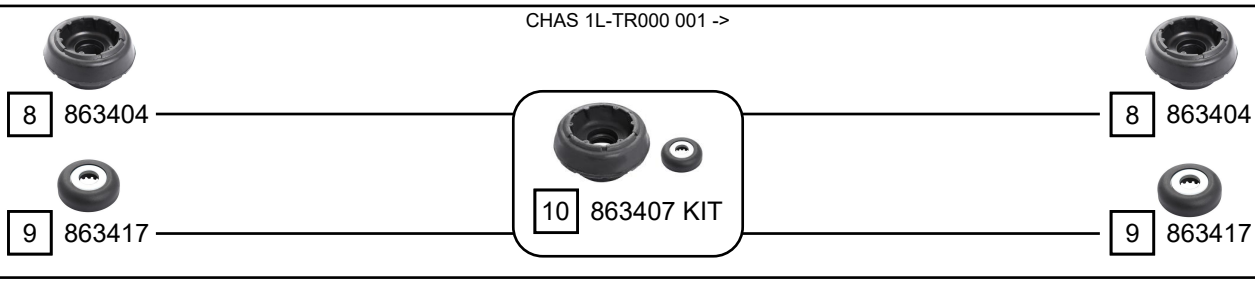

MS -> CHAS 1L-ZR-026-525

PS

Ref.	Sidem Ref.	Description	OE-number	Measures	Ref.	Sidem Ref.	Description	OE-number	Measures
1	863804	stabiliser mounting	191 411 314	di:17	7	863406 KIT	strut mount kit	191 412 329 S1	di:14.5 do:127 L:53
2	863807	stabiliser mounting	1H0 411 314	di:19	8	863404	strut mount	7M0 412 331	di:26.5 do:96.7 L:50
3	63469	stabiliser link	191 411 315 B	L:76	9	863417	bearing	1J0 412 249	di:14.3 do:45.3 L:13.4
4	63465	stabiliser link	6K0 411 315	L:78	10	863407 KIT	strut mount kit	7M0 412 331 S1	di:14.3 do:98 L:50
5	63460	stabiliser link	535 411 315	L:51	11	302.035	steering rack gaiter	191 419 831	D:41 d:25 L:120
6	863401	strut mount	191 412 329	di:14.5 do:89.3 L:52	12	307.234	steering rack gaiter	1H0 422 831 B	D:41 d:10 L:210

Copyright 2021

TOLEDO I (1L) 01/1991 - 03/1999

MS -> CHAS 1L-ZR-026-525

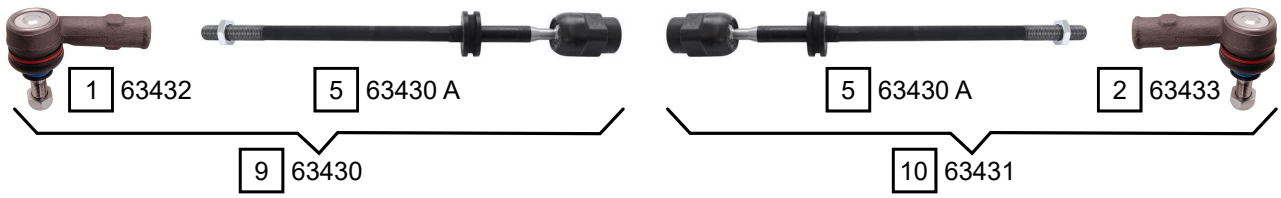

PS -> CHAS 1L-ZD-307-000

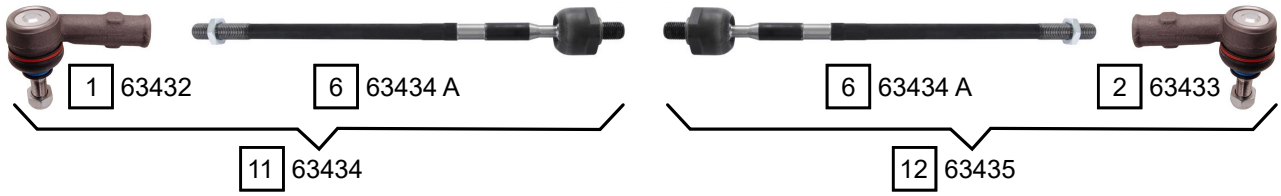

PS CHAS 1L-ZD-307-001 - 1L-TR-016-347

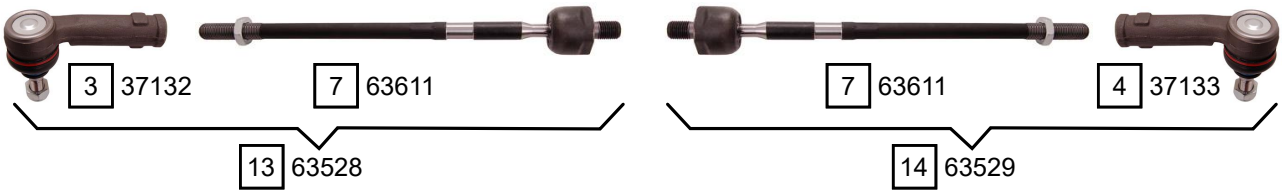

PS CHAS 1L-TR-016-348 ->

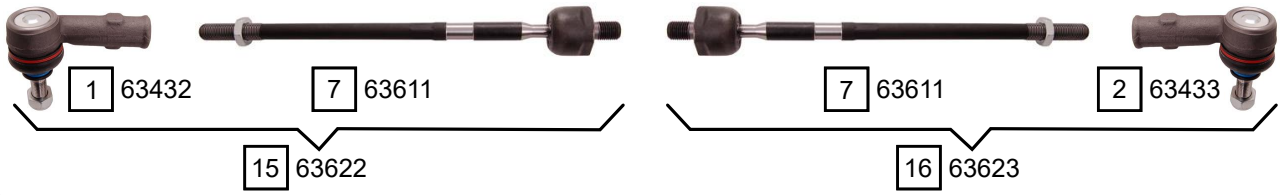

PS ONLY 2.0 16V

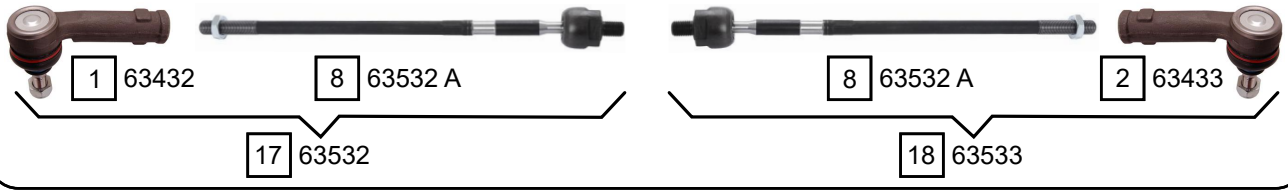

Ref.	Sidem Ref.	Description	OE-number	Measures	Ref.	Sidem Ref.	Description	OE-number	Measures
1	63432	tie rod end left	6N0 419 811	c:12.6 th:FM14x1.5R	10	63431	tie rod right	191 419 804	c:12.6
2	63433	tie rod end right	6N0 422 812	c:12.6 th:FM14x1.5R	11	63434	tie rod left	191 422 803 A	c:12.6
3	37132	tie rod end	6X0 422 811	c:12.7 th:FM14X1.5R	12	63435	tie rod right	191 422 804 A	c:12.6
4	37133	tie rod end	6X0 422 812	c:12.7 th:FM14X1.5R	13	63528	tie rod left	6K0 422 803	c:12.7
5	63430 A	axial joint	Part of	th:FM22X1.5R L:365	14	63529	tie rod right	6K0 422 804	c:12.7
6	63434 A	axial joint	Part of	th:MM14X1.5R L:341	15	63622	tie rod left	6K0 422 803 D	c:12.6
7	63611	axial joint	Part of	th:MM14X1.5R L:319	16	63623	tie rod right	6K0 422 804 D	c:12.6
8	63532 A	axial joint	Part of	th:MM14X1.5R L:371	17	63532	tie rod left	1H0 422 803 A	c:12.6
9	63430	tie rod left	191 419 803	c:12.6	18	63533	tie rod right	1H0 422 804 A	c:12.6

Copyright 2021

SEAT
TOLEDO

TOLEDO I (1L) 01/1991 - 03/1999

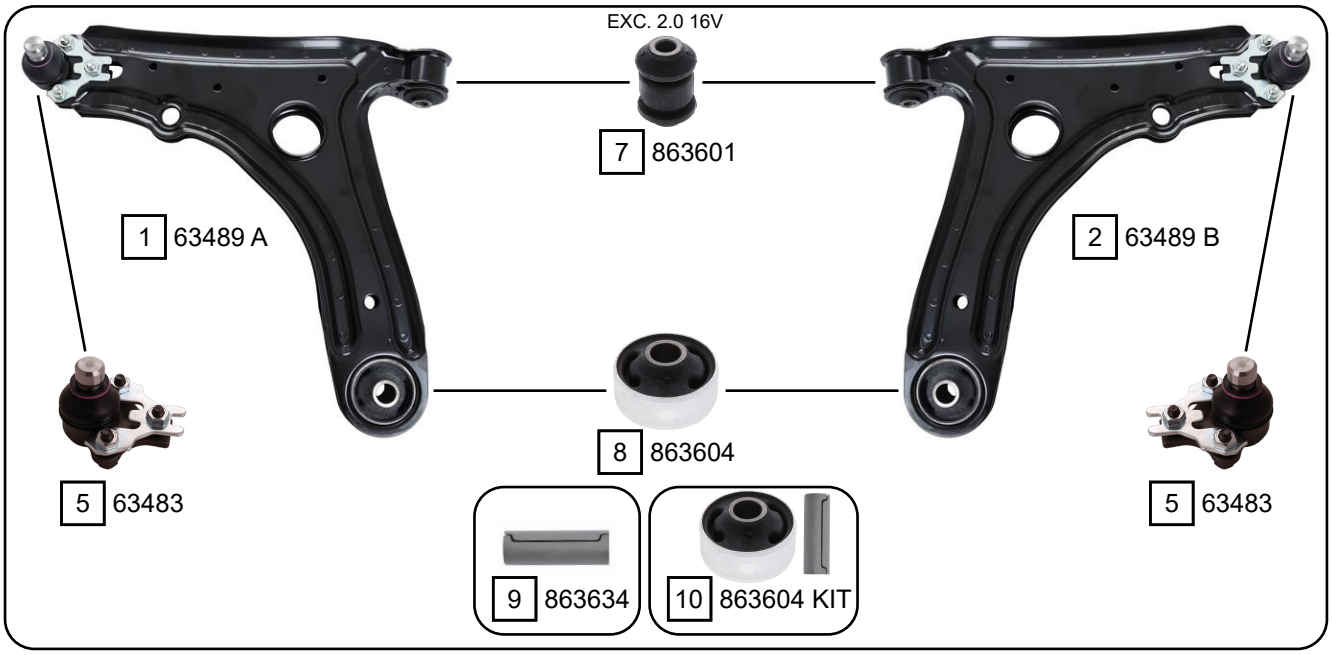

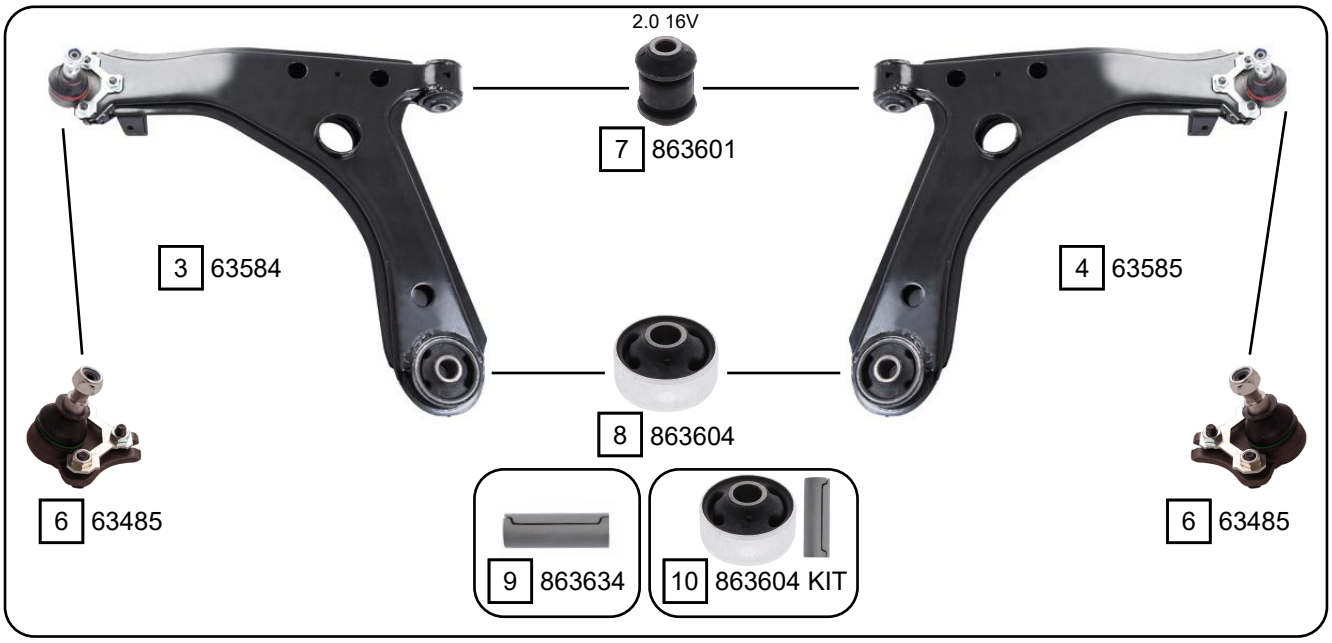

Ref.	Sidem Ref.	Description	OE-number	Measures	Ref.	Sidem Ref.	Description	OE-number	Measures
1	63489 A	TCA left wbj	191 407 151 B S1	c:19	6	63485	ball joint lower	1H0 407 365	c:16.5
2	63489 B	TCA right wbj	191 407 151 B S2	c:19	7	863601	silentblock for TCA	357 407 182	di:12 do:32.6 (*)
3	63584	TCA left wbj	1H0 407 151 A S1	c:16.5	8	863604	silentblock for TCA	191 407 181 D	di:17 do:60.1 (*)
4	63585	TCA right wbj	1H0 407 152 S1	c:16.5	9	863634	sleeve	191 407 190 A	di:15.8 do:17.2
5	63483	ball joint lower	357 407 365 A	c:19	10	863604 KIT	silentblock for TCA + sleeve	191 407 181 E S1	di:17 do:60.1 (*)

Copyright 2021

TOLEDO I (1L) 01/1991 - 03/1999

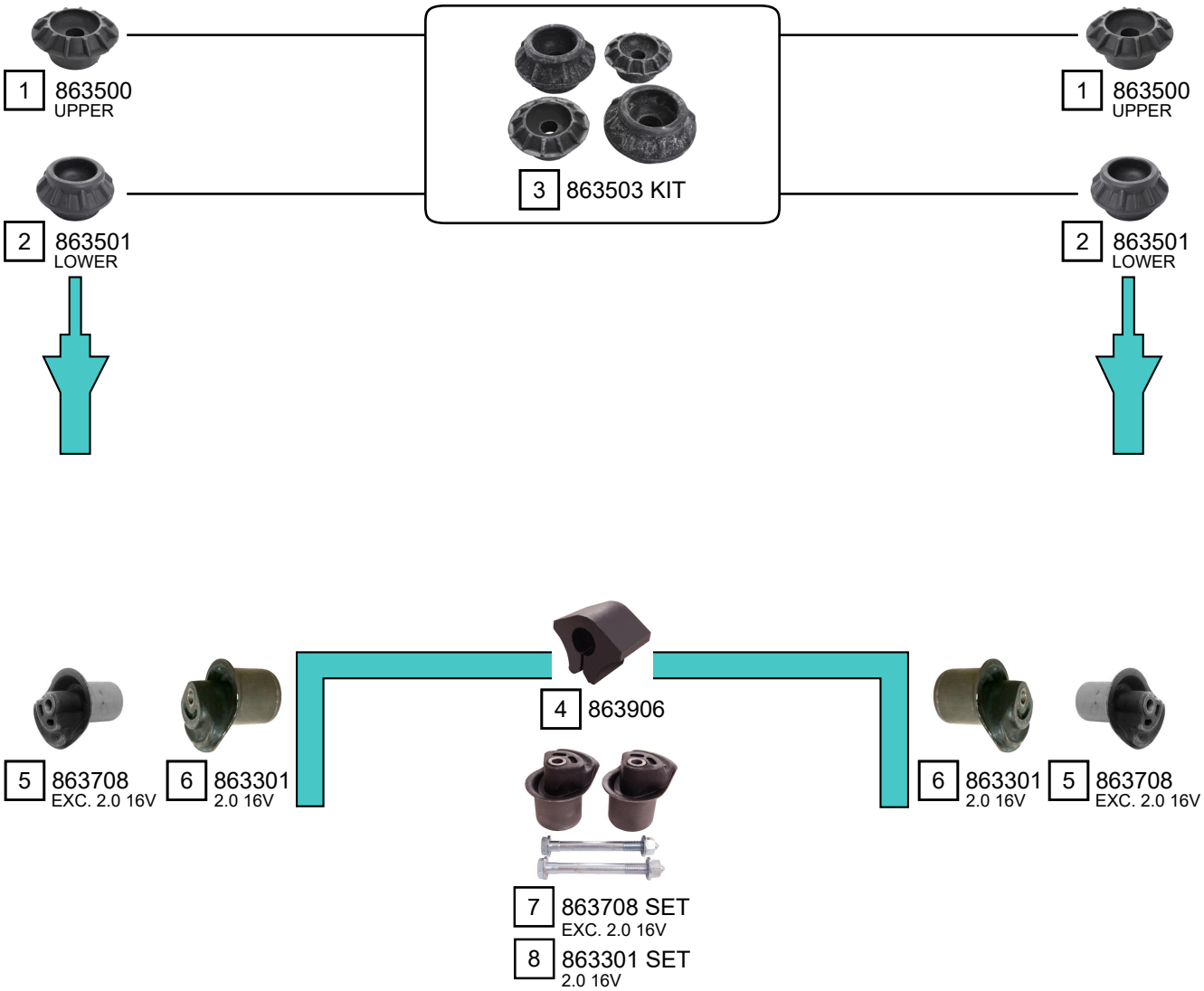

Ref.	Sidem Ref.	Description	OE-number	Measures	Ref.	Sidem Ref.	Description	OE-number	Measures
1	863500	strut mount	191 512 335	di:13.5 do:59 L:27.5	5	863708	mounting axle body	191 501 541	di:12.2 do:44.4
2	863501	strut mount	191 512 333	di:17.5 do:70 L:40	6	863301	mounting axle body	1H0 501 541 A	di:12 do:56
3	863503 KIT	strut mount kit	191 512 335 S1	di:13.5	7	863708 SET	mounting axle body set	191 501 541 S1	di:12.2 do:44.4
4	863906	stabiliser mounting	871 511 423	di:16.5	8	863301 SET	mounting axle body set	1H0 501 541 A S1	di:12 do:56

Copyright 2021

SEAT
TOLEDO

SIDEM
Experts know why

TOLEDO II (1M2) 04/1999 - 09/2004

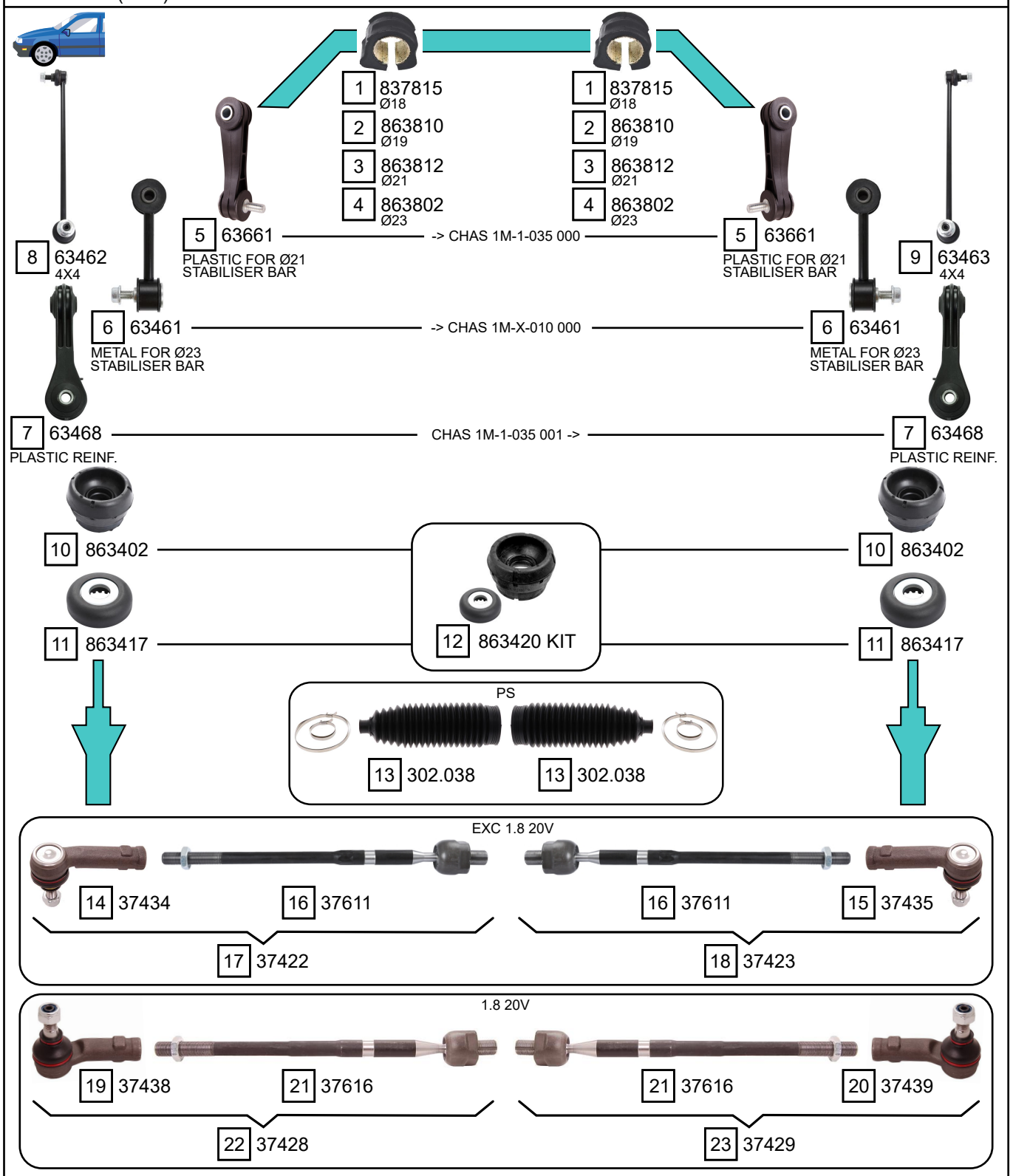

Ref.	Sidem Ref.	Description	OE-number	Measures	Ref.	Sidem Ref.	Description	OE-number	Measures
1	837815	stabiliser mounting	1J0 411 314 AC	di:18	13	302.038	steering rack gaiter	1J0 422 831 B	D:50 d:15 L:186
2	863810	stabiliser mounting	1J0 411 314 R	di:19	14	37434	tie rod end left	1J0 422 811 B	c:13.2 th:FM14x1.5R
3	863812	stabiliser mounting	1J0 411 314 T	di:21	15	37435	tie rod end right	1J0 422 812 B	c:13.2 th:FM14x1.5R
4	863802	stabiliser mounting	1J0 411 314 G	di:23	16	37611	axial joint	Part of	th:MM16X1.5R L:319
5	63661	stabiliser link	1J0 411 315 J	L:105	17	37422	tie rod left	1J0 422 803 H	c:13.2
6	63461	stabiliser link	1J0 411 315 G	L:105	18	37423	tie rod right	1J0 422 804 H	c:13.2
7	63468	stabiliser link	1J0 411 315 K	L:105	19	37438	tie rod end left	8N0 422 811 A	c:13.4 th:FM16X1.5R
8	63462	stabiliser link left	1J0 411 315 D	L:336	20	37439	tie rod end right	8N0 422 812 A	c:13.4 th:FM16X1.5R
9	63463	stabiliser link right	1J0 411 316 D	L:336	21	37616	axial joint	Part of	th:MM16X1.5R L:333
10	863402	strut mount	1J0 412 331 C	di:26 do:82 L:53	22	37428	tie rod left	8N0 422 803 D	c:13.4 L:370
11	863417	bearing	1J0 412 249	di:14.3 do:45.3 L:13.4	23	37429	tie rod right	8N0 422 804 D	c:13.4 L:370
12	863420 KIT	strut mount kit	1J0 412 331 C S1	di:26 do:82 L:53					

Copyright 2021

TOLEDO II (1M2) 04/1999 - 09/2004

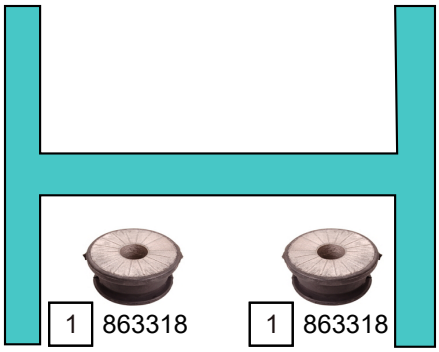

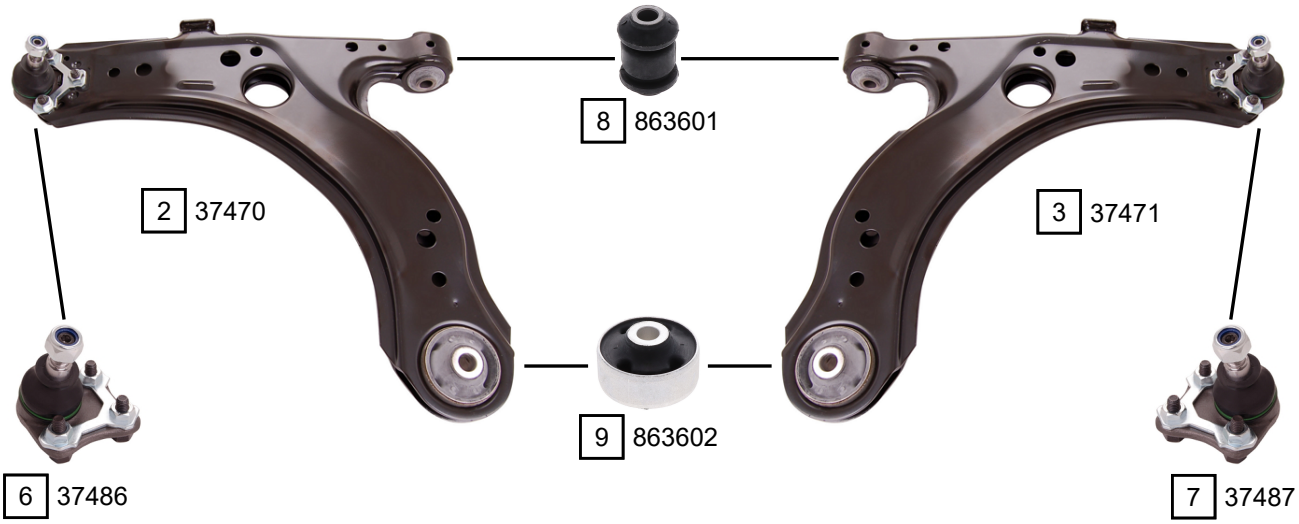

REINFORCED - ONLY REPLACE IN PAIRS

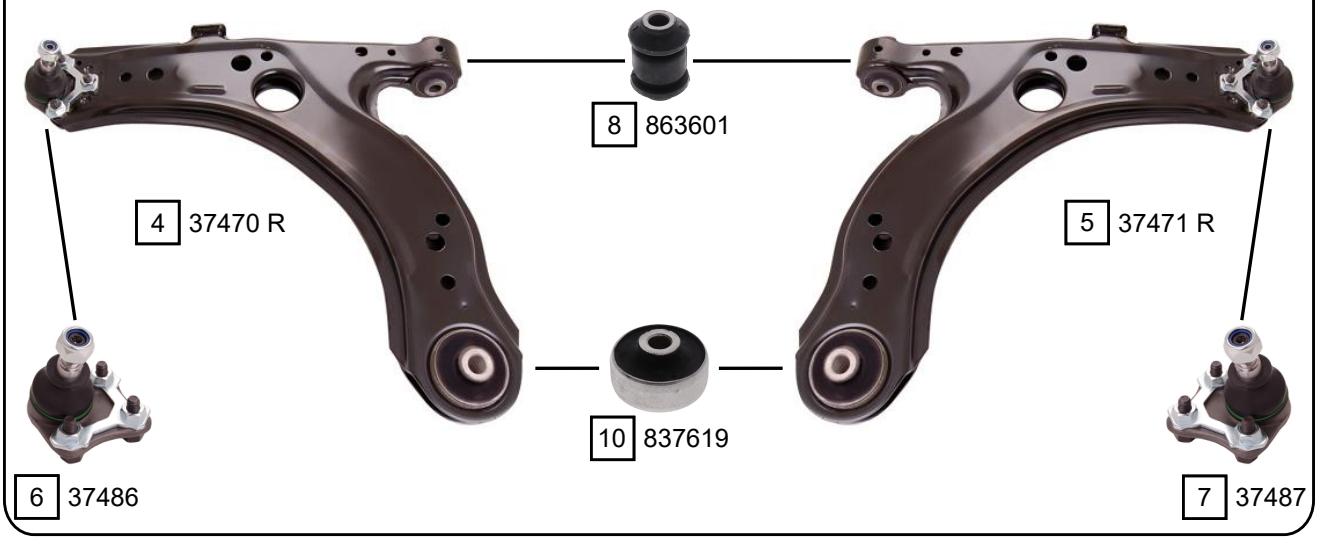

Ref.	Sidem Ref.	Description	OE-number	Measures	Ref.	Sidem Ref.	Description	OE-number	Measures
1	863318	mounting axle body	1J0 199 429	di:18.2 do:50.5	6	37486	ball joint left	1J0 407 365 J	c:14.9
2	37470	TCA left wbj	1J0 407 151 C S1	c:14.9	7	37487	ball joint right	1J0 407 366 J	c:14.9
3	37471	TCA right wbj	1J0 407 151 C S2	c:14.9	8	863601	silentblock for TCA	357 407 182	di:12 do:32.6 (*)
4	37470 R	TCA left wbj	1J0 407 151 C S1 R	c:14.9	9	863602	silentblock for TCA	1J0 407 181	di:13 do:60 (*)
5	37471 R	TCA right wbj	1J0 407 151 C S2 R	c:14.9	10	837619	silentblock for TCA	8N0 407 181 B	di:13.2 do:60.2 (*)

Copyright 2021

SEAT
TOLEDO

TOLEDO II (1M2) 04/1999 - 09/2004

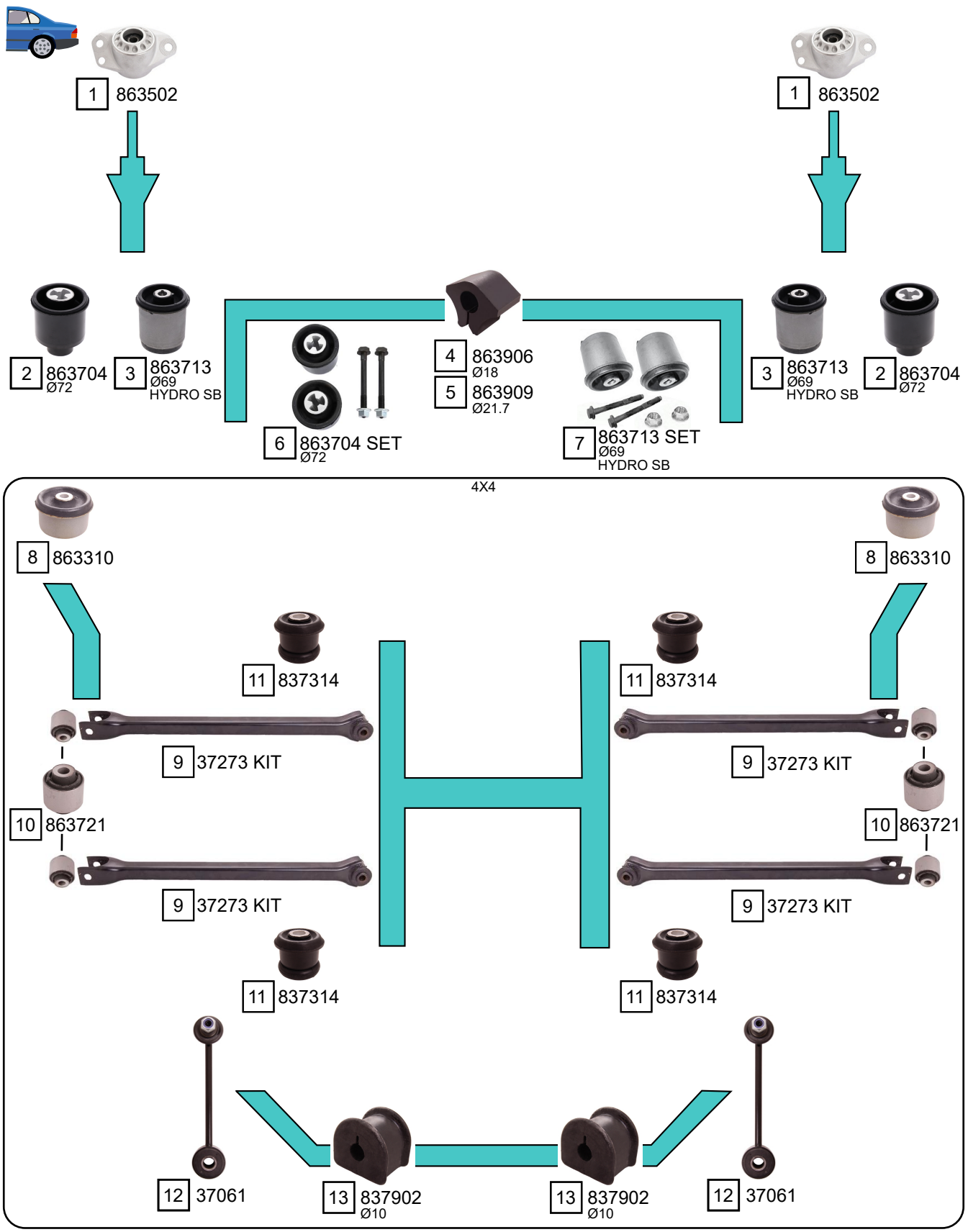

Ref.	Sidem Ref.	Description	OE-number	Measures	Ref.	Sidem Ref.	Description	OE-number	Measures
1	863502	strut mount	6R0 513 353	di:11.1 do:62 L:58.8	8	863310	mounting axle body	1J0 505 171 B	di:12 do:72
2	863704	mounting axle body	1J0 501 541 C	di:12 do:71.5	9	37273 KIT	track rod	1J0 505 323 L S1	L:517
3	863713	mounting axle body	1J0 501 541 D	di:13.2 do:69	10	863721	silentblock for TCA	1J0 505 203	di:12.3 do:43.6 (*)
4	863906	stabiliser mounting	871 511 423	di:16.5	11	837314	mounting axle body	1J0 505 145 B	di:16 do:51.6
5	863909	stabiliser mounting	1J0 511 423	di:18	12	37061	stabiliser link rear axle	1J0 505 466 B	L:175
6	863704 SET	mounting axle body set	1J0 501 541 C S1	do:71.5	13	837902	stabiliser mounting	8D0 511 327 C	di:10.5
7	863713 SET	mounting axle body set	1J0 501 541 D S1	do:69					

Copyright 2021

TOLEDO III (5P2) 10/2004 - 05/2009

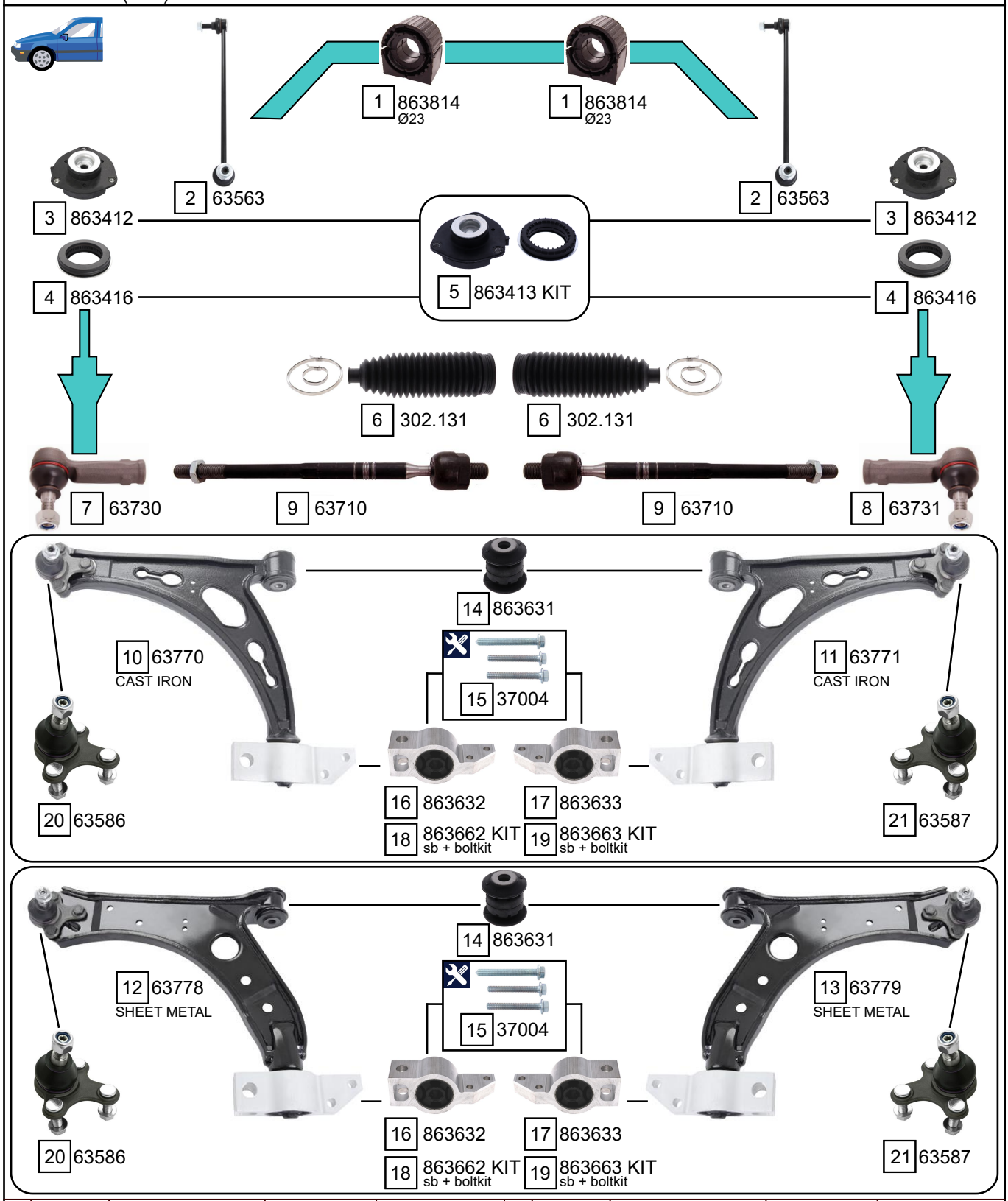

Ref.	Sidem Ref.	description	OE-number	measures	Ref.	Sidem Ref.	description	OE-number	measures
1	863814	stabiliser mounting	Part of	di:21	12	63778	TCA left wbj	1K0 407 151 AA S1	c:15.4
2	63563	stabiliser link	5Q0 411 315 A	L:335	13	63779	TCA right wbj	1K0 407 152 AA S2	c:15.4
3	863412	strut mount	1K0 412 331 B	di:14.2 L:49.5	14	863631	silentblock for TCA	1K0 407 182	di:12.1 do:40 (*)
4	863416	bearing	1K0 412 249 B	di:68.5 do:112 L:25.5	15	37004	mounting kit	N 910 398 02 S1	th:M10x1.5R
5	863413 KIT	strut mount kit	1K0 412 331 B S1	di:14.2 L:50	16	863632	silentblock for TCA	1K0 199 231 J	di:18.8 (*)
6	302.131	steering rack gaiter	1K0 423 831 A	D:50 d:15 L:193	17	863633	silentblock for TCA	1K0 199 232 J	di:18.8 (*)
7	63730	tie rod end left	1K0 423 811 J S1	c:13.2 th:FM16x1.5R	18	863662 KIT	silentblock kit	1K0 199 231 J S1	
8	63731	tie rod end right	1K0 423 812 J S1	c:13.2 th:FM16x1.5R	19	863663 KIT	silentblock kit	1K0 199 232 J S1	
9	63710	axial joint	1K0 423 810 A	th:MM16X1.5R L:312	20	63586	ball joint left	1K0 407 365 C	c:15.4
10	63770	TCA left wbj	1K0 407 151 AC	c:15.4	21	63587	ball joint right	1K0 407 366 C	c:15.4
11	63771	TCA right wbj	1K0 407 152 AC	c:15.4					

Copyright 2021

SEAT
TOLEDO

TOLEDO III (5P2) 10/2004 - 05/2009

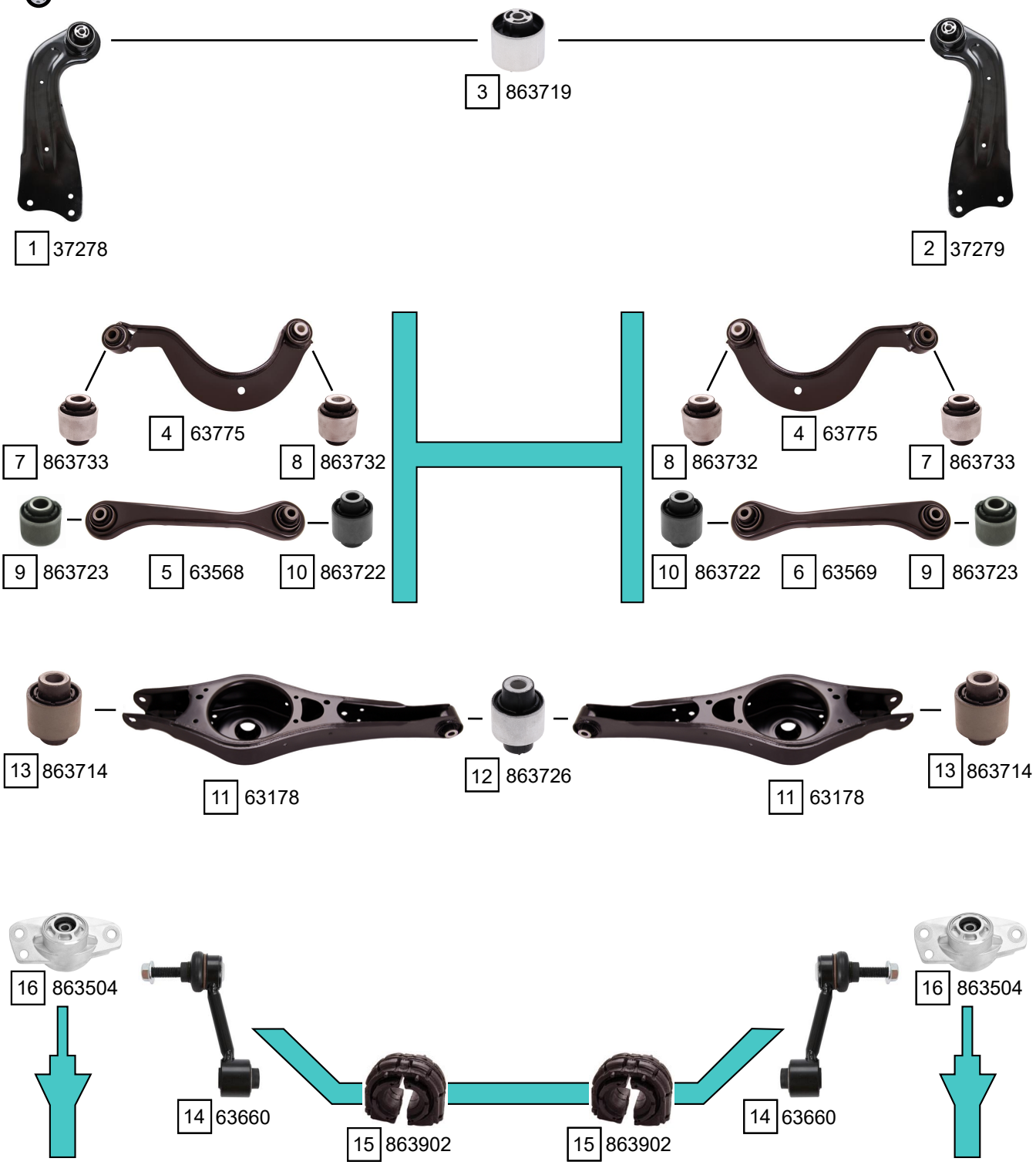

Ref.	Sidem Ref.	Description	OE-number	Measures	Ref.	Sidem Ref.	Description	OE-number	Measures
1	37278	TCA left	1K0 505 223 K	L:373	9	863723	silentblock for TCA	Part of	di:14.2 do:40.1 (*)
2	37279	TCA right	1K0 505 224 K	L:373	10	863722	silentblock for TCA	Part of	di:12.1 do:40.4 (*)
3	863719	mounting axle body	3C0 505 541	di:12.2 do:60.2 (*)	11	63178	TCA	1K0 505 311 AB	
4	63775	track rod	1K0 505 323 N	L:305.5	12	863726	silentblock for TCA	Part of	di:12.1 do:42 (*)
5	63568	track rod	1K0 501 529 F	L:298	13	863714	silentblock for TCA	1K0 505 553 A	di:12.2 do:37.4 (*)
6	63569	track rod	1K0 501 530 C	L:298	14	63660	stabiliser link rear axle	1K0 505 465 K	L:95
7	863733	silentblock for TCA	Part of	di:14.3 do:38.2 (*)	15	863902	stabiliser mounting	1K0 511 327 AQ	di:19
8	863732	silentblock for TCA	Part of	di:12.1 do:38.3 (*)	16	863504	strut mount	1K0 513 353 G	di:10.5 do:63 L:62

Copyright 2021

TOLEDO IV (KG3) 07/2012 - 04/2019

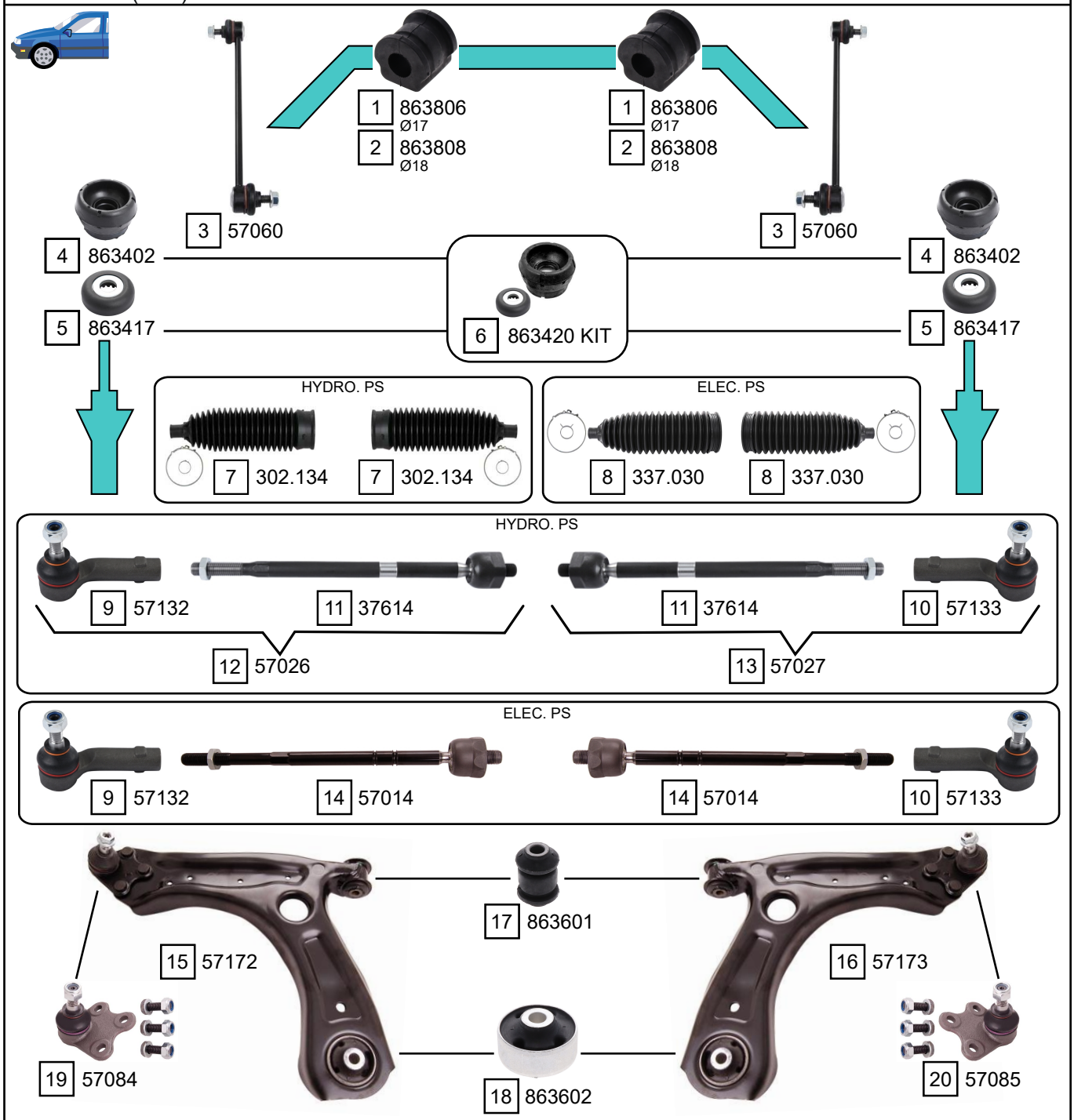

Ref.	Sidem Ref.	description	OE-number	measures	Ref.	Sidem Ref.	description	OE-number	measures
1	863806	stabiliser mounting	6Q0 411 314 Q	di:17	12	57026	tie rod left	6R0 423 803 A	c:13.4
2	863808	stabiliser mounting	6Q0 411 314 R	di:18	13	57027	tie rod right	6R0 423 804 A	c:13.4
3	57060	stabiliser link	6R0 411 315	L:270	14	57014	axial joint	6C0 423 810 C	th:MM14X1.5R L:312
4	863402	strut mount	1J0 412 331 C	di:26 do:82 L:53	15	57172	TCA left wbj	6R0 407 151 F	c:14.9
5	863417	bearing	1J0 412 249	di:14.3 do:45.3 L:13.4	16	57173	TCA right wbj	6R0 407 152 F	c:14.9
6	863420 KIT	strut mount kit	1J0 412 331 C S1	di:26 do:82 L:53	17	863601	silentblock for TCA	357 407 182	di:12 do:32.6 (*)
7	302.134	steering rack gaiter	6Q0 423 831 D	D:48 d:14 L:205	18	863602	silentblock for TCA	1J0 407 181	di:13 do:60 (*)
8	337.030	steering rack gaiter	6C0 423 831 B	D:51 d:13.5 L:191	19	57084	ball joint left	6R0 407 365 A	c:14.9
9	57132	tie rod end left	6R0 423 811	c:13.4 th:FM14x1.5R	20	57085	ball joint right	6R0 407 366 A	c:14.9
10	57133	tie rod end right	6R0 423 812	c:13.4 th:FM14x1.5R	21	863718	mounting axle body	6R0 501 541 A	do:71.6
11	37614	axial joint	Part of	th:MM14x1.5R L:313	22	863906	stabiliser mounting	871 511 423	di:16.5

Copyright 2021