SKODA
CITIGO

CITIGO 10/2011 ->

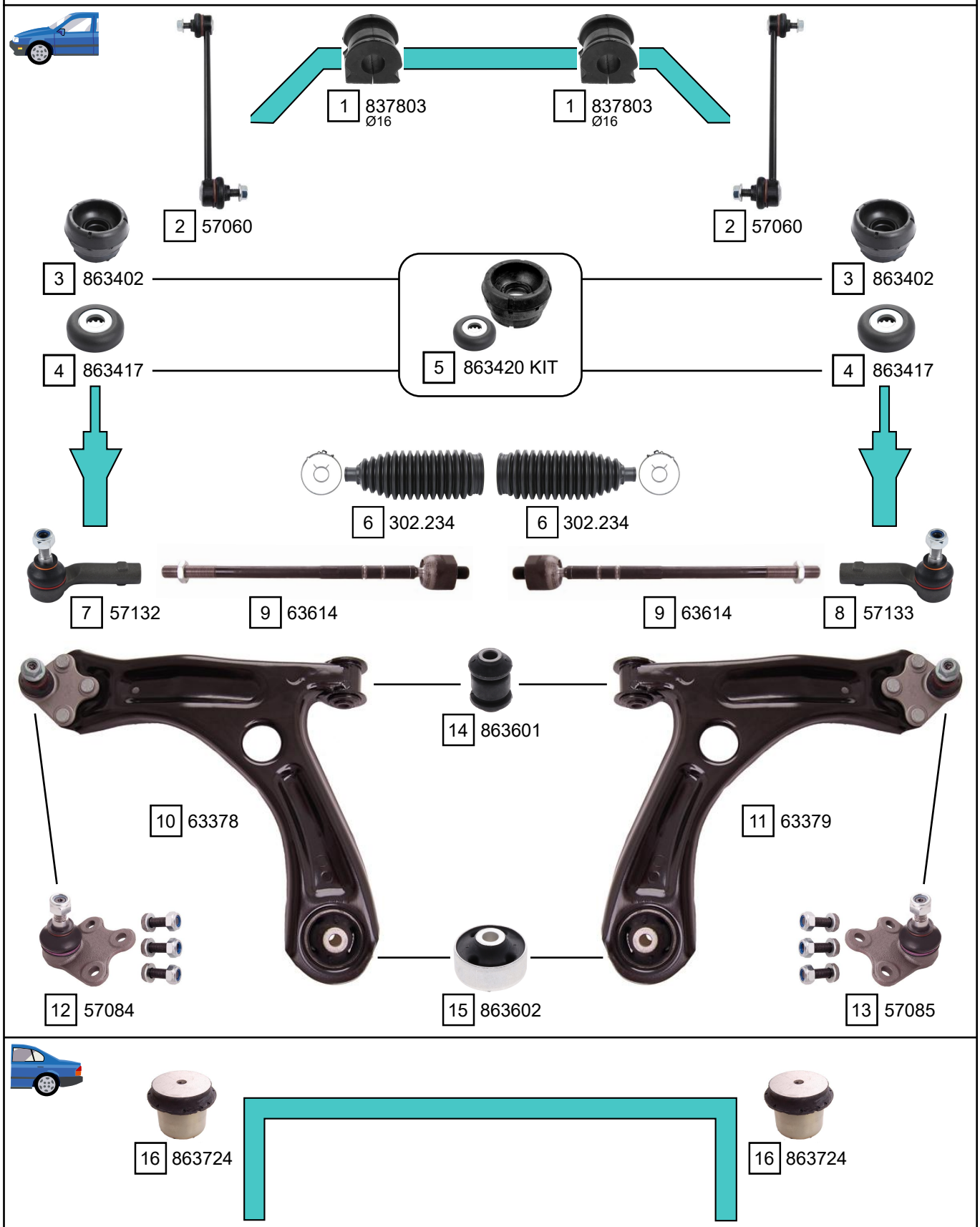

Ref.	Sidem Ref.	Description	OE-number	Measures	Ref.	Sidem Ref.	Description	OE-number	Measures
1	837803	stabiliser mounting	6Q0 411 314 P	di:16	9	63614	axial joint	1S0 423 810 A	th:MM14X1.5R L:306
2	57060	stabiliser link	6R0 411 315	L:270	10	63378	TCA left wbj	1S0 407 151	c:15
3	863402	strut mount	1J0 412 331 C	di:26 do:82 L:53	11	63379	TCA right wbj	1S0 407 152	c:15
4	863417	bearing	1J0 412 249	di:14.3 do:45.3 L:13.4	12	57084	ball joint left	6R0 407 365 A	c:14.9
5	863420 KIT	strut mount kit	1J0 412 331 C S1	di:26 do:82 L:53	13	57085	ball joint right	6R0 407 366 A	c:14.9
6	302.234	steering rack gaiter	1S0 423 831 E	D:44 d:14 L:164	14	863601	silentblock for TCA	357 407 182	di:12 do:32.6 (*)
7	57132	tie rod end left	6R0 423 811	c:13.4 th:FM14x1.5R	15	863602	silentblock for TCA	1J0 407 181	di:13 do:60 (*)
8	57133	tie rod end right	6R0 423 812	c:13.4 th:FM14x1.5R	16	863724	mounting axle body	1S0 501 541 B	di:10 do:58

Copyright 2021

FABIA III (6Y2,6Y3,6Y5) 12/1999 - 03/2008

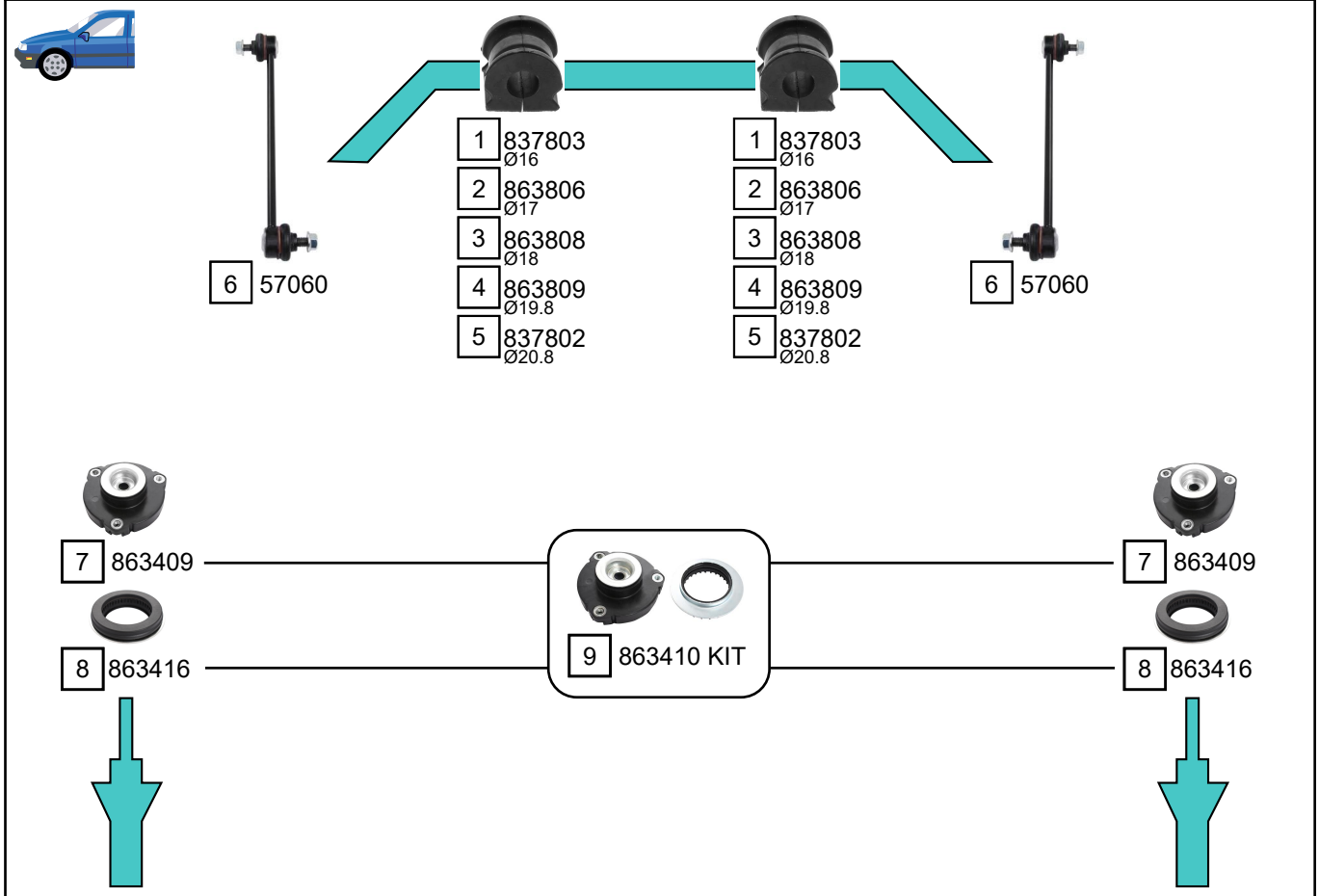

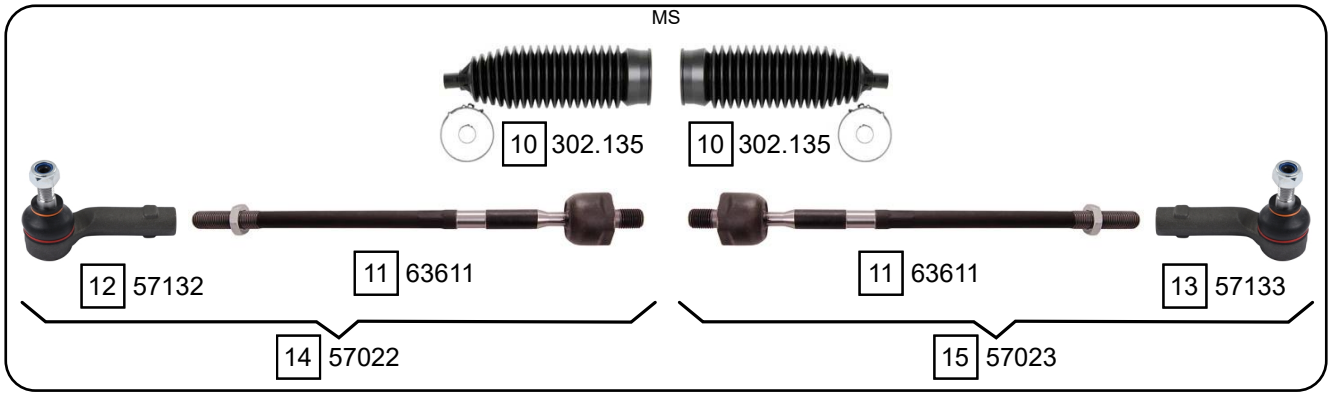

Ref.	Sidem Ref.	Description	OE-number	Measures	Ref.	Sidem Ref.	Description	OE-number	Measures
1	837803	stabiliser mounting	6Q0 411 314 P	di:16	9	863410 KIT	strut mount kit	6N0 412 331 E S2	di:14.3
2	863806	stabiliser mounting	6Q0 411 314 Q	di:17	10	302.135	steering rack gaiter	6E0 419 831	D:48 d:12 L:200
3	863808	stabiliser mounting	6Q0 411 314 R	di:18	11	63611	axial joint	Part of	th:MM14X1.5R L:319
4	863809	stabiliser mounting	6Q0 411 314 F	di:19.6	12	57132	tie rod end left	6R0 423 811	c:13.4 th:FM14x1.5R
5	837802	stabiliser mounting	8Z0 411 314 B	di:20.8	13	57133	tie rod end right	6R0 423 812	c:13.4 th:FM14x1.5R
6	57060	stabiliser link	6R0 411 315	L:270	14	57022	tie rod left	6Q0 419 803 F	c:13.4
7	863409	strut mount	6N0 412 331 E	di:14.3 do:66 L:49	15	57023	tie rod right	6Q0 419 804 F	c:13.4
8	863416	bearing	1K0 412 249 B	di:68.5 do:112 L:25.5					

Copyright 2021

SKODA
FABIA

FABIA III (6Y2,6Y3,6Y5) 12/1999 - 03/2008

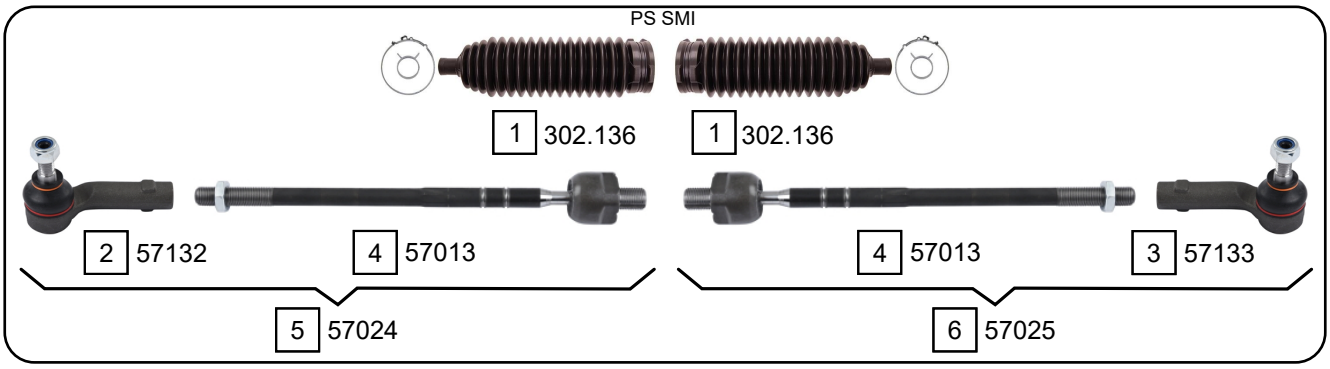

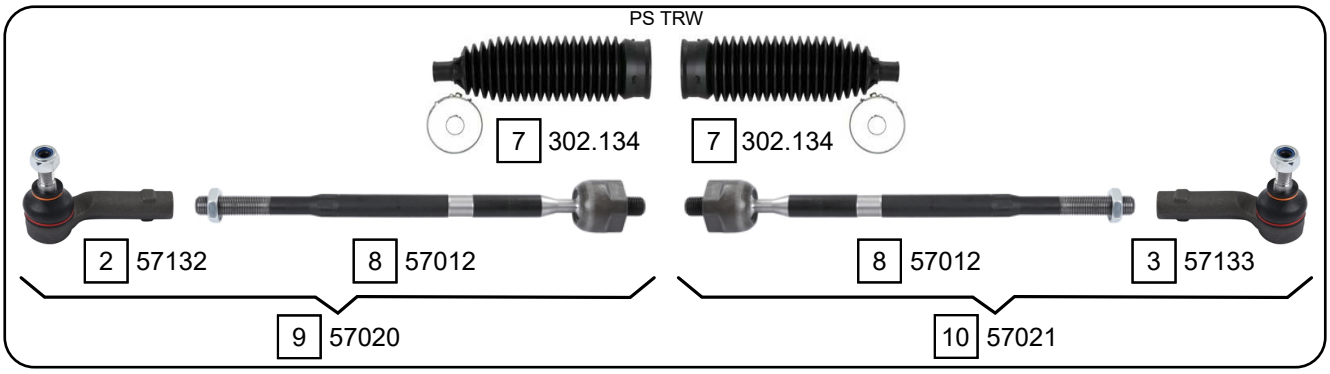

Ref.	Sidem Ref.	Description	OE-number	Measures	Ref.	Sidem Ref.	Description	OE-number	Measures
1	302.136	steering rack gaiter	6Q0 423 831 A	D:46 d:13 L:210	10	57021	tie rod right	6Q0 423 804 P	c:13.4
2	57132	tie rod end left	6R0 423 811	c:13.4 th:FM14x1.5R	11	57076	TCA left wbj	6Q0 407 151 L S1	c:14.8
3	57133	tie rod end right	6R0 423 812	c:13.4 th:FM14x1.5R	12	57077	TCA right wbj	6Q0 407 151 L S2	c:14.8
4	57013	axial joint	6Q0 423 810 C	th:MM16x1.5R L:300	13	57176	TCA left wbj	6Q0 407 151 L S3	c:14.8
5	57024	tie rod left	6Q0 423 803 G	c:13.4	14	57177	TCA right wbj	6Q0 407 151 L S4	c:14.8
6	57025	tie rod right	6Q0 423 804 G	c:13.4	15	857606	silentblock for TCA	6Q0 407 182 A	di:12.1 do:32 (*)
7	302.134	steering rack gaiter	6Q0 423 831 D	D:48 d:14 L:205	16	857607	silentblock for TCA	1K0 407 183 E	di:18.5 do:64 (*)
8	57012	axial joint	Part of	th:MM14X1.5R L:297	17	57082	ball joint	6Q0 407 365 A	c:14.8
9	57020	tie rod left	6Q0 423 803 P	c:13.4	18	57083	ball joint	6Q0 407 366 A	c:14.8

Copyright 2021

FABIA III (6Y2,6Y3,6Y5) 12/1999 - 03/2008

1 863502

1 863502

2 863713
Ø69
HYDRO SB

3 863704
Ø72

3 863704
Ø72

2 863713
Ø69
HYDRO SB

4 863720
Ø70
HEAVY DUTY

5 863704 SET
Ø72

6 863713 SET
Ø69
HYDRO SB

4 863720
Ø70
HEAVY DUTY

Ref.	Sidem Ref.	Description	OE-number	Measures	Ref.	Sidem Ref.	Description	OE-number	Measures
1	863502	strut mount	6R0 513 353	di:11.1 do:62 L:58.8	4	863720	mounting axle body	6Q0 501 541 E	di:12.1 do:70
2	863713	mounting axle body	1J0 501 541 D	di:13.2 do:69	5	863704 SET	mounting axle body set	1J0 501 541 C S1	do:71.5
3	863704	mounting axle body	1J0 501 541 C	di:12 do:71.5	6	863713 SET	mounting axle body set	1J0 501 541 D S1	do:69

Copyright 2021

SKODA
FABIA

FABIA II (542,5J_) 12/2006 - 12/2014
FABIA II COMBI (545,5J_) 10/2007 - 12/2014

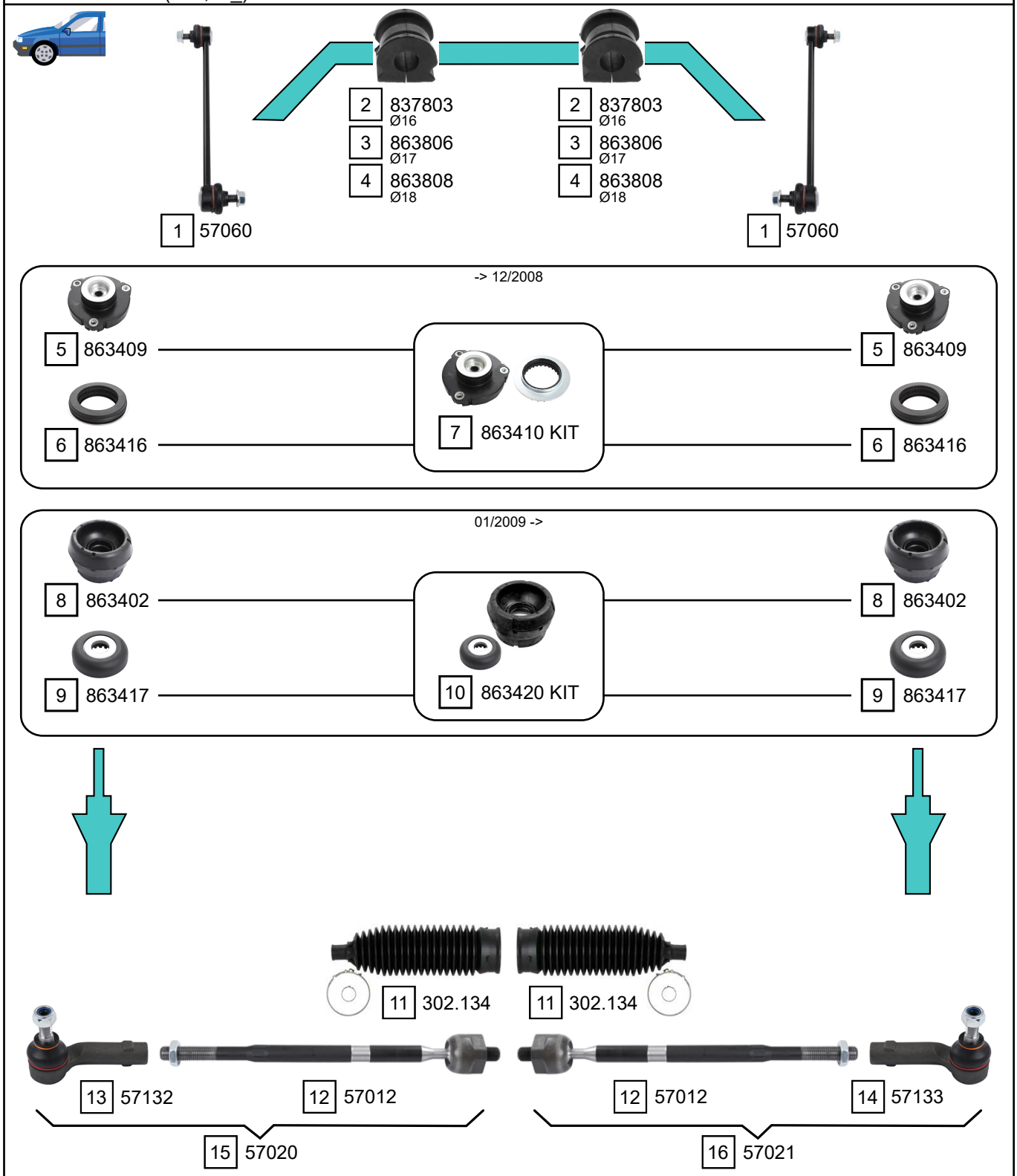

Ref.	Sidem Ref.	Description	OE-number	Measures	Ref.	Sidem Ref.	Description	OE-number	Measures
1	57060	stabiliser link	6R0 411 315	L:270	9	863417	bearing	1J0 412 249	di:14.3 do:45.3 L:13.4
2	837803	stabiliser mounting	6Q0 411 314 P	di:16	10	863420 KIT	strut mount kit	1J0 412 331 C S1	di:26 do:82 L:53
3	863806	stabiliser mounting	6Q0 411 314 Q	di:17	11	302.134	steering rack gaiter	6Q0 423 831 D	D:48 d:14 L:205
4	863808	stabiliser mounting	6Q0 411 314 R	di:18	12	57012	axial joint	Part of	th:MM14X1.5R L:297
5	863409	strut mount	6N0 412 331 E	di:14.3 do:66 L:49	13	57132	tie rod end left	6R0 423 811	c:13.4 th:FM14x1.5R
6	863416	bearing	1K0 412 249 B	di:68.5 do:112 L:25.5	14	57133	tie rod end right	6R0 423 812	c:13.4 th:FM14x1.5R
7	863410 KIT	strut mount kit	6N0 412 331 E S2	di:14.3	15	57020	tie rod left	6Q0 423 803 P	c:13.4
8	863402	strut mount	1J0 412 331 C	di:26 do:82 L:53	16	57021	tie rod right	6Q0 423 804 P	c:13.4

Copyright 2021

FABIA II (542,5J_) 12/2006 - 12/2014
FABIA II COMBI (545,5J_) 10/2007 - 12/2014

-> 03/2008
-> 5J-83172973* / -> 5J-8A502656* / -> 5J-8B503031* / -> 5J-8K450960*

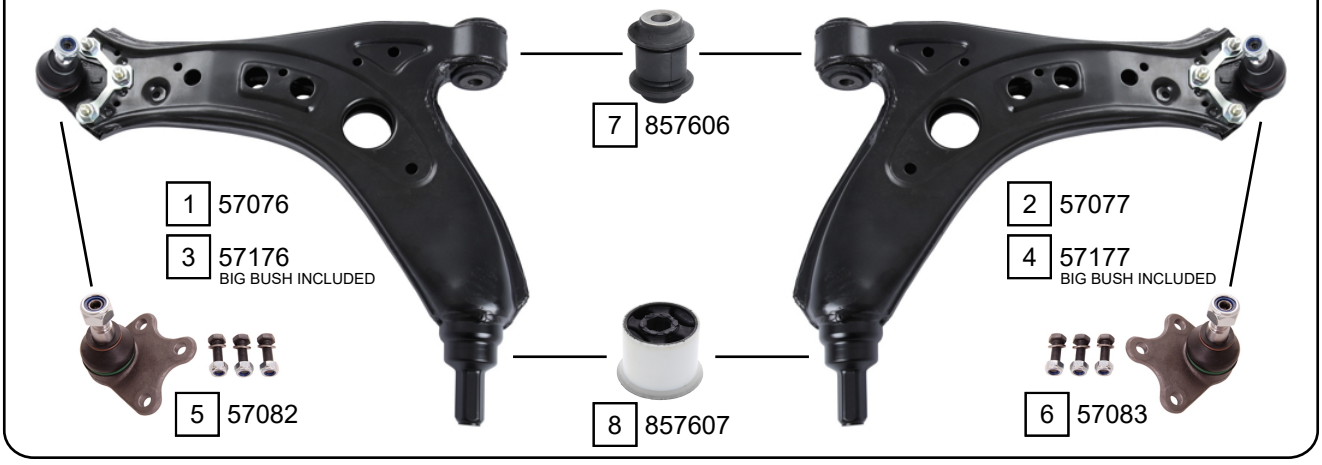

04/2008 ->
5J-83172974* -> / 5J-8A502657* -> / 5J-8B503032* -> / 5J-8K450961* ->

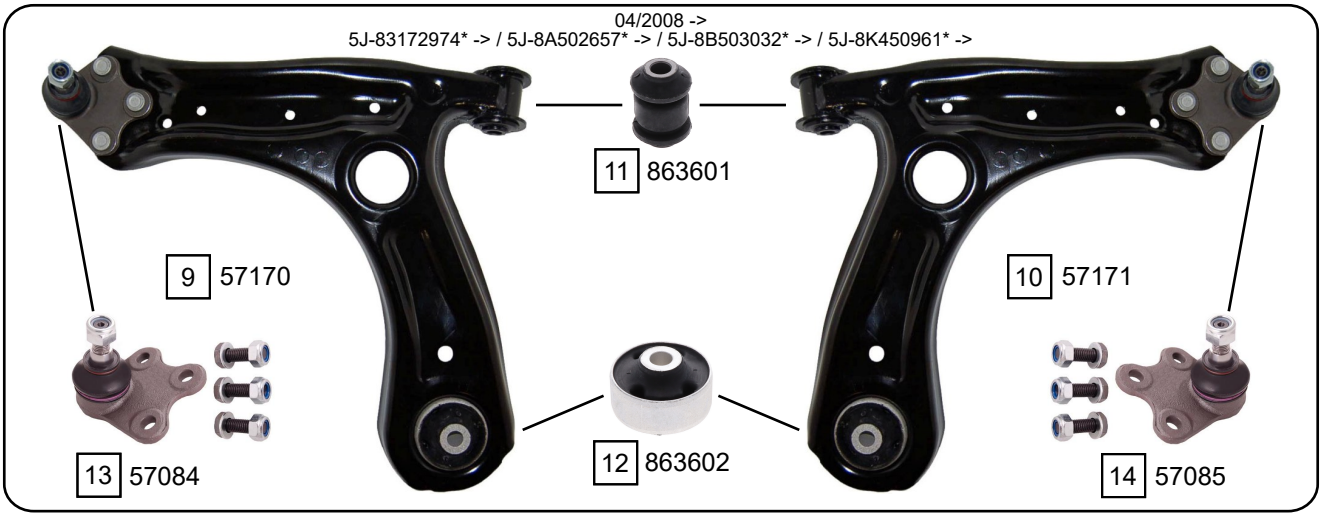

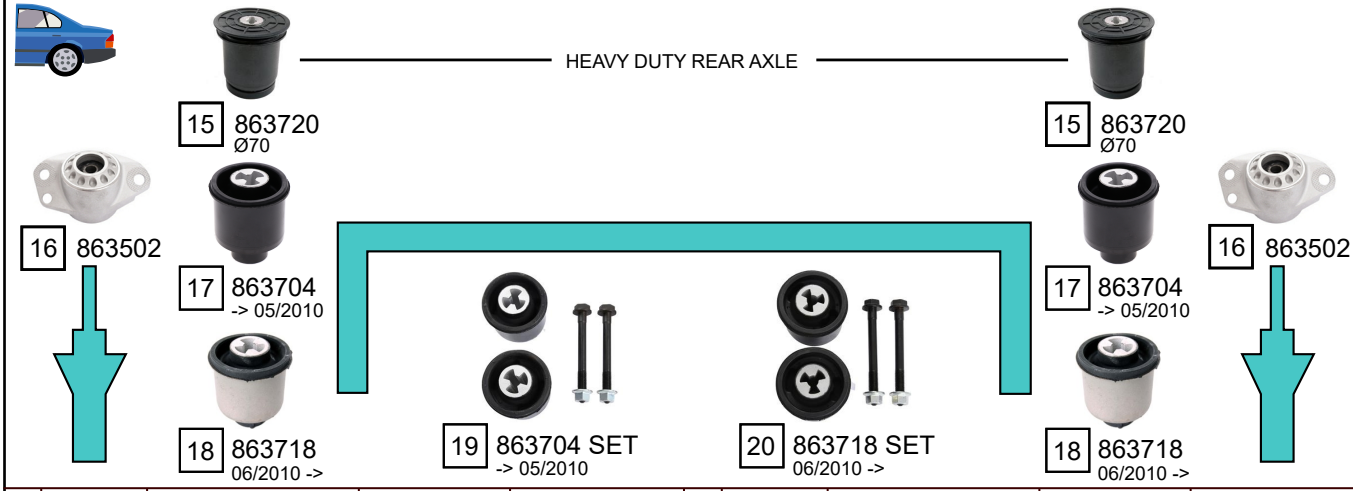

Ref.	Sidem Ref.	Description	OE-number	Measures	Ref.	Sidem Ref.	Description	OE-number	Measures
1	57076	TCA left wbj	6Q0 407 151 L S1	c:14.8	11	863601	silentblock for TCA	357 407 182	di:12 do:32.6 (*)
2	57077	TCA right wbj	6Q0 407 151 L S2	c:14.8	12	863602	silentblock for TCA	1J0 407 181	di:13 do:60 (*)
3	57176	TCA left wbj	6Q0 407 151 L S3	c:14.8	13	57084	ball joint left	6R0 407 365 A	c:14.9
4	57177	TCA right wbj	6Q0 407 151 L S4	c:14.8	14	57085	ball joint right	6R0 407 366 A	c:14.9
5	857606	silentblock for TCA	6Q0 407 182 A	di:12.1 do:32 (*)	15	863720	mounting axle body	6Q0 501 541 E	di:12.1 do:70
6	857607	silentblock for TCA	1K0 407 183 E	di:18.5 do:64 (*)	16	863502	strut mount	6R0 513 353	di:11.1 do:62 L:58.8
7	57082	ball joint	6Q0 407 365 A	c:14.8	17	863704	mounting axle body	1J0 501 541 C	di:12 do:71.5
8	57083	ball joint	6Q0 407 366 A	c:14.8	18	863718	mounting axle body	6R0 501 541 A	do:71.6
9	57170	TCA left wbj	6R0 407 151	c:15	19	863704 SET	mounting axle body set	1J0 501 541 C S1	do:71.5
10	57171	TCA right wbj	6R0 407 152	c:15	20	863718 SET	mounting axle body set	6R0 501 541 A S1	di:12 do:71.6

Copyright 2021

SKODA
FABIA

FABIA I (NJ3) 08/2014 ->
FABIA I COMBI (NJ5) 10/2014 ->

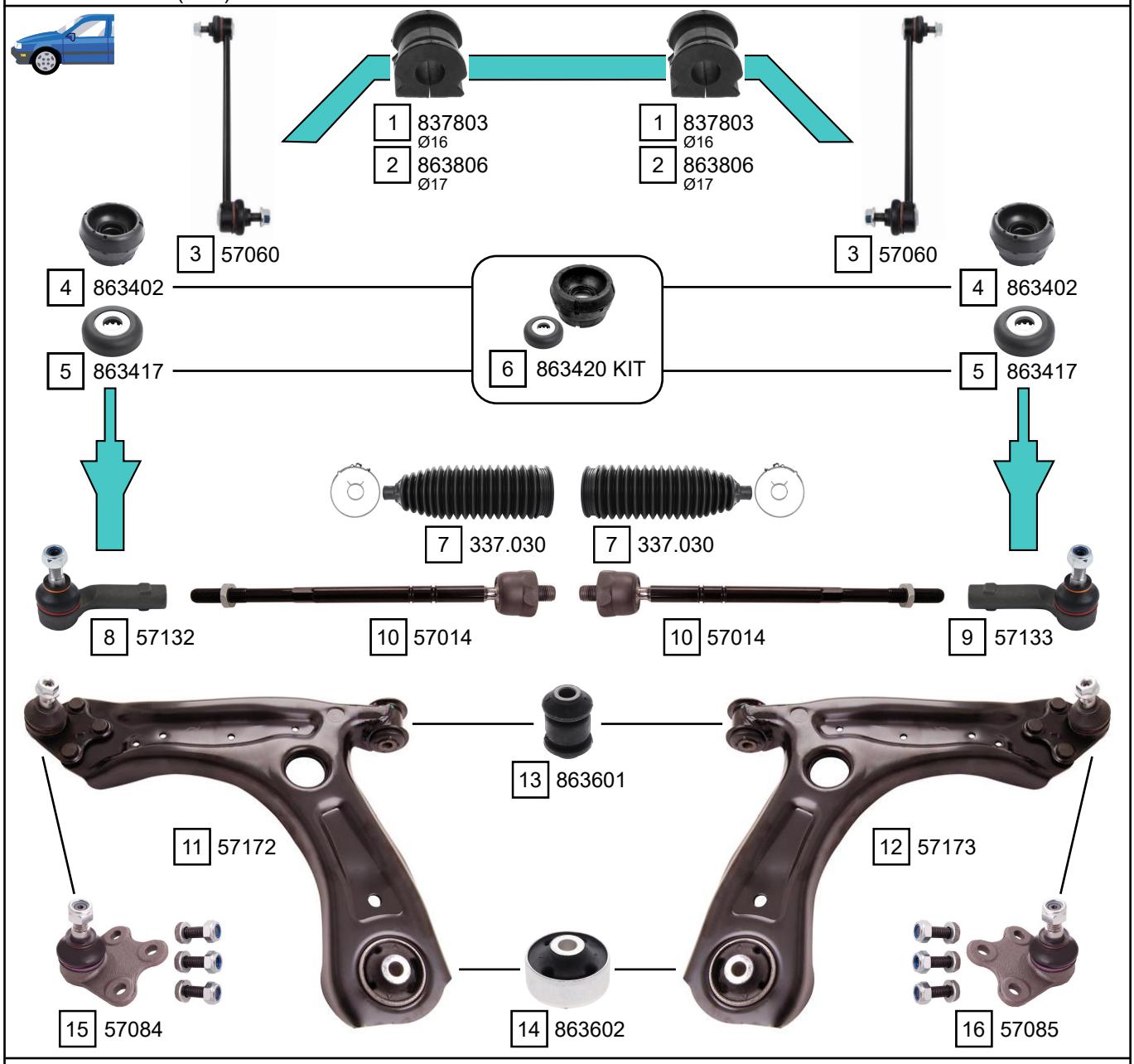

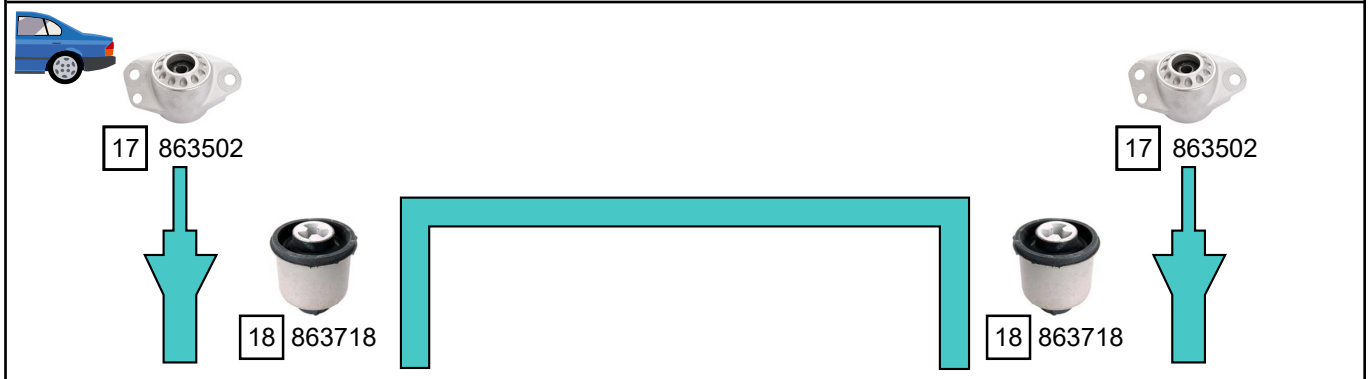

Ref.	Sidem Ref.	Description	OE-number	Measures	Ref.	Sidem Ref.	Description	OE-number	Measures
1	837803	stabiliser mounting	6Q0 411 314 P	di:16	10	57014	axial joint	6C0 423 810 C	th:MM14X1.5R L:312
2	863806	stabiliser mounting	6Q0 411 314 Q	di:17	11	57172	TCA left wbj	6R0 407 151 F	c:14.9
3	57060	stabiliser link	6R0 411 315	L:270	12	57173	TCA right wbj	6R0 407 152 F	c:14.9
4	863402	strut mount	1J0 412 331 C	di:26 do:82 L:53	13	863601	silentblock for TCA	357 407 182	di:12 do:32.6 (*)
5	863417	bearing	1J0 412 249	di:14.3 do:45.3 L:13.4	14	863602	silentblock for TCA	1J0 407 181	di:13 do:60 (*)
6	863420 KIT	strut mount kit	1J0 412 331 C S1	di:26 do:82 L:53	15	57084	ball joint left	6R0 407 365 A	c:14.9
7	337.030	steering rack gaiter	6C0 423 831 B	D:51 d:13.5 L:191	16	57085	ball joint right	6R0 407 366 A	c:14.9
8	57132	tie rod end left	6R0 423 811	c:13.4 th:FM14x1.5R	17	863502	strut mount	6R0 513 353	di:11.1 do:62 L:58.8
9	57133	tie rod end right	6R0 423 812	c:13.4 th:FM14x1.5R	18	863718	mounting axle body	6R0 501 541 A	do:71.6

Copyright 2021

FAVORIT (781)	05/1989 - 09/1994
FAVORIT FORMAN (785)	08/1991 - 06/1995
FAVORIT PICKUP (787)	06/1992 - 06/1997

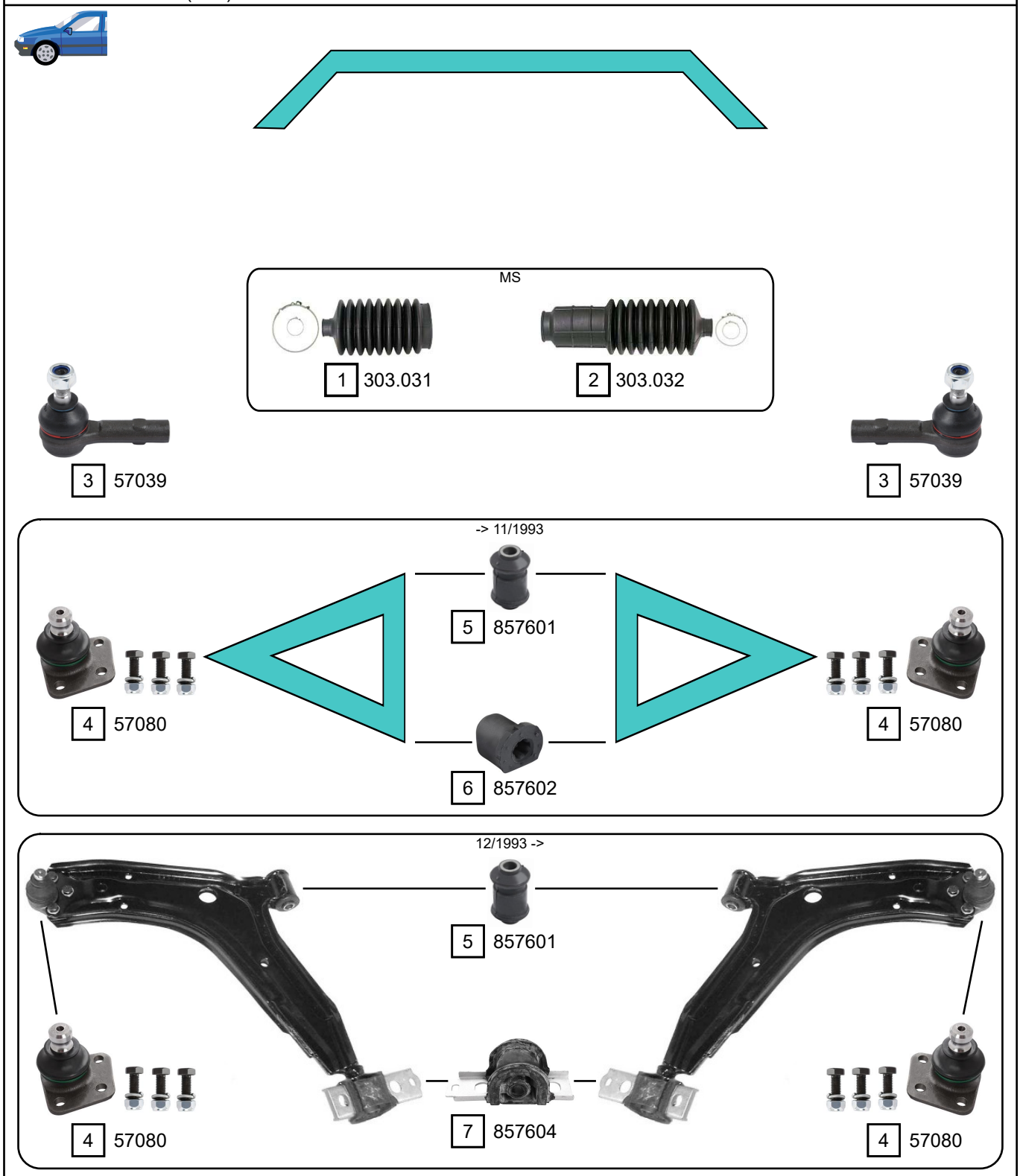

Ref.	Sidem Ref.	Description	OE-number	Measures	Ref.	Sidem Ref.	Description	OE-number	Measures
1	303.031	steering rack gaiter	114 509 822	D:42 d:10 L:125	5	857601	silentblock for TCA	6U0 407 182	di:12.1 do:31.5 (*)
2	303.032	steering rack gaiter	114 509 823	D:26 d:10 L:165	6	857602	silentblock for TCA	115 422 291	di:13.3 (*)
3	57039	tie rod end	6U0 422 811	c:12.6 th:FM12x1R	7	857604	silentblock for TCA	115 422 292	di:18.1 (*)
4	57080	ball joint	6U0 407 365	c:17					

Copyright 2021

SKODA
FELICIA

SIDEM
Experts know why

FELICIA (6U1)	10/1994 - 06/2001
COMBI (6U5)	07/1995 - 06/2001
PICK UP (6U6,6U7,6UF)	10/1995 - 04/2002

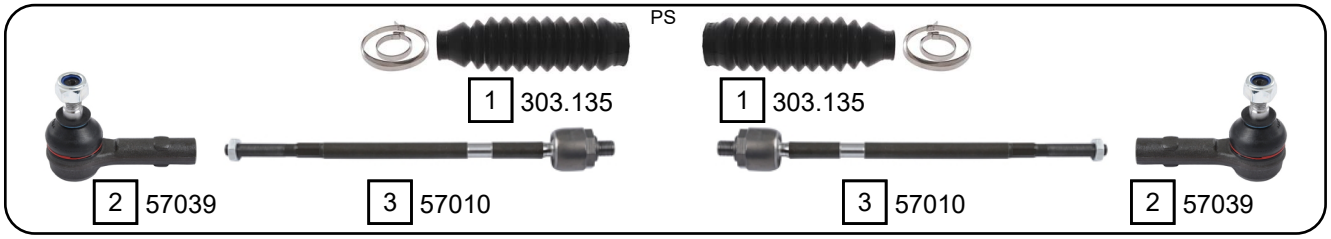

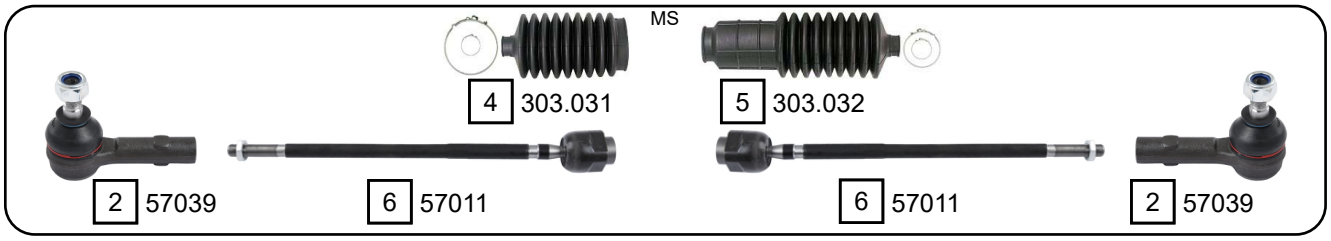

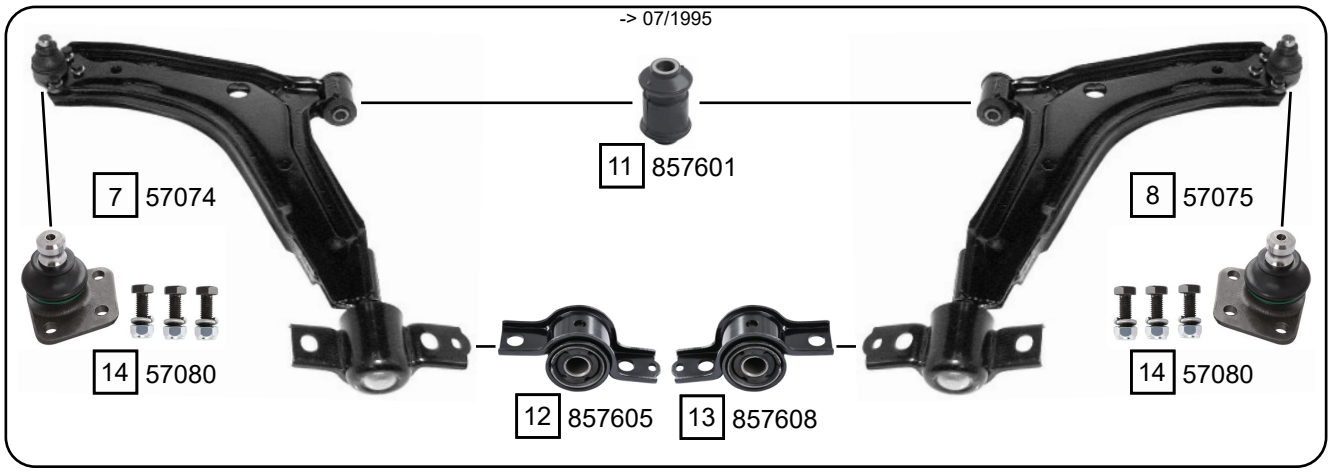

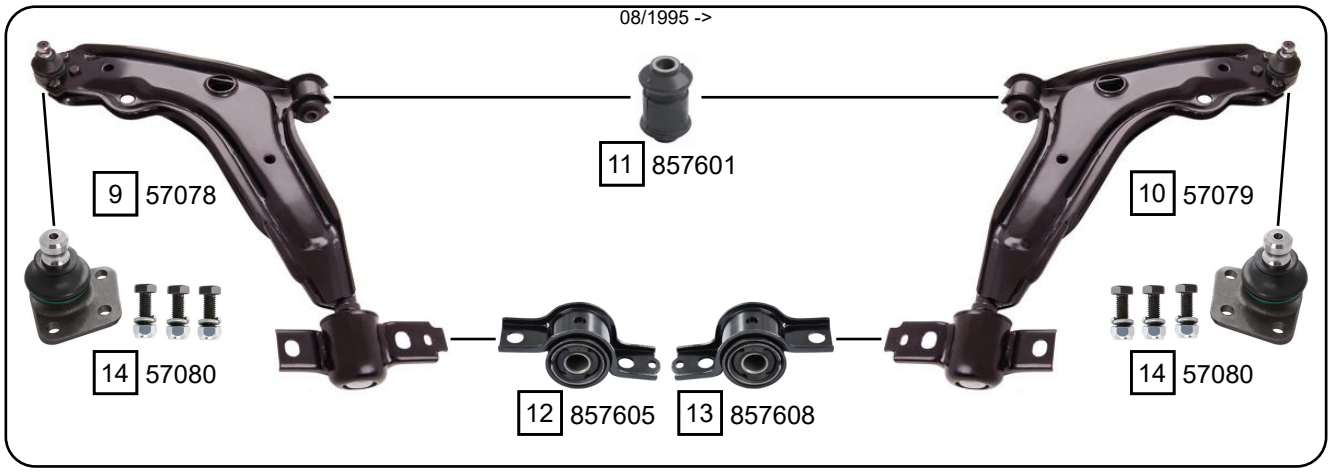

Ref.	Sidem Ref.	Description	OE-number	Measures	Ref.	Sidem Ref.	Description	OE-number	Measures
1	303.135	steering rack gaiter	6N0 422 831	D:42 d:11 L:208	8	57075	TCA right wbj	6U0 407 152 B	c:17
2	57039	tie rod end	6U0 422 811	c:12.6 th:FM12x1R	9	57078	TCA left wbj	6U0 407 151 A	c:17
3	57010	axial joint	6U0 422 807	th:MM14X1.5R L:324	10	57079	TCA right wbj	6U0 407 152 A	c:17
4	303.031	steering rack gaiter	114 509 822	D:42 d:10 L:125	11	857601	silentblock for TCA	6U0 407 182	di:12.1 do:31.5 (*)
5	303.032	steering rack gaiter	114 509 823	D:26 d:10 L:165	12	857605	silentblock for TCA	6U6 407 359 A	di:18.1 (*)
6	57011	axial joint	007 350 278 N	th:FM14x1.5R L:360	13	857608	silentblock for TCA	6U6 407 360 A	di:18.1 (*)
7	57074	TCA left wbj	6U0 407 151 B	c:17	14	57080	ball joint	6U0 407 365	c:17

Copyright 2021

KAMIQ (NW4) 07/2019 ->

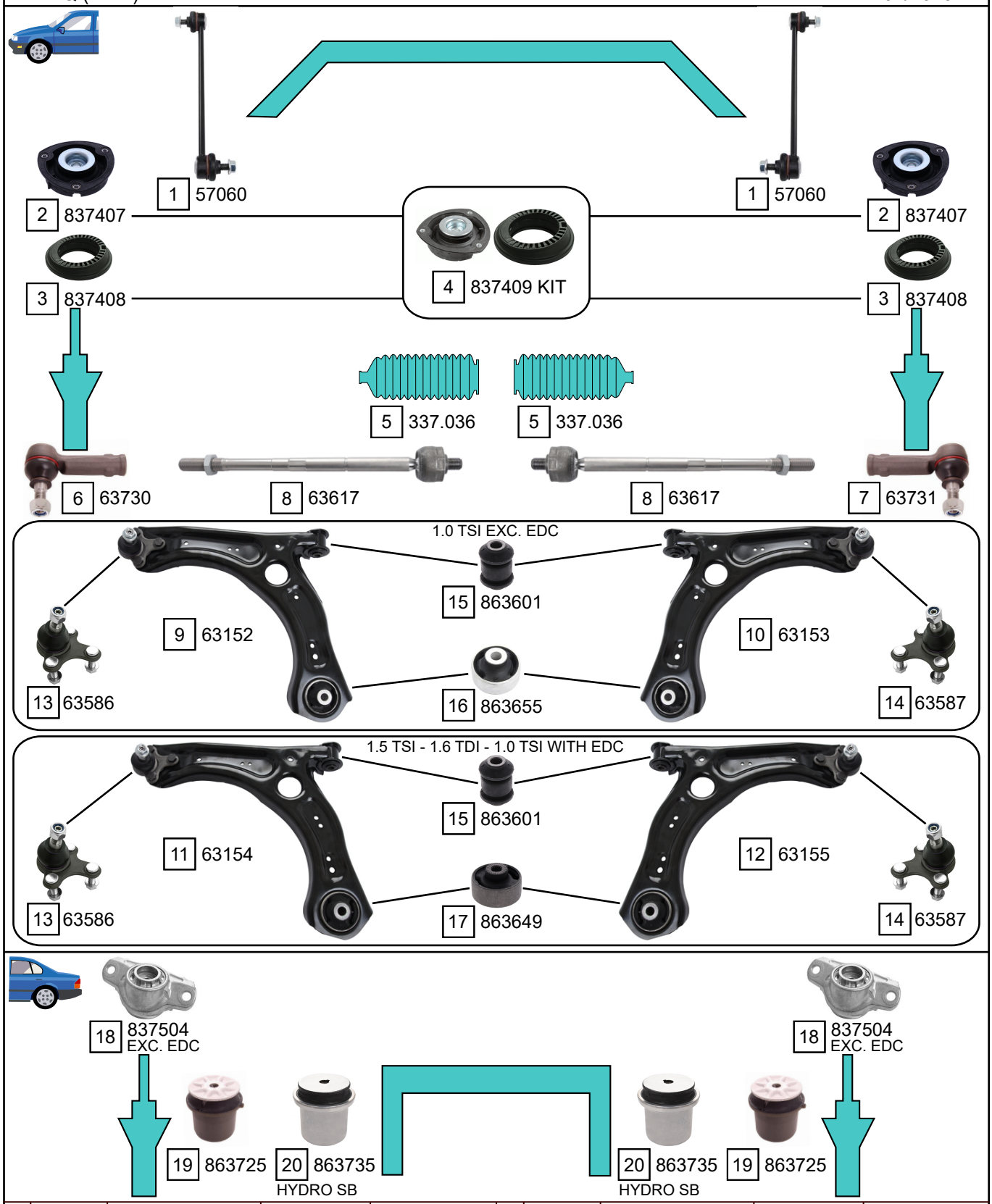

Ref.	Sidem Ref.	Description	OE-number	Measures	Ref.	Sidem Ref.	Description	OE-number	Measures
1	57060	stabiliser link	6R0 411 315	L:270	11	63154	TCA left wbj	2Q0 407 151 E S1	c:15.4
2	837407	strut mount	5Q0 412 331 E	di:14.6 do:64.1 L:42	12	63155	TCA right wbj	2Q0 407 152 E S1	c:15.4
3	837408	bearing	5Q0 412 249 F	di:74 do:127 L:38.6	13	63586	ball joint left	1K0 407 365 C	c:15.4
4	837409 KIT	strut mount kit	5Q0 412 331 E S1	di:14.6 do:127	14	63587	ball joint right	1K0 407 366 C	c:15.4
5	337.036	steering rack gaiter	2Q0 423 831	D:54.5 d:14.5 L:192	15	863601	silentblock for TCA	357 407 182	di:12 do:32.6 (*)
6	63730	tie rod end left	1K0 423 811 J S1	c:13.2 th:FM16x1.5R	16	863655	silentblock for TCA	2Q0 407 183 B	di:12.9 do:60.5 (*)
7	63731	tie rod end right	1K0 423 812 J S1	c:13.2 th:FM16x1.5R	17	863649	silentblock for TCA	5Q0 407 183 E	di:12.9 do:65 (*)
8	63617	axial joint	2Q0 423 810 D	th:MM14X1.5R L:315	18	837504	strut mount	5Q0 513 353 H	di:11.2 do:56.5 L:60.7
9	63152	TCA left wbj	2Q0 407 151 D S1	c:15.4	19	863725	mounting axle body	5Q0 501 541 C	di:12.5 do:72
10	63153	TCA right wbj	2Q0 407 152 D S1	c:15.4	20	863735	mounting axle body	5Q0 501 541 E	di:12.2 do:70.1

Copyright 2021

SKODA
KAROQ

KAROQ (NU7) 07/2017 ->

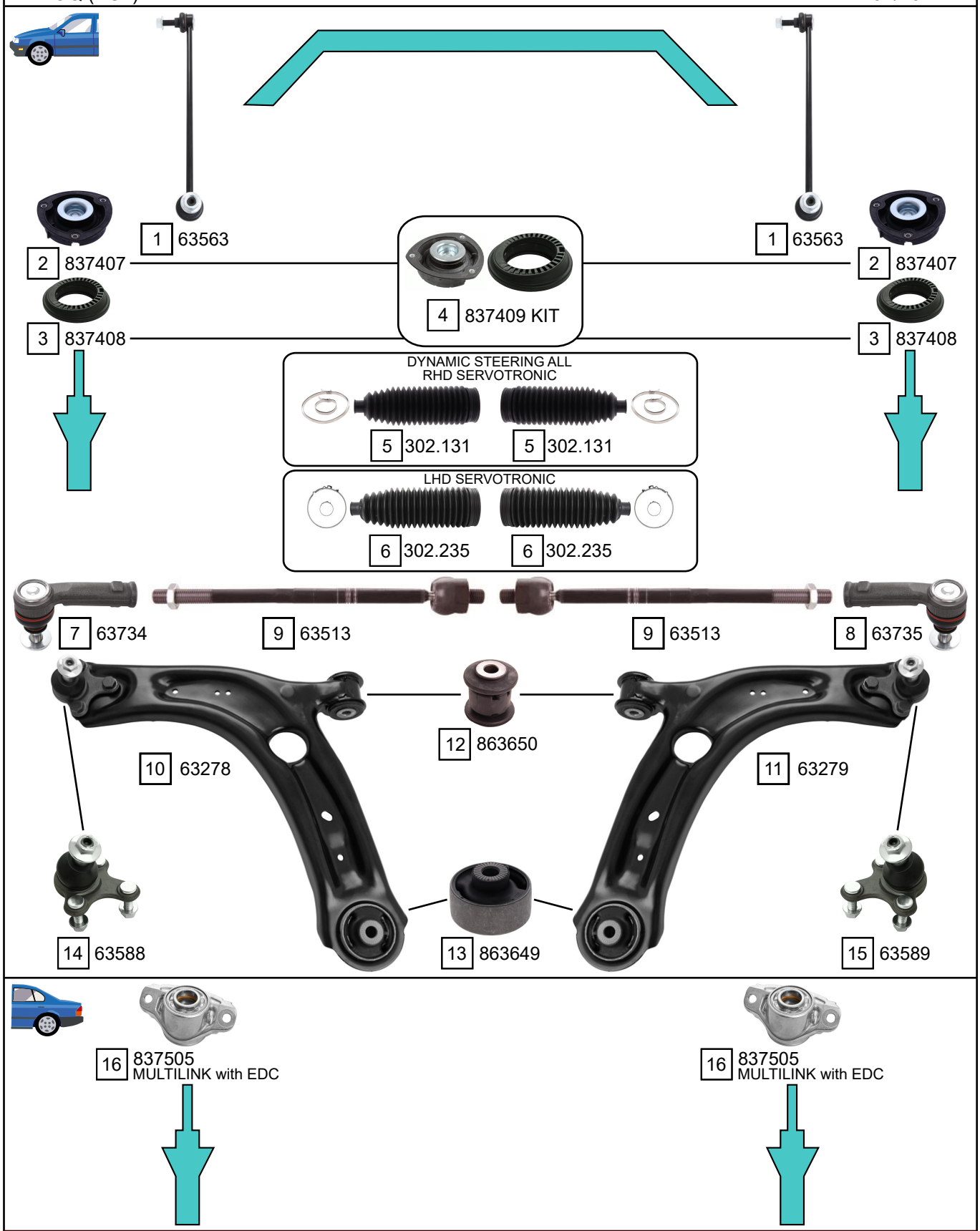

Ref.	Sidem Ref.	Description	OE-number	Measures	Ref.	Sidem Ref.	Description	OE-number	Measures
1	63563	stabiliser link	5Q0 411 315 A	L:335	9	63513	axial joint	561 423 810	th:MM16X1.5R L:330
2	837407	strut mount	5Q0 412 331 E	di:14.6 do:64.1 L:42	10	63278	TCA left wbj	3Q0 407 151 E S1	c:15.2
3	837408	bearing	5Q0 412 249 F	di:74 do:127 L:38.6	11	63279	TCA right wbj	3Q0 407 152 E S1	c:15.2
4	837409 KIT	strut mount kit	5Q0 412 331 E S1	di:14.6 do:127	12	863650	silentblock for TCA	5Q0 407 182 A	di:12.1 do:40.1 (*)
5	302.131	steering rack gaiter	1K0 423 831 A	D:50 d:15 L:193	13	863649	silentblock for TCA	5Q0 407 183 E	di:12.9 do:65 (*)
6	302.235	steering rack gaiter	5Q0 423 831	D:53.5 d:15.5 L:191	14	63588	ball joint left	3C0 407 365 B	c:15.2
7	63734	tie rod end left	1K0 423 811 J S2	c:13.2 th:FM16X1.5R	15	63589	ball joint right	3C0 407 366 B	c:15.2
8	63735	tie rod end right	1K0 423 812 J S2	c:13.2 th:FM16X1.5R	16	837505	strut mount	5Q0 513 353 G	di:10.2 do:65.8 L:63.3

Copyright 2021

KAROQ (NU7) 07/2017 ->

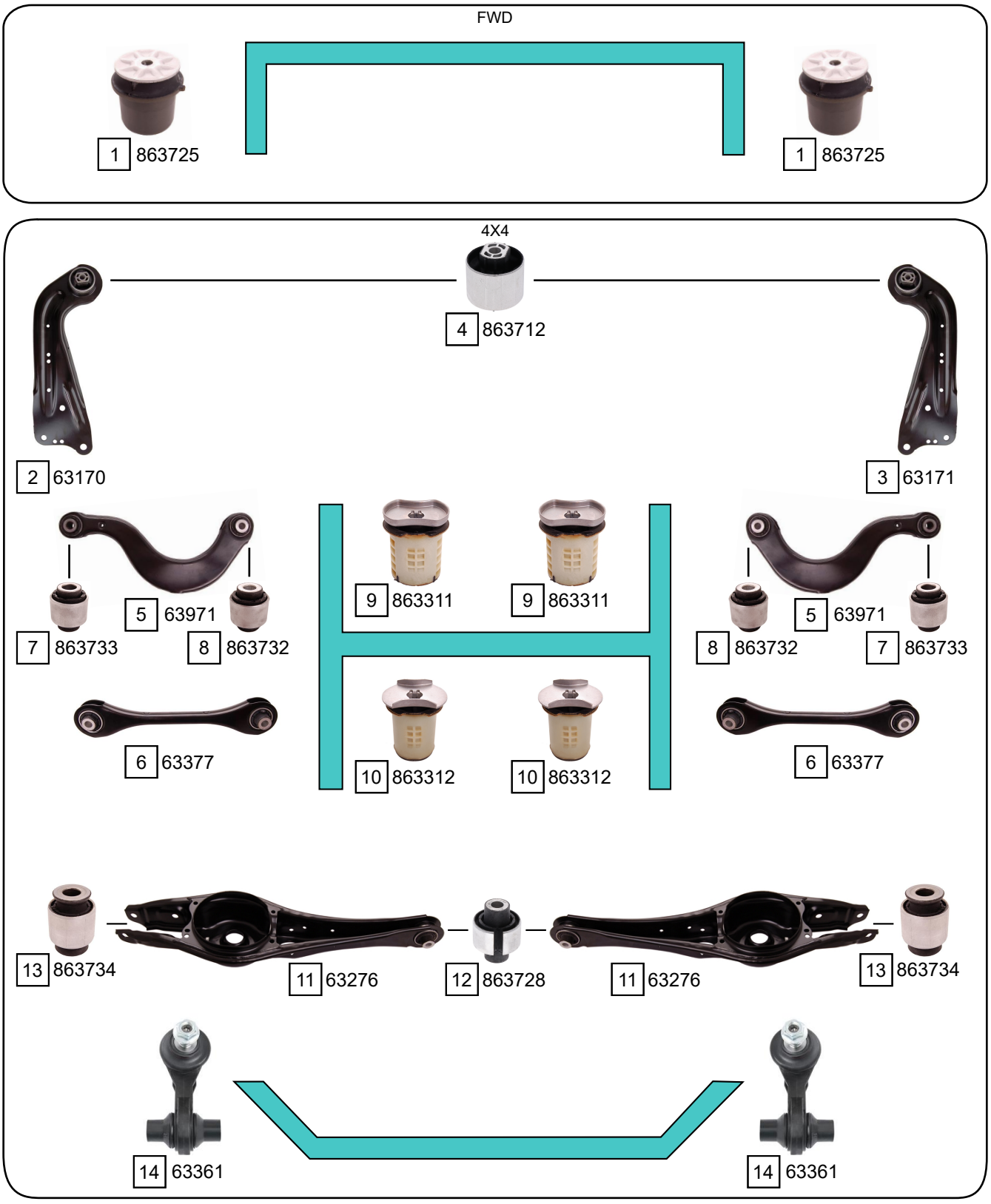

Ref.	Sidem Ref.	Description	OE-number	Measures	Ref.	Sidem Ref.	Description	OE-number	Measures
1	863725	mounting axle body	5Q0 501 541 C	di:12.5 do:72	8	863732	silentblock for TCA	Part of	di:12.1 do:38.3 (*)
2	63170	TCA left	5Q0 505 223 D	L:384	9	863311	mounting axle body	5Q0 505 145 F	di:18.2 do:61.5
3	63171	TCA right	5Q0 505 224 D	L:384	10	863312	mounting axle body	5Q0 505 145 E	di:18.6 do:53.5
4	863712	silentblock for TCA	1K0 505 541 B	di:12.2 do:60.2 (*)	11	63276	TCA	5Q0 505 311 D	
5	63971	track rod	5Q0 505 323 C	L:305	12	863728	silentblock for TCA	Part of	di:12 do:44.3 (*)
6	63377	track rod	5Q0 501 529 F	L:282	13	863734	silentblock for TCA	5Q0 505 553 A	di:12.4 do:36.4 (*)
7	863733	silentblock for TCA	Part of	di:14.3 do:38.2 (*)	14	63361	stabiliser link rear axle	5Q0 505 465 C	L:70

Copyright 2021

SKODA
KODIAQ

KODIAQ (NS7) 10/2016 ->

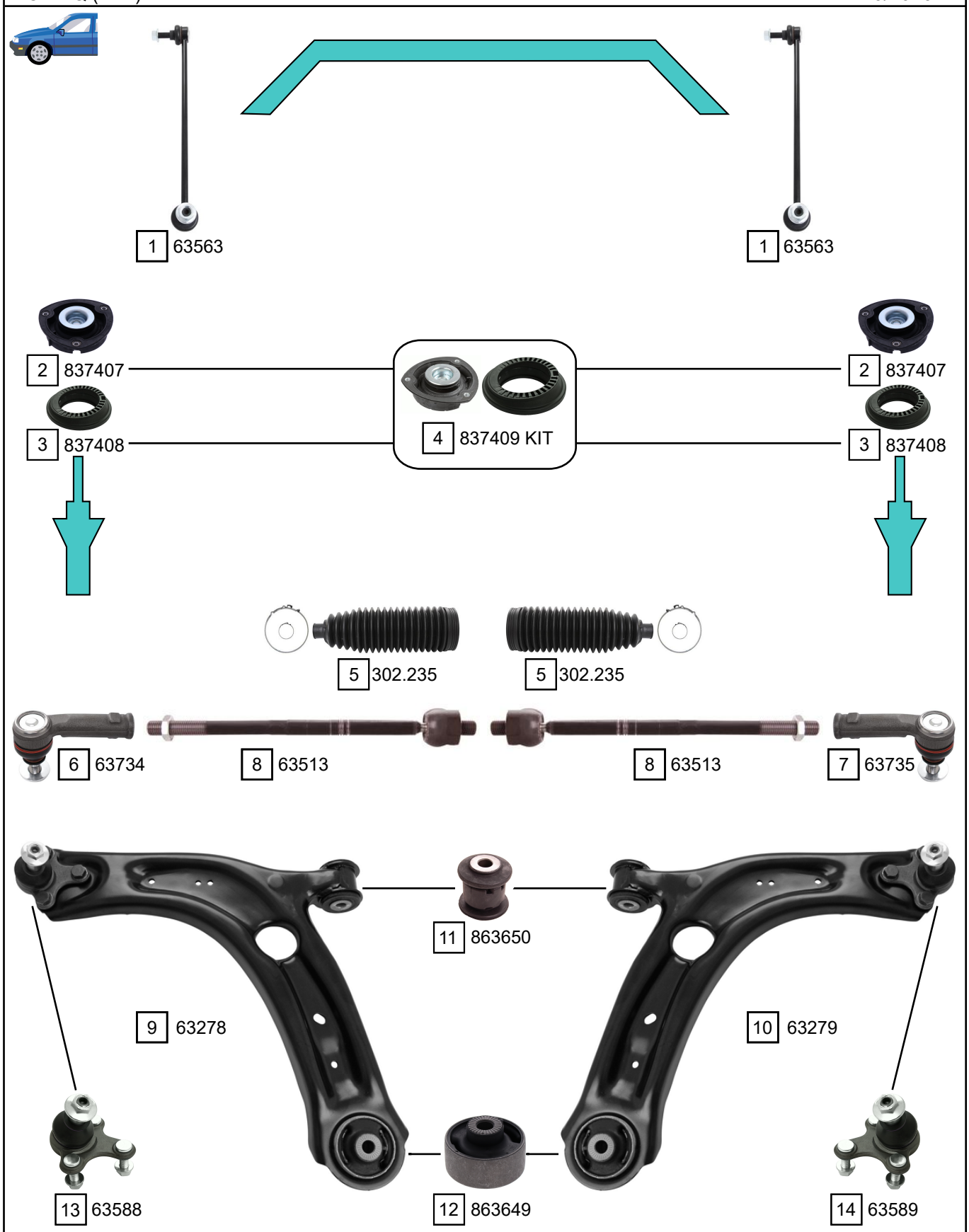

Ref.	Sidem Ref.	Description	OE-number	Measures	Ref.	Sidem Ref.	Description	OE-number	Measures
1	63563	stabiliser link	5Q0 411 315 A	L:335	8	63513	axial joint	561 423 810	th:MM16X1.5R L:330
2	837407	strut mount	5Q0 412 331 E	di:14.6 do:64.1 L:42	9	63278	TCA left wbj	3Q0 407 151 E S1	c:15.2
3	837408	bearing	5Q0 412 249 F	di:74 do:127 L:38.6	10	63279	TCA right wbj	3Q0 407 152 E S1	c:15.2
4	837409 KIT	strut mount kit	5Q0 412 331 E S1	di:14.6 do:127	11	863650	silentblock for TCA	5Q0 407 182 A	di:12.1 do:40.1 (*)
5	302.235	steering rack gaiter	5Q0 423 831	D:53.5 d:15.5 L:191	12	863649	silentblock for TCA	5Q0 407 183 E	di:12.9 do:65 (*)
6	63734	tie rod end left	1K0 423 811 J S2	c:13.2 th:FM16X1.5R	13	63588	ball joint left	3C0 407 365 B	c:15.2
7	63735	tie rod end right	1K0 423 812 J S2	c:13.2 th:FM16X1.5R	14	63589	ball joint right	3C0 407 366 B	c:15.2

Copyright 2021

KODIAQ (NS7) 10/2016 ->

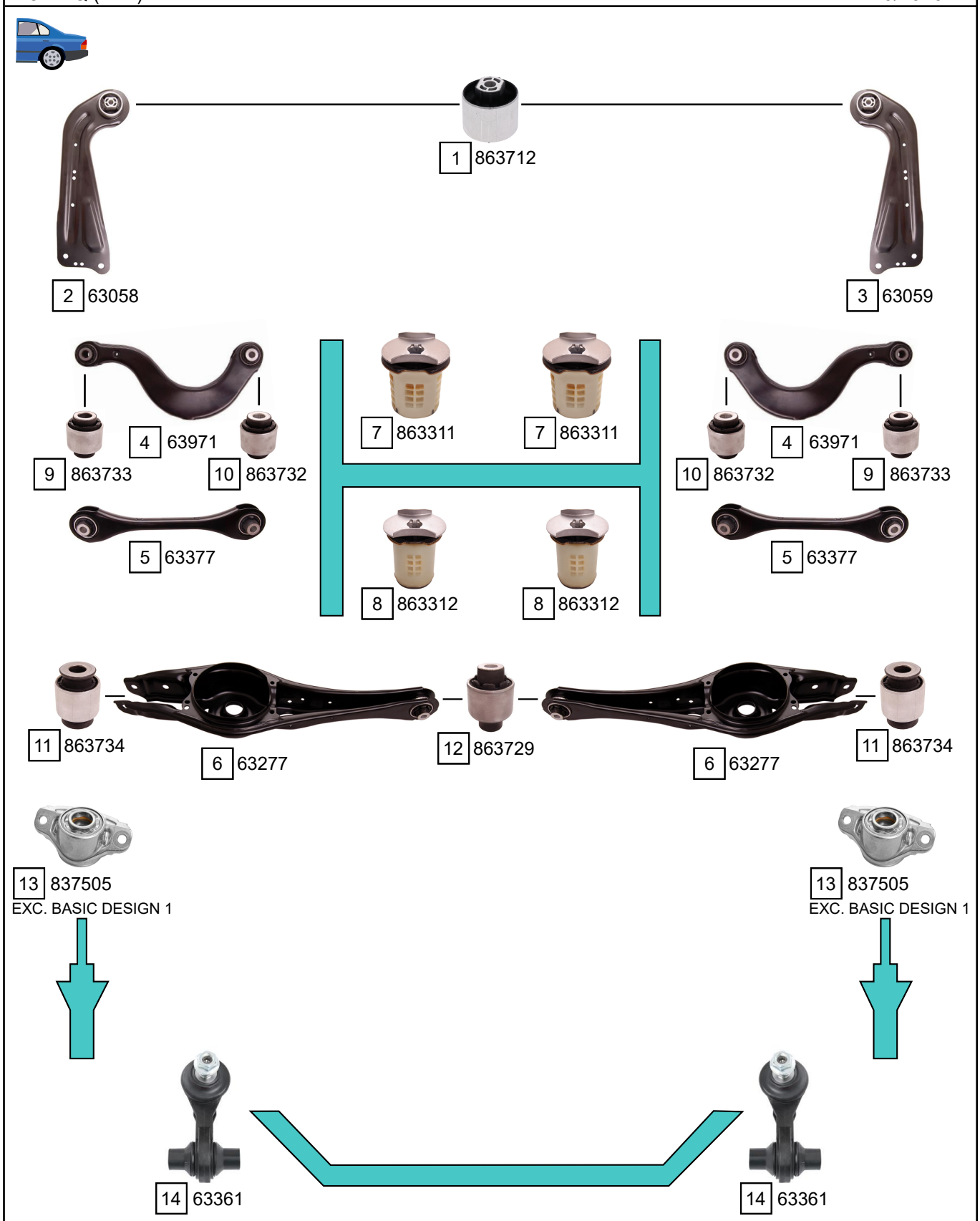

Ref.	Sidem Ref.	Description	OE-number	Measures	Ref.	Sidem Ref.	Description	OE-number	Measures
1	863712	silentblock for TCA	1K0 505 541 B	di:12.2 do:60.2 (*)	8	863312	mounting axle body	5Q0 505 145 E	di:18.6 do:53.5
2	63058	TCA left	5QF 505 223 C		9	863733	silentblock for TCA	Part of	di:14.3 do:38.2 (*)
3	63059	TCA right	5QF 505 224 C		10	863732	silentblock for TCA	Part of	di:12.1 do:38.3 (*)
4	63971	track rod	5Q0 505 323 C	L:305	11	863734	silentblock for TCA	5Q0 505 553 A	di:12.4 do:36.4 (*)
5	63377	track rod	5Q0 501 529 F	L:282	12	863729	silentblock for TCA	Part of	di:12.1 do:44.3 (*)
6	63277	TCA	3Q0 505 311 G		13	837505	strut mount	5Q0 513 353 G	di:10.2 do:65.8 L:63.3
7	863311	mounting axle body	5Q0 505 145 F	di:18.2 do:61.5	14	63361	stabiliser link rear axle	5Q0 505 465 C	L:70

Copyright 2021

SKODA
OCTAVIA

OCTAVIA II (1U2)
OCTAVIA II COMBI (1U5)

09/1996 - 12/2010

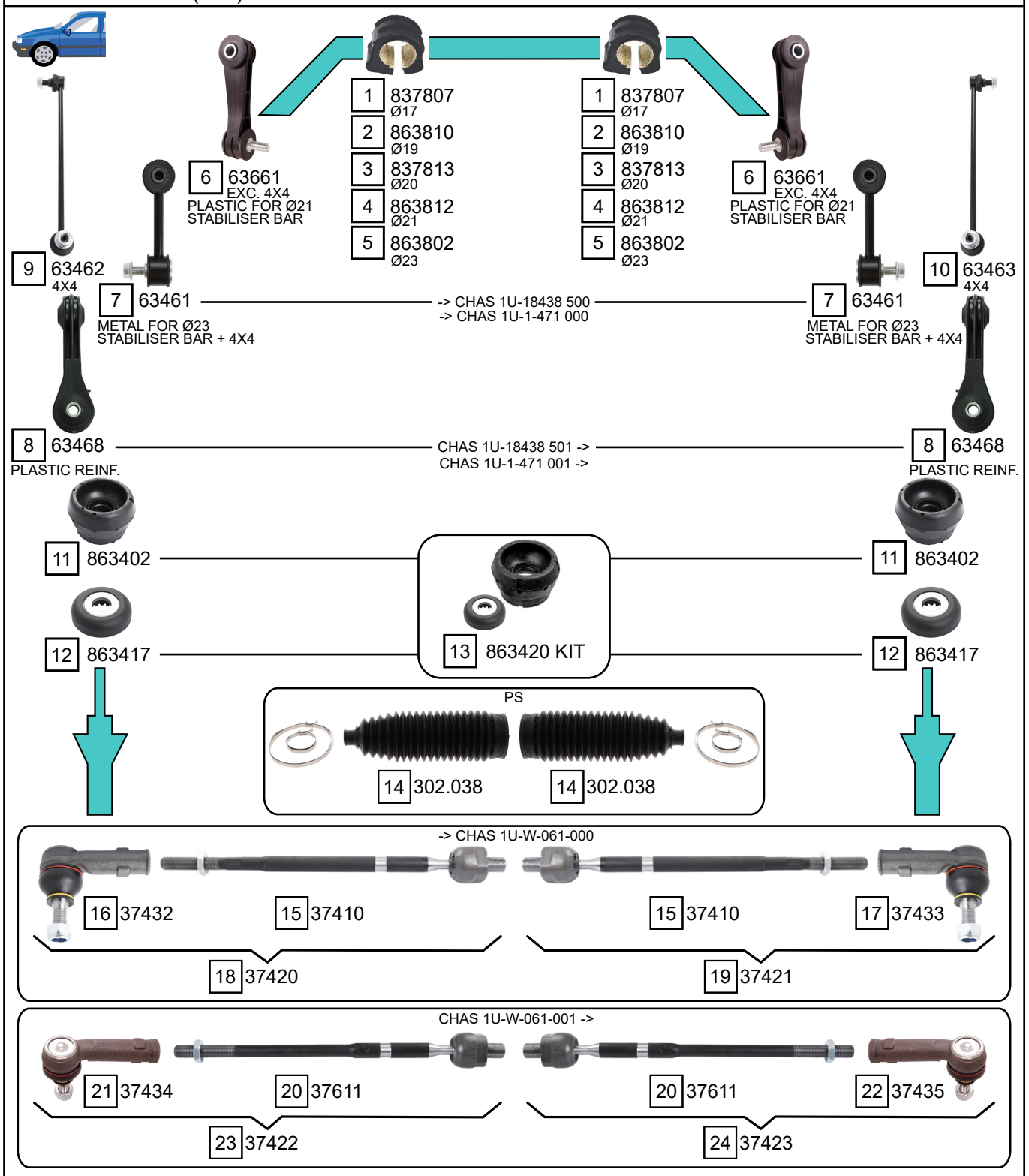

Ref.	Sidem Ref.	Description	OE-number	Measures	Ref.	Sidem Ref.	Description	OE-number	Measures
1	837807	stabiliser mounting	1J0 411 314 S	di:17	13	863420 KIT	strut mount kit	1J0 412 331 C S1	di:26 do:82 L:53
2	863810	stabiliser mounting	1J0 411 314 R	di:19	14	302.038	steering rack gaiter	1J0 422 831 B	D:50 d:15 L:186
3	837813	stabiliser mounting	1J0 411 314 P	di:19	15	37410	axial joint	Part of	th:MM16X1.5R L:338
4	863812	stabiliser mounting	1J0 411 314 T	di:21	16	37432	tie rod end left	1J0 422 811 A	c:13.3 th:FM14x1.5R
5	863802	stabiliser mounting	1J0 411 314 G	di:23	17	37433	tie rod end right	1J0 422 812 A	c:13.3 th:FM14x1.5R
6	63661	stabiliser link	1J0 411 315 J	L:105	18	37420	tie rod left	1J0 422 803 A	c:13.3
7	63461	stabiliser link	1J0 411 315 G	L:105	19	37421	tie rod right	1J0 422 804 A	c:13.3
8	63468	stabiliser link	1J0 411 315 K	L:105	20	37611	axial joint	Part of	th:MM16X1.5R L:319
9	63462	stabiliser link left	1J0 411 315 D	L:336	21	37434	tie rod end left	1J0 422 811 B	c:13.2 th:FM14x1.5R
10	63463	stabiliser link right	1J0 411 316 D	L:336	22	37435	tie rod end right	1J0 422 812 B	c:13.2 th:FM14x1.5R
11	863402	strut mount	1J0 412 331 C	di:26 do:82 L:53	23	37422	tie rod left	1J0 422 803 H	c:13.2
12	863417	bearing	1J0 412 249	di:14.3 do:45.3 L:13.4	24	37423	tie rod right	1J0 422 804 H	c:13.2

Copyright 2021

OCTAVIA II (1U2)
OCTAVIA II COMBI (1U5)

09/1996 - 12/2010

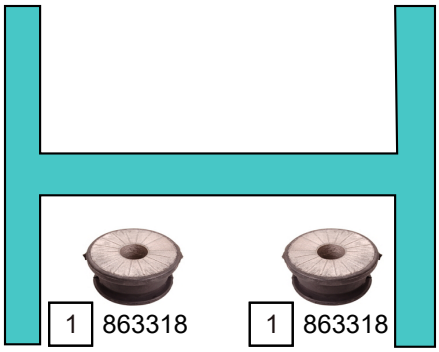

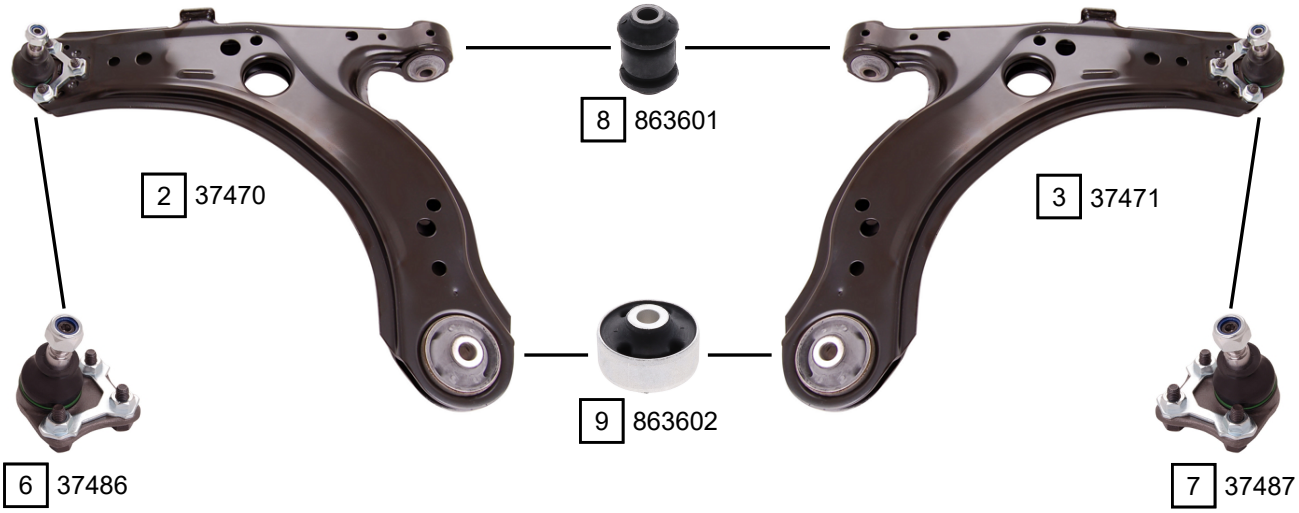

REINFORCED - ONLY REPLACE IN PAIRS

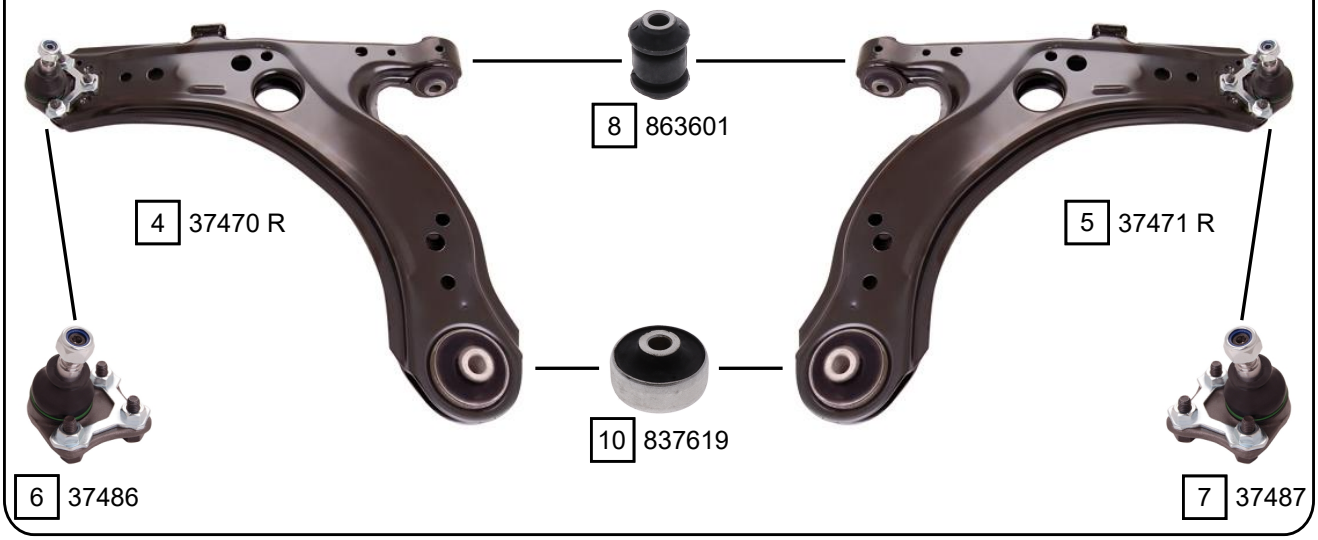

Ref.	Sidem Ref.	Description	OE-number	Measures	Ref.	Sidem Ref.	Description	OE-number	Measures
1	863318	mounting axle body	1J0 199 429	di:18.2 do:50.5	6	37486	ball joint left	1J0 407 365 J	c:14.9
2	37470	TCA left wbj	1J0 407 151 C S1	c:14.9	7	37487	ball joint right	1J0 407 366 J	c:14.9
3	37471	TCA right wbj	1J0 407 151 C S2	c:14.9	8	863601	silentblock for TCA	357 407 182	di:12 do:32.6 (*)
4	37470 R	TCA left wbj	1J0 407 151 C S1 R	c:14.9	9	863602	silentblock for TCA	1J0 407 181	di:13 do:60 (*)
5	37471 R	TCA right wbj	1J0 407 151 C S2 R	c:14.9	10	837619	silentblock for TCA	6R0 407 181 B	di:13.2 do:60.2 (*)

Copyright 2021

SKODA
OCTAVIA

OCTAVIA II (1U2)
OCTAVIA II COMBI (1U5)

09/1996 - 12/2010

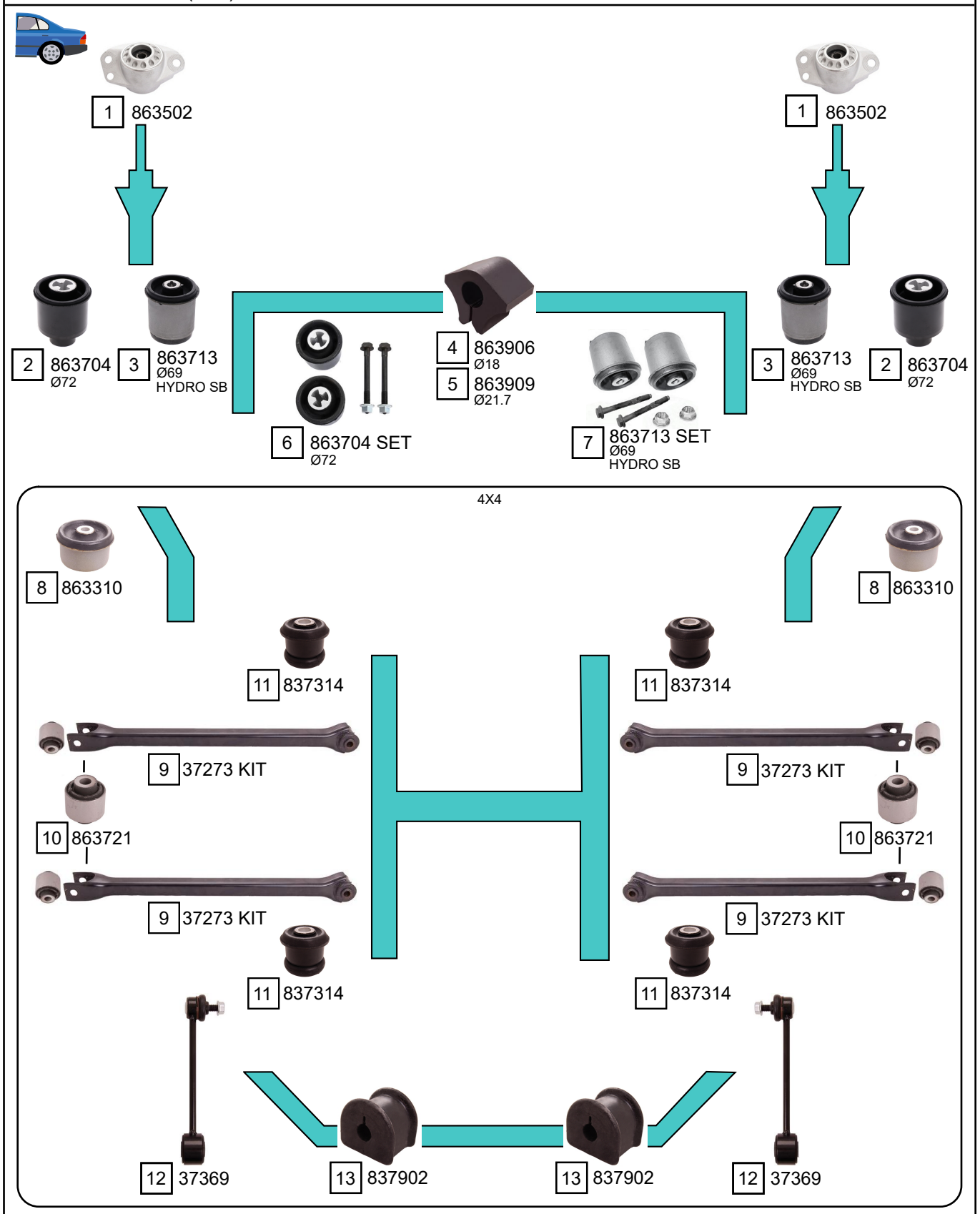

Ref.	Sidem Ref.	Description	OE-number	Measures	Ref.	Sidem Ref.	Description	OE-number	Measures
1	863502	strut mount	6R0 513 353	di:11.1 do:62 L:58.8	8	863310	mounting axle body	1J0 505 171 B	di:12 do:72
2	863704	mounting axle body	1J0 501 541 C	di:12 do:71.5	9	37273 KIT	track rod	1J0 505 323 L S1	L:517
3	863713	mounting axle body	1J0 501 541 D	di:13.2 do:69	10	863721	silentblock for TCA	1J0 505 203	di:12.3 do:43.6 (*)
4	863906	stabiliser mounting	871 511 423	di:16.5	11	837314	mounting axle body	1J0 505 145 B	di:16 do:51.6
5	863909	stabiliser mounting	1J0 511 423	di:18	12	37369	stabiliser link	1J0 505 466 C	L:194
6	863704 SET	mounting axle body set	1J0 501 541 C S1	do:71.5	13	837902	stabiliser mounting	8D0 511 327 C	di:10.5
7	863713 SET	mounting axle body set	1J0 501 541 D S1	do:69					

Copyright 2021

OCTAVIA III (1Z3)
OCTAVIA III COMBI (1Z5)

02/2004 - 03/2013

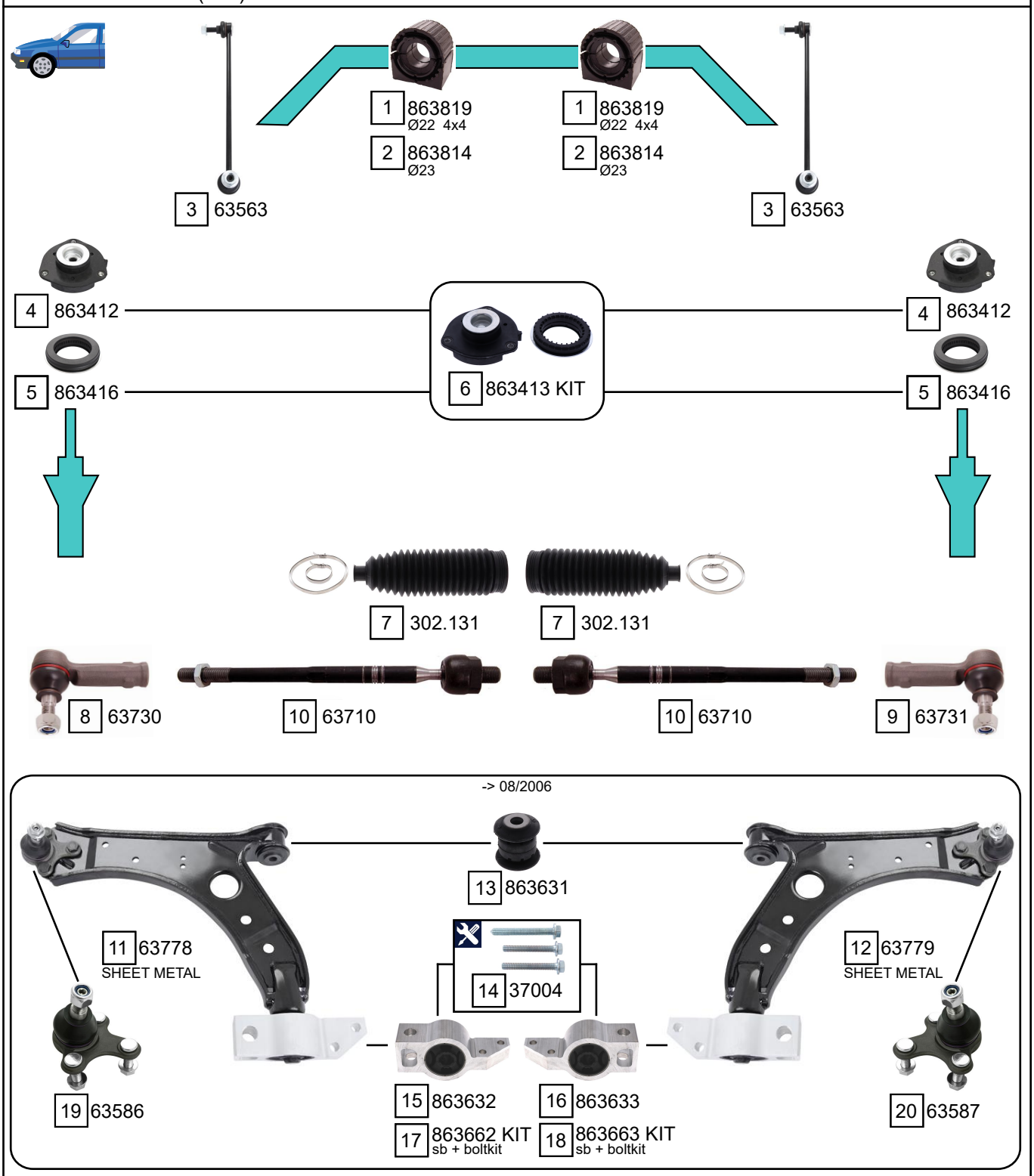

Ref.	Sidem Ref.	Description	OE-number	Measures	Ref.	Sidem Ref.	Description	OE-number	Measures
1	863819	stabiliser mounting	Part of	di:20	11	63778	TCA left wbj	1K0 407 151 AA S1	c:15.4
2	863814	stabiliser mounting	Part of	di:21	12	63779	TCA right wbj	1K0 407 152 AA S2	c:15.4
3	63563	stabiliser link	5Q0 411 315 A	L:335	13	863631	silentblock for TCA	1K0 407 182	di:12.1 do:40 (*)
4	863412	strut mount	1K0 412 331 B	di:14.2 L:49.5	14	37004	mounting kit	N 910 398 02 S1	th:M10x1.5R
5	863416	bearing	1K0 412 249 B	di:68.5 do:112 L:25.5	15	863632	silentblock for TCA	1K0 199 231 J	di:18.8 (*)
6	863413 KIT	strut mount kit	1K0 412 331 B S1	di:14.2 L:50	16	863633	silentblock for TCA	1K0 199 232 J	di:18.8 (*)
7	302.131	steering rack gaiter	1K0 423 831 A	D:50 d:15 L:193	17	863662 KIT	silentblock kit	1K0 199 231 J S1	
8	63730	tie rod end left	1K0 423 811 J S1	c:13.2 th:FM16x1.5R	18	863663 KIT	silentblock kit	1K0 199 232 J S1	
9	63731	tie rod end right	1K0 423 812 J S1	c:13.2 th:FM16x1.5R	19	63586	ball joint left	1K0 407 365 C	c:15.4
10	63710	axial joint	1K0 423 810 A	th:MM16X1.5R L:312	20	63587	ball joint right	1K0 407 366 C	c:15.4

Copyright 2021

SKODA
OCTAVIA

SIDEM
Experts know why

OCTAVIA III (1Z3)
OCTAVIA III COMBI (1Z5)

02/2004 - 03/2013

09/2006 ->

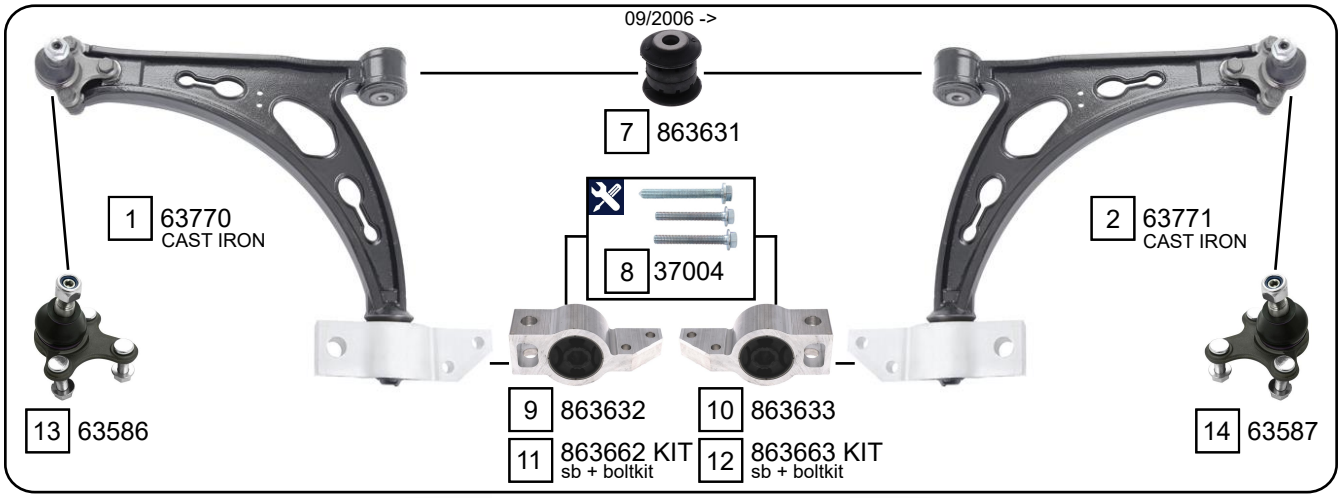

12/2010 ->

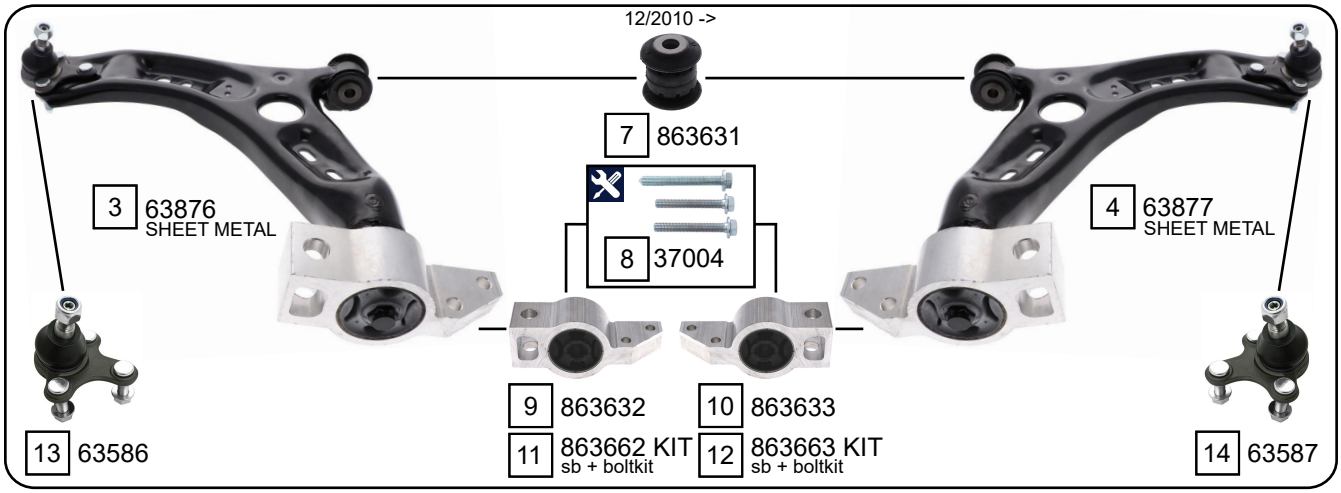

OCTAVIA TOUR

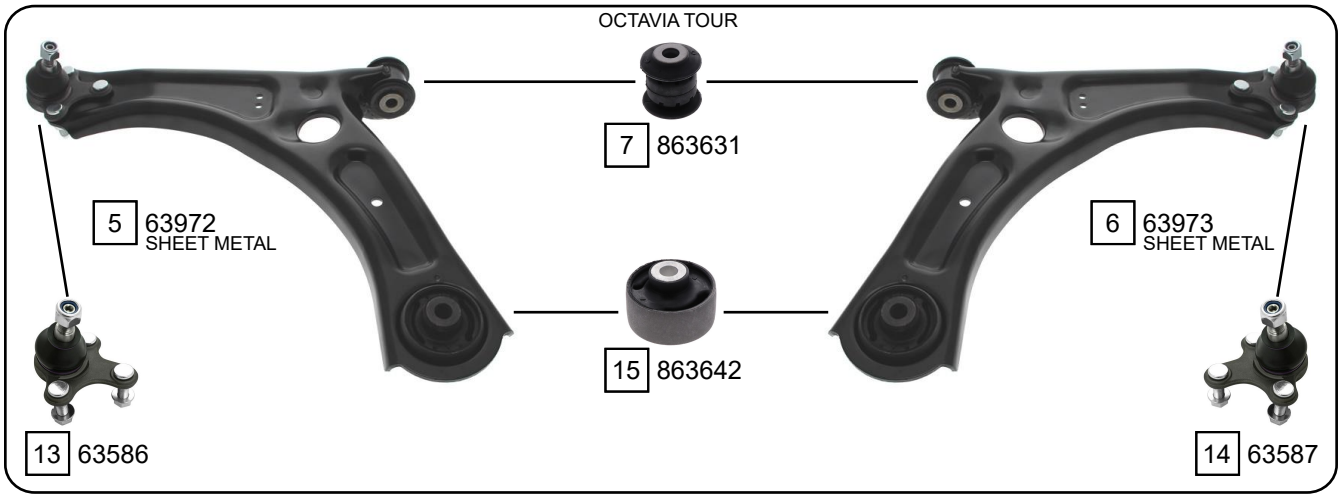

Ref.	Sidem Ref.	Description	OE-number	Measures	Ref.	Sidem Ref.	Description	OE-number	Measures
1	63770	TCA left wbj	1K0 407 151 T	c:15.4	9	863632	silentblock for TCA	1K0 199 231 J	di:18.8 (*)
2	63771	TCA right wbj	1K0 407 152 T	c:15.4	10	863633	silentblock for TCA	1K0 199 232 J	di:18.8 (*)
3	63876	TCA left wbj	1K0 407 151 BC S1	c:15.4	11	863662 KIT	silentblock kit	1K0 199 231 J S1	
4	63877	TCA right wbj	1K0 407 152 BC S2	c:15.4	12	863663 KIT	silentblock kit	1K0 199 232 J S1	
5	63972	TCA left wbj	1K0 407 151 BG	c:15.4	13	63586	ball joint left	1K0 407 365 C	c:15.4
6	63973	TCA right wbj	1K0 407 152 BG	c:15.4	14	63587	ball joint right	1K0 407 366 C	c:15.4
7	863631	silentblock for TCA	1K0 407 182	di:12.1 do:40 (*)	15	863642	silentblock for TCA	1K0 407 183 M	di:13.4 do:65 (*)
8	37004	mounting kit	N 910 398 02 S1	th:M10x1.5R					

Copyright 2021

OCTAVIA III (1Z3)
OCTAVIA III COMBI (1Z5)

02/2004 - 03/2013

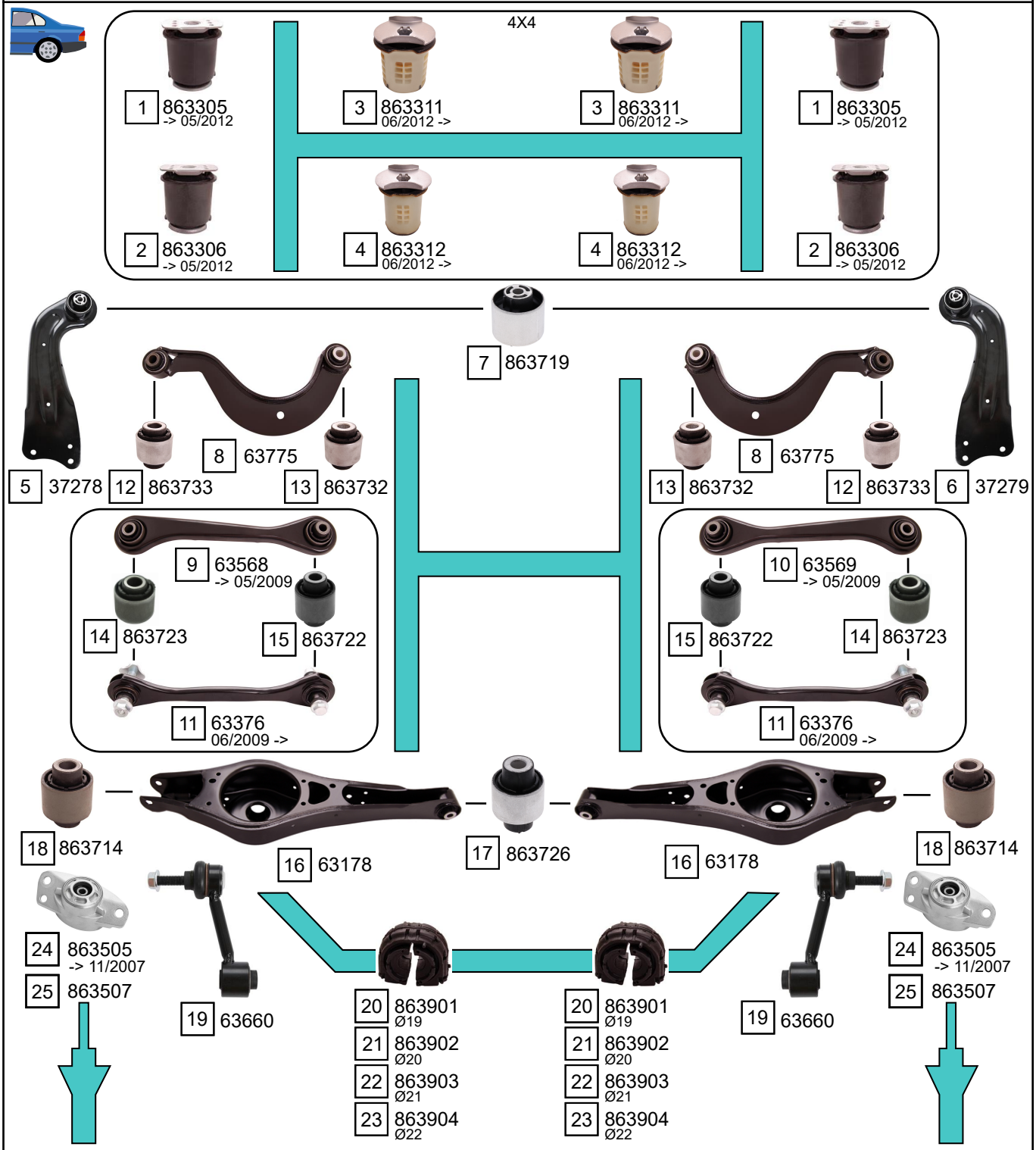

Ref.	Sidem Ref.	description	OE-number	measures	Ref.	Sidem Ref.	description	OE-number	measures
1	863305	mounting axle body	1K0 505 145 J	di:18 do:70	14	863723	silentblock for TCA	Part of	di:14.2 do:40.1 (*)
2	863306	mounting axle body	1K0 505 145 K	di:18 do:70	15	863722	silentblock for TCA	Part of	di:12.1 do:40.4 (*)
3	863311	mounting axle body	5Q0 505 145 F	di:18.2 do:61.5	16	63178	TCA	1K0 505 311 AB	
4	863312	mounting axle body	5Q0 505 145 E	di:18.6 do:53.5	17	863726	silentblock for TCA	Part of	di:12.1 do:42 (*)
5	37278	TCA left	1K0 505 223 K	L:373	18	863714	silentblock for TCA	1K0 505 553 A	di:12.2 do:37.4 (*)
6	37279	TCA right	1K0 505 224 K	L:373	19	63660	stabiliser link rear axle	1K0 505 465 K	L:95
7	863719	mounting axle body	3C0 505 541	di:12.2 do:60.2 (*)	20	863901	stabiliser mounting	1K0 511 327 AP	di:17
8	63775	track rod	1K0 505 323 N	L:305.5	21	863902	stabiliser mounting	1K0 511 327 AQ	di:19
9	63568	track rod	1K0 501 529 F	L:298	22	863903	stabiliser mounting	1K0 511 327 AR	di:18.5
10	63569	track rod	1K0 501 530 C	L:298	23	863904	stabiliser mounting	1K0 511 327 AS	di:19.5
11	63376	track rod	1K0 501 529 H	L:298	24	863505	strut mount	1K0 513 353 H	di:10.4 L:62
12	863733	silentblock for TCA	Part of	di:14.3 do:38.2 (*)	25	863507	strut mount	3C0 513 353 C	di:10.5 do:68 L:62.7
13	863732	silentblock for TCA	Part of	di:12.1 do:38.3 (*)					

Copyright 2021

SKODA
OCTAVIA

OCTAVIA IV (5E3, NL3, NR3) 11/2012 ->
OCTAVIA IV COMBI (5E5, 5E6) 11/2012 ->

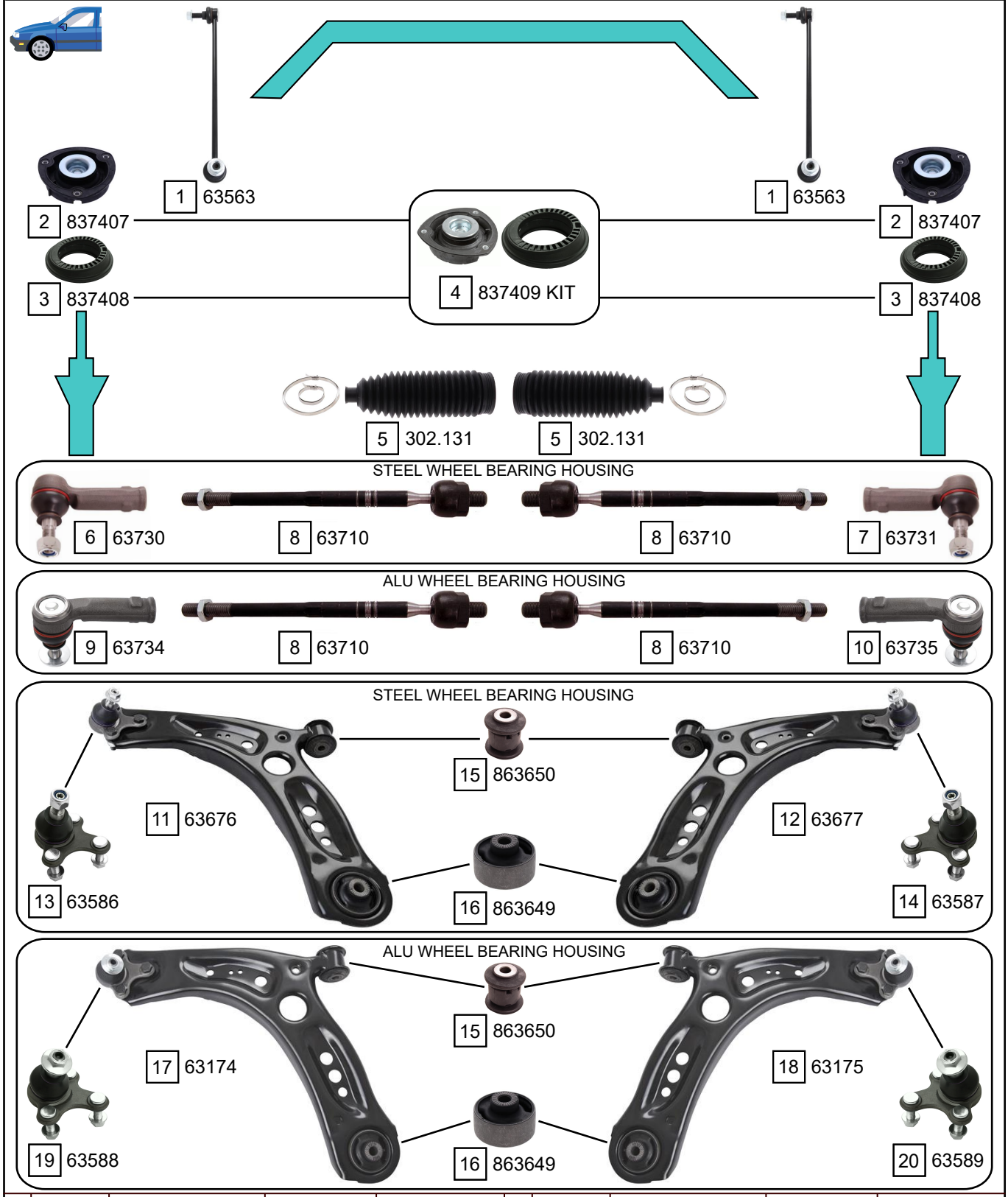

Ref.	Sidem Ref.	Description	OE-number	Measures	Ref.	Sidem Ref.	Description	OE-number	Measures
1	63563	stabiliser link	5Q0 411 315 A	L:335	11	63676	TCA left wbj	5Q0 407 151 L S1	c:15.4
2	837407	strut mount	5Q0 412 331 E	di:14.6 do:64.1 L:42	12	63677	TCA right wbj	5Q0 407 152 L S1	c:15.4
3	837408	bearing	5Q0 412 249 F	di:74 do:127 L:38.6	13	63586	ball joint left	1K0 407 365 C	c:15.4
4	837409 KIT	strut mount kit	5Q0 412 331 E S1	di:14.6 do:127	14	63587	ball joint right	1K0 407 366 C	c:15.4
5	302.131	steering rack gaiter	1K0 423 831 A	D:50 d:15 L:193	15	863650	silentblock for TCA	5Q0 407 182 A	di:12.1 do:40.1 (*)
6	63730	tie rod end left	1K0 423 811 J S1	c:13.2 th:FM16x1.5R	16	863649	silentblock for TCA	5Q0 407 183 E	di:12.9 do:65 (*)
7	63731	tie rod end right	1K0 423 812 J S1	c:13.2 th:FM16x1.5R	17	63174	TCA left wbj	5Q0 407 151 L S2	c:15.2
8	63710	axial joint	1K0 423 810 A	th:MM16X1.5R L:312	18	63175	TCA right wbj	5Q0 407 152 L S2	c:15.2
9	63734	tie rod end left	1K0 423 811 J S2	c:13.2 th:FM16X1.5R	19	63588	ball joint left	3C0 407 365 B	c:15.2
10	63735	tie rod end right	1K0 423 812 J S2	c:13.2 th:FM16X1.5R	20	63589	ball joint right	3C0 407 366 B	c:15.2

Copyright 2021

OCTAVIA IV (5E3, NL3, NR3) 11/2012 ->
OCTAVIA IV COMBI (5E5, 5E6) 11/2012 ->

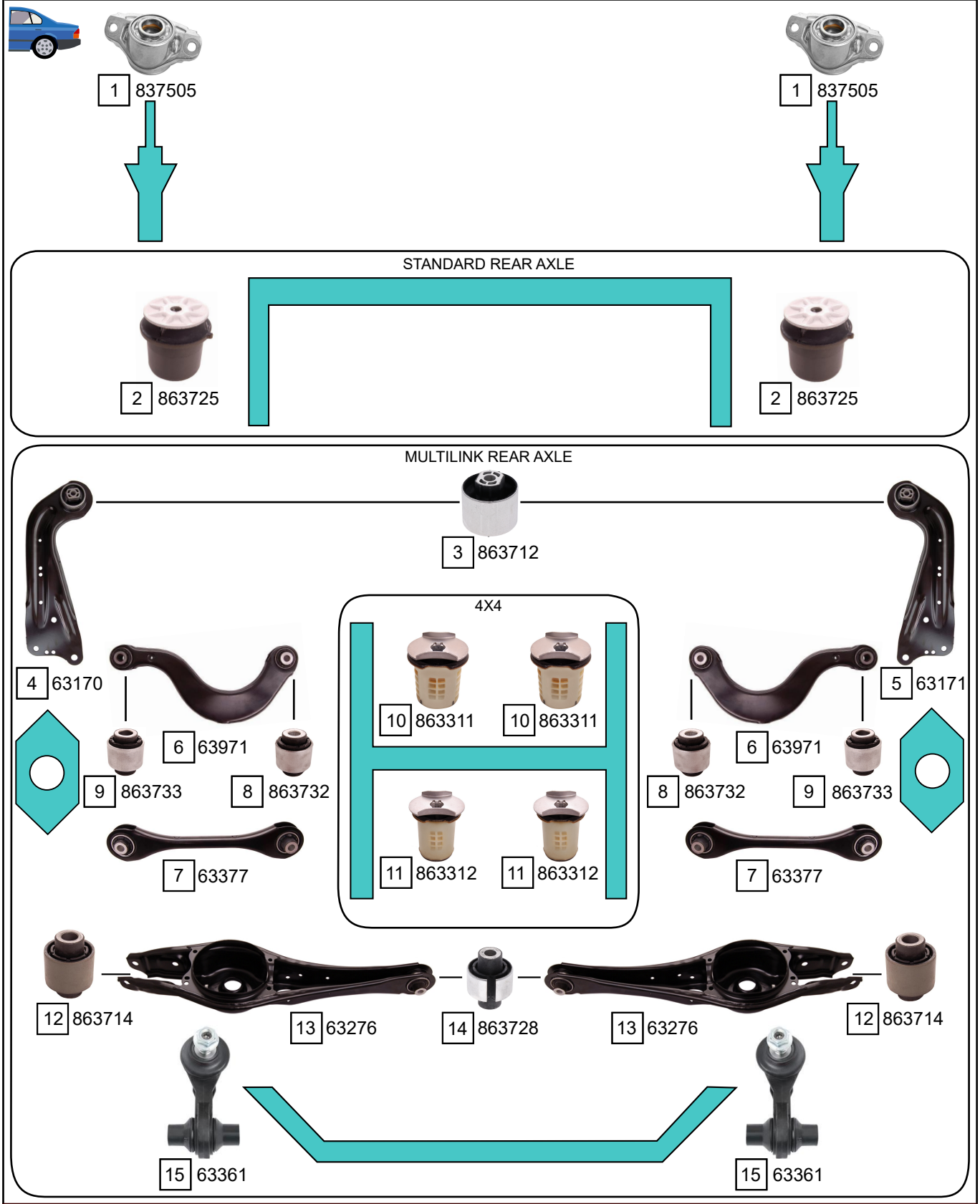

Ref.	Sidem Ref.	Description	OE-number	Measures	Ref.	Sidem Ref.	Description	OE-number	Measures
1	837505	strut mount	5Q0 513 353 G	di:10.2 do:65.8 L:63.3	9	863733	silentblock for TCA	Part of	di:14.3 do:38.2 (*)
2	863725	mounting axle body	5Q0 501 541 C	di:12.5 do:72	10	863311	mounting axle body	5Q0 505 145 F	di:18.2 do:61.5
3	863712	silentblock for TCA	1K0 505 541 B	di:12.2 do:60.2 (*)	11	863312	mounting axle body	5Q0 505 145 E	di:18.6 do:53.5
4	63170	TCA left	5Q0 505 223 D	L:384	12	863714	silentblock for TCA	1K0 505 553 A	di:12.2 do:37.4 (*)
5	63171	TCA right	5Q0 505 224 D	L:384	13	63276	TCA	5Q0 505 311 D	
6	63971	track rod	5Q0 505 323 C	L:305	14	863728	silentblock for TCA	Part of	di:12 do:44.3 (*)
7	63377	track rod	5Q0 501 529 F	L:282	15	63361	stabiliser link rear axle	5Q0 505 465 C	L:70
8	863732	silentblock for TCA	Part of	di:12.1 do:38.3 (*)					

Copyright 2021

SKODA
OCTAVIA

SIDEM
Experts know why

OCTAVIA V (NX3)
OCTAVIA V COMBI (NX5)

01/2020 ->
11/2019 ->

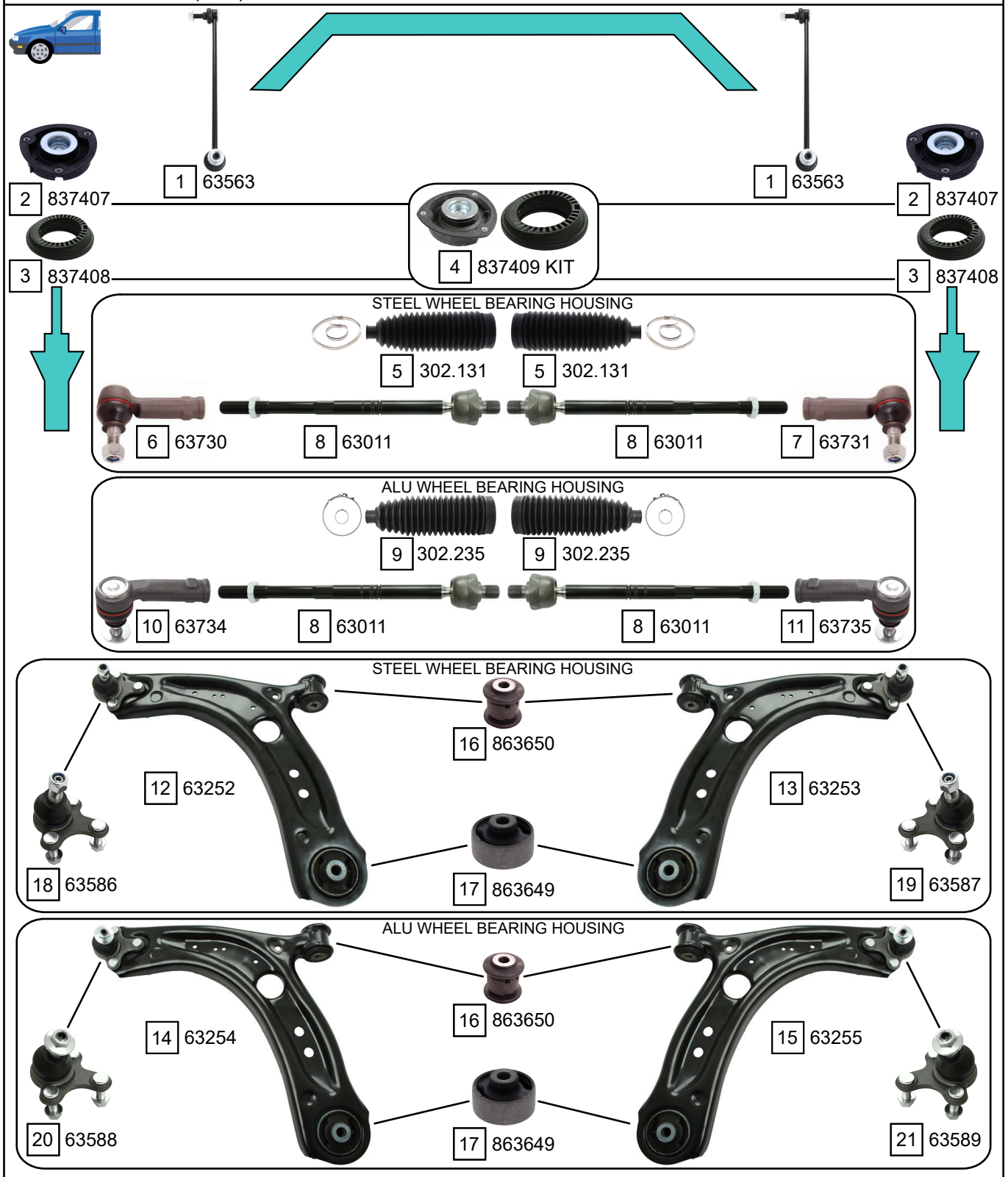

Ref.	Sidem Ref.	Description	OE-number	Measures	Ref.	Sidem Ref.	Description	OE-number	Measures
1	63563	stabiliser link	5Q0 411 315 A	L:335	12	63252	TCA left wbj	5WA 407 151 A S1	c:15.4
2	837407	strut mount	5Q0 412 331 E	di:14.6 do:64.1 L:42	13	63253	TCA right wbj	5WA 407 152 A S1	c:15.4
3	837408	bearing	5Q0 412 249 F	di:74 do:127 L:38.6	14	63254	TCA left wbj	5WA 407 151 A S2	c:15.2
4	837409 KIT	strut mount kit	5Q0 412 331 E S1	di:14.6 do:127	15	63255	TCA right wbj	5WA 407 152 A S2	c:15.2
5	302.131	steering rack gaiter	1K0 423 831 A	D:50 d:15 L:193	16	863650	silentblock for TCA	5Q0 407 182 A	di:12.1 do:40.1 (*)
6	63730	tie rod end left	1K0 423 811 J S1	c:13.2 th:FM16x1.5R	17	863649	silentblock for TCA	5Q0 407 183 E	di:12.9 do:65 (*)
7	63731	tie rod end right	1K0 423 812 J S1	c:13.2 th:FM16x1.5R	18	63586	ball joint left	1K0 407 365 C	c:15.4
9	302.235	steering rack gaiter	5Q0 423 831	D:53.5 d:15.5 L:191	19	63587	ball joint right	1K0 407 366 C	c:15.4
10	63734	tie rod end left	1K0 423 811 J S2	c:13.2 th:FM16X1.5R	20	63588	ball joint left	3C0 407 365 B	c:15.2
11	63735	tie rod end right	1K0 423 812 J S2	c:13.2 th:FM16X1.5R	21	63589	ball joint right	3C0 407 366 B	c:15.2

Copyright 2021

OCTAVIA V (NX3)
OCTAVIA V COMBI (NX5)

01/2020 ->
11/2019 ->

1 837511

2 837505

1 837511

2 837505

STANDARD REAR AXLE

3 863725 FULL RUBBER SB

4 863735 HYDRO SB

4 863735 HYDRO SB

3 863725 FULL RUBBER SB

MULTILINK REAR AXLE

5 863712

6 63170

7 63171

4WD

12 863311

12 863311

13 863312

13 863312

8 63971

10 863733

9 863732

8 63971

9 863732

10 863733

11 63377

11 63377

15 863731

14 63150

16 863729

14 63150

15 863731

17 63260

17 63260

Ref.	Sidem Ref.	Description	OE-number	Measures	Ref.	Sidem Ref.	Description	OE-number	Measures
1	837511	strut mount	5Q0 513 353 K	di:10.2 do:65.8 L:63.3	10	863733	silentblock for TCA	Part of	di:14.3 do:38.2 (*)
2	837505	strut mount	5Q0 513 353 G	di:10.2 do:65.8 L:63.3	11	63377	track rod	5Q0 501 529 F	L:282
3	863725	mounting axle body	5Q0 501 541 C	di:12.5 do:72	12	863311	mounting axle body	5Q0 505 145 F	di:18.2 do:61.5
4	863735	mounting axle body	5Q0 501 541 E	di:12.2 do:70.1	13	863312	mounting axle body	5Q0 505 145 E	di:18.6 do:53.5
5	863712	silentblock for TCA	1K0 505 541 B	di:12.2 do:60.2 (*)	14	63150	TCA	5QA 505 311 E	
6	63170	TCA left	5Q0 505 223 D	L:384	15	863731	silentblock for TCA	5Q0 505 553	di:12.1 do:37.4 (*)
7	63171	TCA right	5Q0 505 224 D	L:384	16	863729	silentblock for TCA	Part of	di:12.1 do:44.3 (*)
8	63971	track rod	5Q0 505 323 C	L:305	17	63260	stabiliser link rear axle	5WA 505 465 A	L:70
9	863732	silentblock for TCA	Part of	di:12.1 do:38.3 (*)					

Copyright 2021

SKODA
RAPID

RAPID (NA2) 10/2011 ->

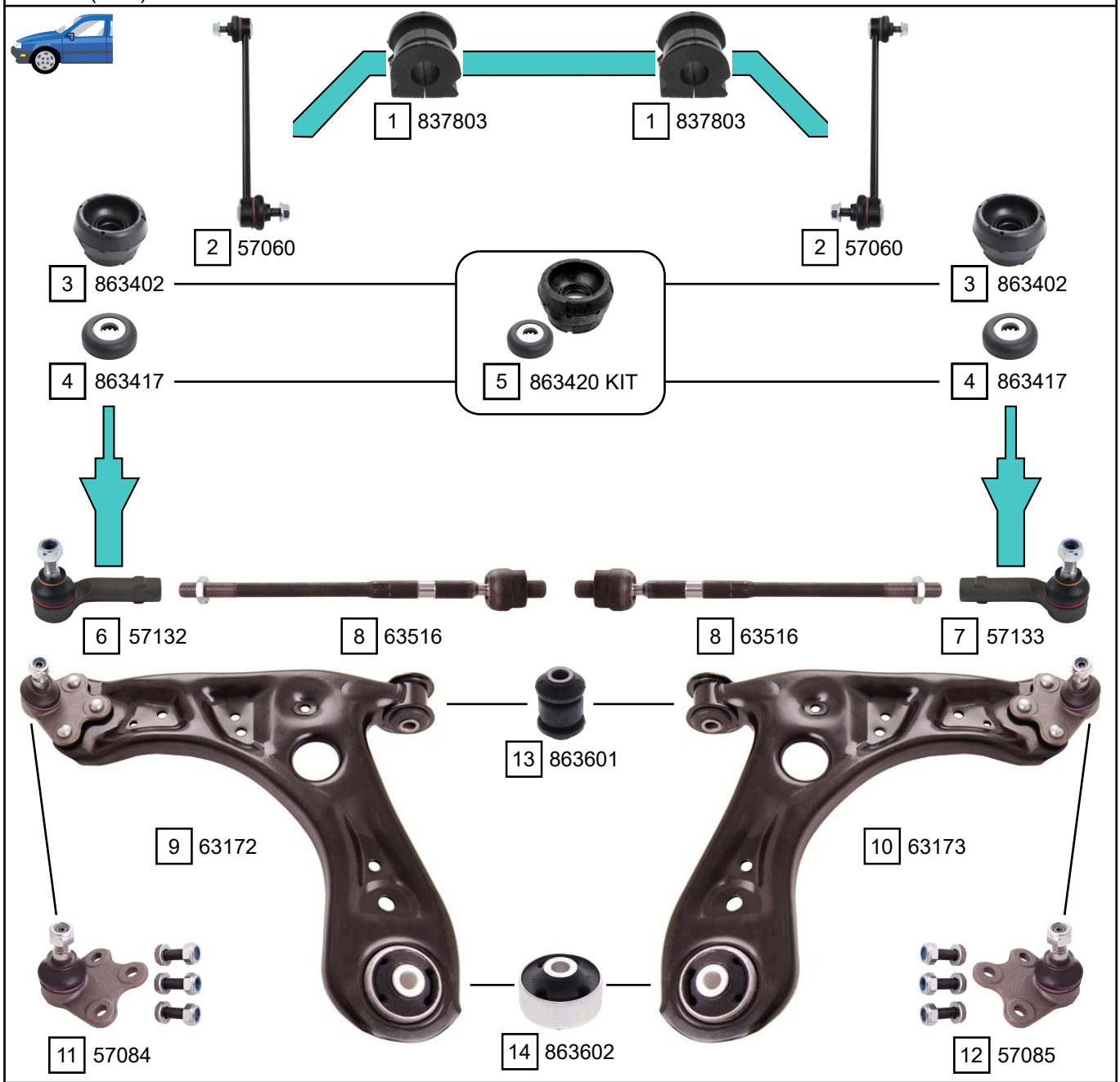

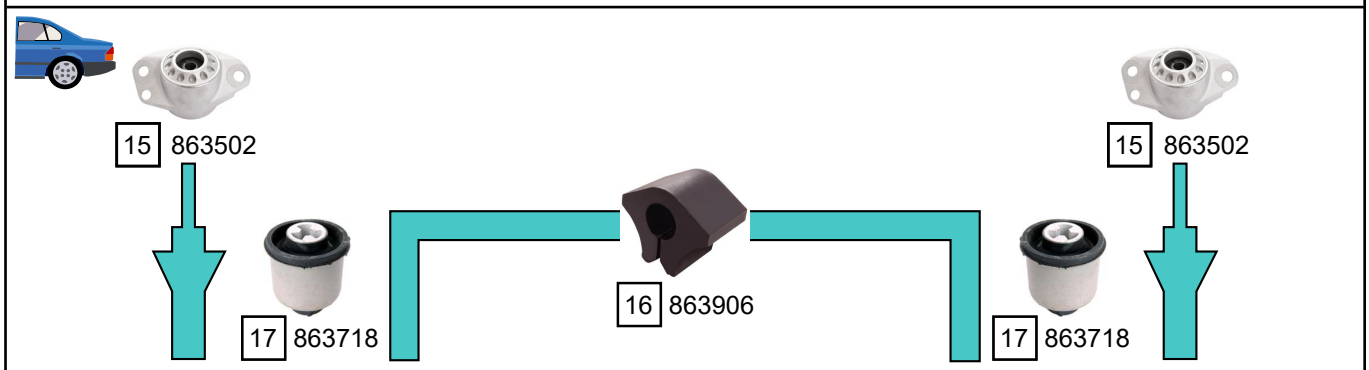

Ref.	Sidem Ref.	Description	OE-number	Measures	Ref.	Sidem Ref.	Description	OE-number	Measures
1	837803	stabiliser mounting	6Q0 411 314 P	di:16	10	63173	TCA right wbj	6RF 407 152 B	c:15
2	57060	stabiliser link	6R0 411 315	L:270	11	57084	ball joint left	6R0 407 365 A	c:14.9
3	863402	strut mount	1J0 412 331 C	di:26 do:82 L:53	12	57085	ball joint right	6R0 407 366 A	c:14.9
4	863417	bearing	1J0 412 249	di:14.3 do:45.3 L:13.4	13	863601	silentblock for TCA	357 407 182	di:12 do:32.6 (*)
5	863420 KIT	strut mount kit	1J0 412 331 C S1	di:26 do:82 L:53	14	863602	silentblock for TCA	1J0 407 181	di:13 do:60 (*)
6	57132	tie rod end left	6R0 423 811	c:13.4 th:FM14x1.5R	15	863502	strut mount	6R0 513 353	di:11.1 do:62 L:58.8
7	57133	tie rod end right	6R0 423 812	c:13.4 th:FM14x1.5R	16	863906	stabiliser mounting	871 511 423	di:16.5
8	63516	axial joint	6RU 423 810	th:MM16X1.5R L:312	17	863718	mounting axle body	6R0 501 541 A	do:71.6
9	63172	TCA left wbj	6RF 407 151 B	c:15					

Copyright 2021

RAPID (NH3) 07/2012 ->
RAPID SPACEBACK (NH1) 09/2013 ->

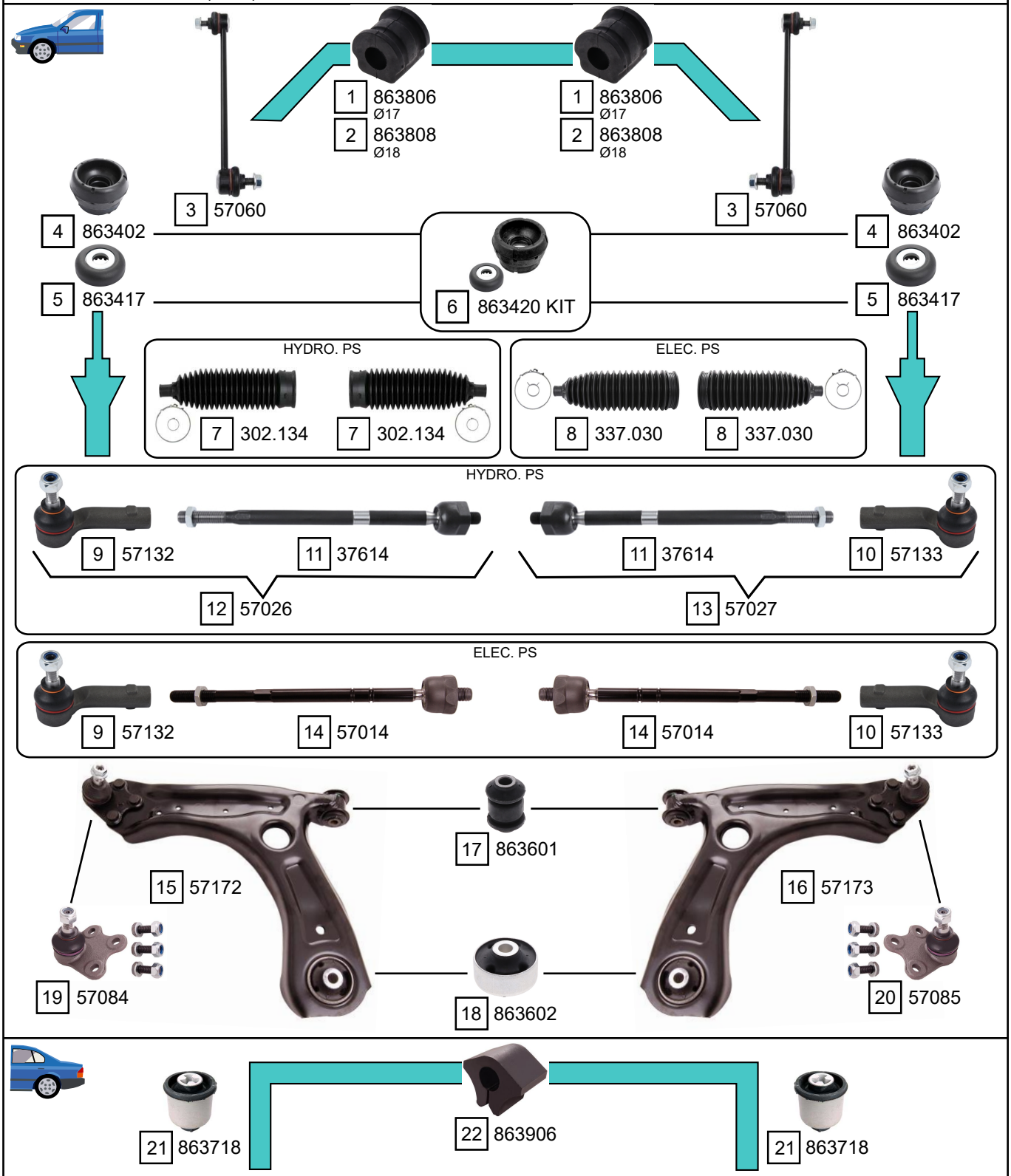

Ref.	Sidem Ref.	description	OE-number	measures	Ref.	Sidem Ref.	description	OE-number	measures
1	863806	stabiliser mounting	6Q0 411 314 Q	di:17	12	57026	tie rod left	6R0 423 803 A	c:13.4
2	863808	stabiliser mounting	6Q0 411 314 R	di:18	13	57027	tie rod right	6R0 423 804 A	c:13.4
3	57060	stabiliser link	6R0 411 315	L:270	14	57014	axial joint	6C0 423 810 C	th:MM14X1.5R L:312
4	863402	strut mount	1J0 412 331 C	di:26 do:82 L:53	15	57172	TCA left wbj	6R0 407 151 F	c:14.9
5	863417	bearing	1J0 412 249	di:14.3 do:45.3 L:13.4	16	57173	TCA right wbj	6R0 407 152 F	c:14.9
6	863420 KIT	strut mount kit	1J0 412 331 C S1	di:26 do:82 L:53	17	863601	silentblock for TCA	357 407 182	di:12 do:32.6 (*)
7	302.134	steering rack gaiter	6Q0 423 831 D	D:48 d:14 L:205	18	863602	silentblock for TCA	1J0 407 181	di:13 do:60 (*)
8	337.030	steering rack gaiter	6C0 423 831 B	D:51 d:13.5 L:191	19	57084	ball joint left	6R0 407 365 A	c:14.9
9	57132	tie rod end left	6R0 423 811	c:13.4 th:FM14x1.5R	20	57085	ball joint right	6R0 407 366 A	c:14.9
10	57133	tie rod end right	6R0 423 812	c:13.4 th:FM14x1.5R	21	863718	mounting axle body	6R0 501 541 A	do:71.6
11	37614	axial joint	Part of	th:MM14x1.5R L:313	22	863906	stabiliser mounting	871 511 423	di:16.5

Copyright 2021

SKODA
ROOMSTER

SIDEM
Experts know why

ROOMSTER (5J) 09/2006 - 04/2015
ROOMSTER PRAKTIK (5J) 03/2007 - 04/2015

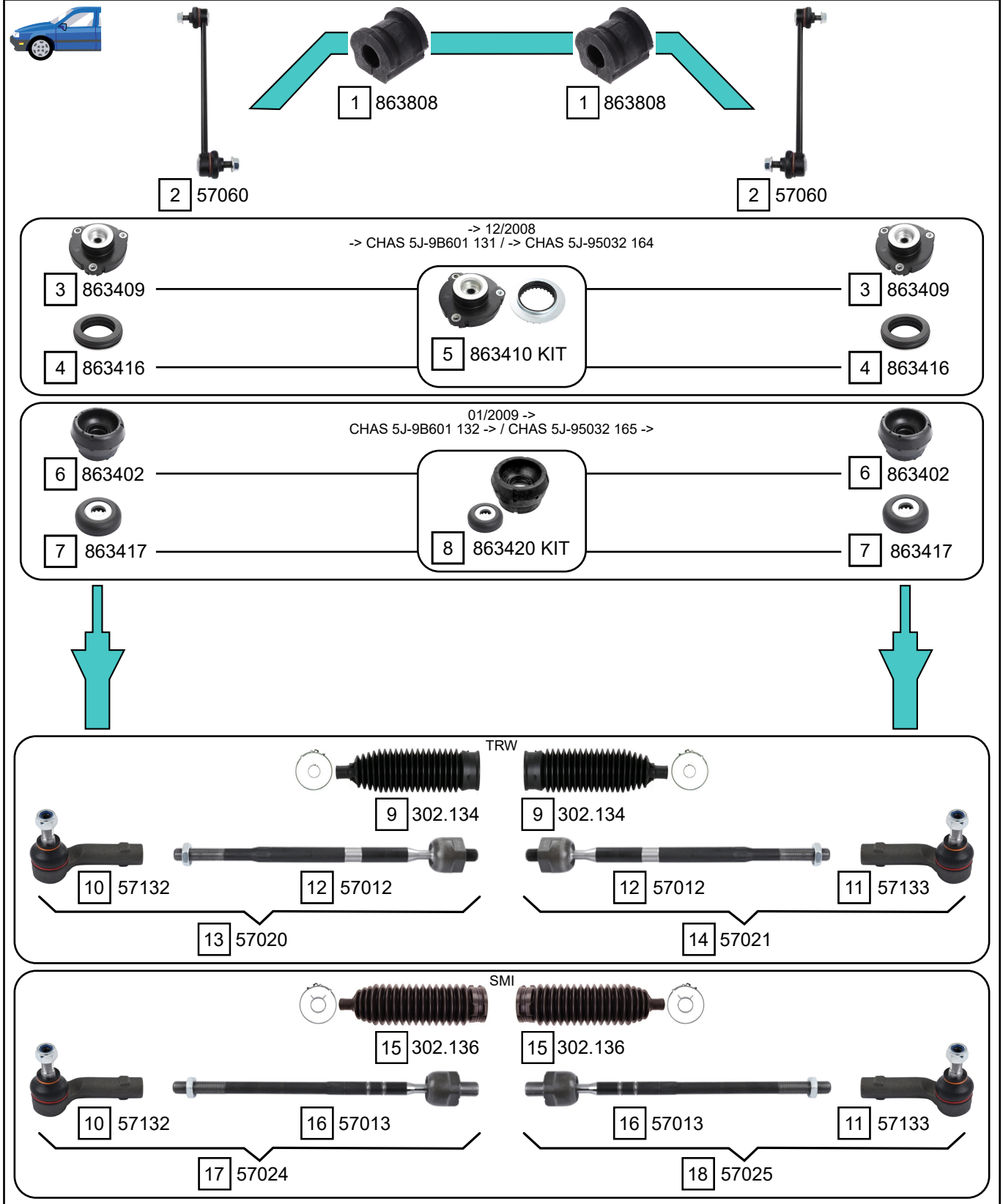

Ref.	Sidem Ref.	Description	OE-number	Measures	Ref.	Sidem Ref.	Description	OE-number	Measures
1	863808	stabiliser mounting	6Q0 411 314 R	di:18	10	57132	tie rod end left	6R0 423 811	c:13.4 th:FM14x1.5R
2	57060	stabiliser link	6R0 411 315	L:270	11	57133	tie rod end right	6R0 423 812	c:13.4 th:FM14x1.5R
3	863409	strut mount	6N0 412 331 E	di:14.3 do:66 L:49	12	57012	axial joint	Part of	th:MM14X1.5R L:297
4	863416	bearing	1K0 412 249 B	di:68.5 do:112 L:25.5	13	57020	tie rod left	6Q0 423 803 P	c:13.4
5	863410 KIT	strut mount kit	6N0 412 331 E S2	di:14.3	14	57021	tie rod right	6Q0 423 804 P	c:13.4
6	863402	strut mount	1J0 412 331 C	di:26 do:82 L:53	15	302.136	steering rack gaiter	6Q0 423 831 A	D:46 d:13 L:210
7	863417	bearing	1J0 412 249	di:14.3 do:45.3 L:13.4	16	57013	axial joint	6Q0 423 810 C	th:MM16x1.5R L:300
8	863420 KIT	strut mount kit	1J0 412 331 C S1	di:26 do:82 L:53	17	57024	tie rod left	6Q0 423 803 G	c:13.4
9	302.134	steering rack gaiter	6Q0 423 831 D	D:48 d:14 L:205	18	57025	tie rod right	6Q0 423 804 G	c:13.4

Copyright 2021

ROOMSTER (5J) 09/2006 - 04/2015
ROOMSTER PRAKTIK (5J) 03/2007 - 04/2015

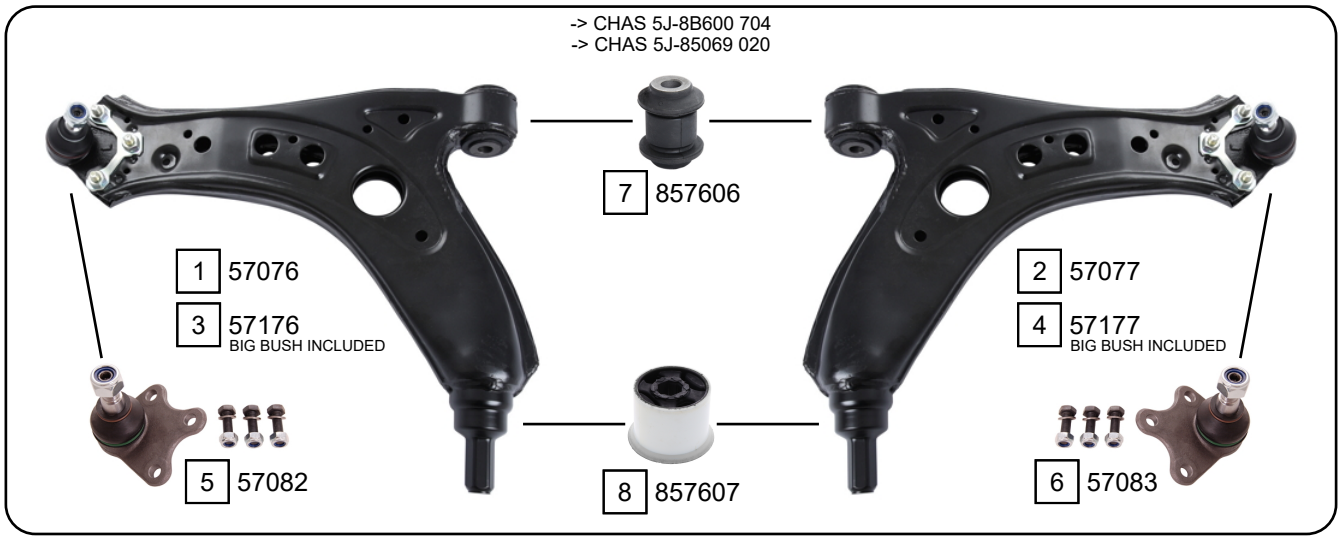

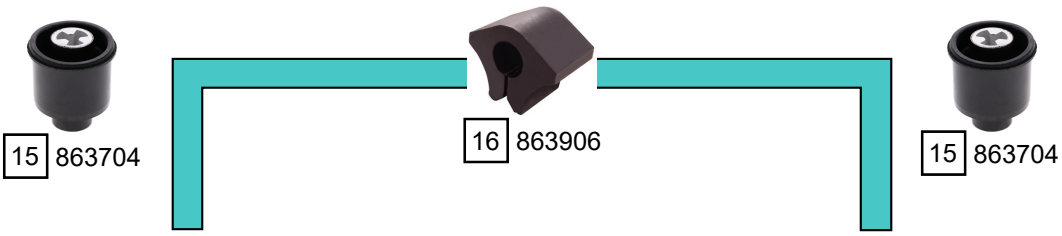

Ref.	Sidem Ref.	Description	OE-number	Measures	Ref.	Sidem Ref.	Description	OE-number	Measures
1	57076	TCA left wbj	6Q0 407 151 L S1	c:14.8	9	57170	TCA left wbj	6R0 407 151	c:15
2	57077	TCA right wbj	6Q0 407 151 L S2	c:14.8	10	57171	TCA right wbj	6R0 407 152	c:15
3	57176	TCA left wbj	6Q0 407 151 L S3	c:14.8	11	57084	ball joint left	6R0 407 365 A	c:14.9
4	57177	TCA right wbj	6Q0 407 151 L S4	c:14.8	12	57085	ball joint right	6R0 407 366 A	c:14.9
5	57082	ball joint	6Q0 407 365 A	c:14.8	13	863601	silentblock for TCA	357 407 182	di:12 do:32.6 (*)
6	57083	ball joint	6Q0 407 366 A	c:14.8	14	863602	silentblock for TCA	1J0 407 181	di:13 do:60 (*)
7	857606	silentblock for TCA	6Q0 407 182 A	di:12.1 do:32 (*)	15	863704	mounting axle body	1J0 501 541 C	di:12 do:71.5
8	857607	silentblock for TCA	1K0 407 183 E	di:18.5 do:64 (*)	16	863906	stabiliser mounting	871 511 423	di:16.5

Copyright 2021

SKODA
SCALA

SIDEM
Experts know why

SCALA (NW1) 02/2019 ->

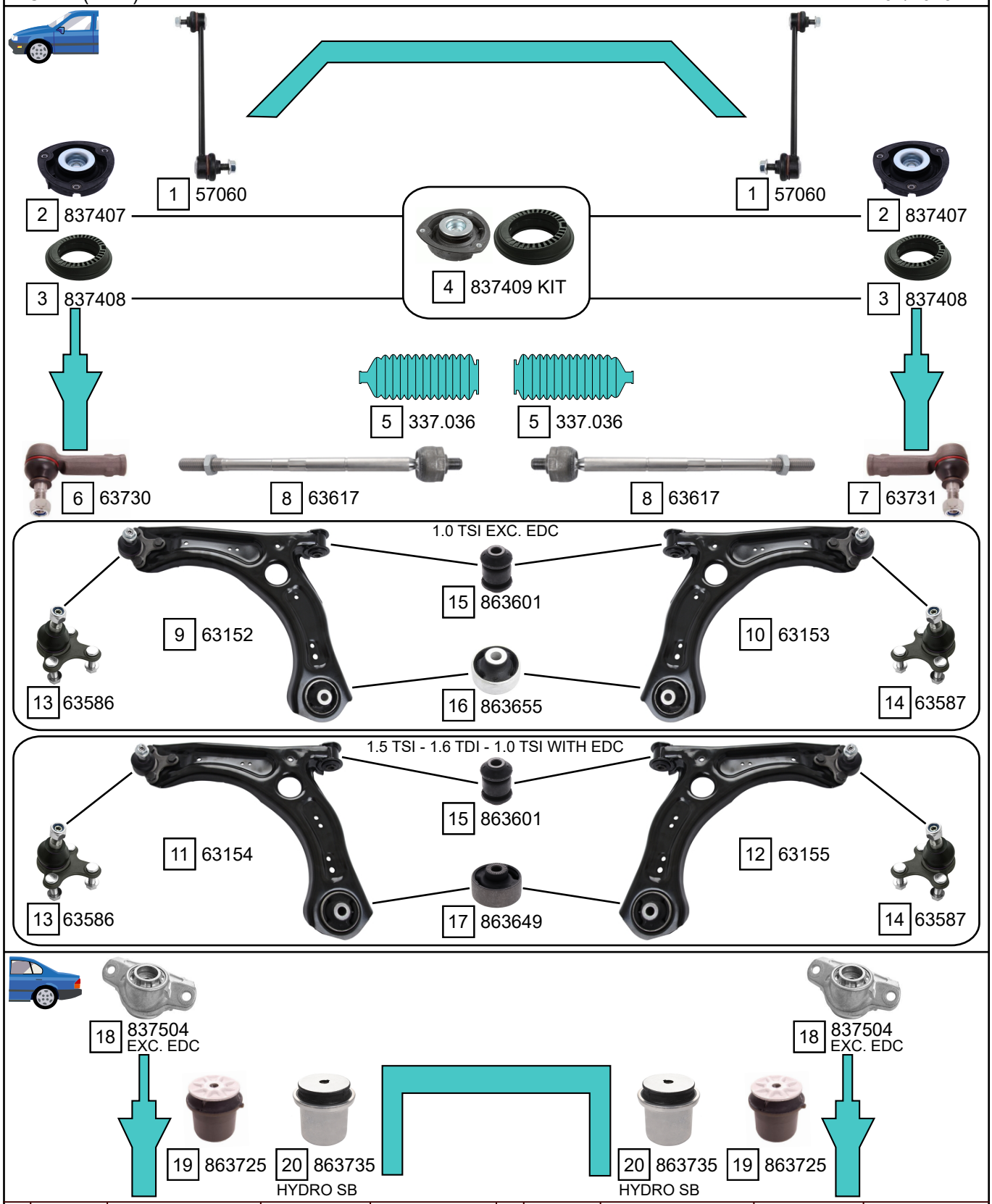

Ref.	Sidem Ref.	Description	OE-number	Measures	Ref.	Sidem Ref.	Description	OE-number	Measures
1	57060	stabiliser link	6R0 411 315	L:270	11	63154	TCA left wbj	2Q0 407 151 E S1	c:15.4
2	837407	strut mount	5Q0 412 331 E	di:14.6 do:64.1 L:42	12	63155	TCA right wbj	2Q0 407 152 E S1	c:15.4
3	837408	bearing	5Q0 412 249 F	di:74 do:127 L:38.6	13	63586	ball joint left	1K0 407 365 C	c:15.4
4	837409 KIT	strut mount kit	5Q0 412 331 E S1	di:14.6 do:127	14	63587	ball joint right	1K0 407 366 C	c:15.4
5	337.036	steering rack gaiter	2Q0 423 831	D:54.5 d:14.5 L:192	15	863601	silentblock for TCA	357 407 182	di:12 do:32.6 (*)
6	63730	tie rod end left	1K0 423 811 J S1	c:13.2 th:FM16x1.5R	16	863655	silentblock for TCA	2Q0 407 183 B	di:12.9 do:60.5 (*)
7	63731	tie rod end right	1K0 423 812 J S1	c:13.2 th:FM16x1.5R	17	863649	silentblock for TCA	5Q0 407 183 E	di:12.9 do:65 (*)
8	63617	axial joint	2Q0 423 810 D	th:MM14X1.5R L:315	18	837504	strut mount	5Q0 513 353 H	di:11.2 do:56.5 L:60.7
9	63152	TCA left wbj	2Q0 407 151 D S1	c:15.4	19	863725	mounting axle body	5Q0 501 541 C	di:12.5 do:72
10	63153	TCA right wbj	2Q0 407 152 D S1	c:15.4	20	863735	mounting axle body	5Q0 501 541 E	di:12.2 do:70.1

Copyright 2021

SUPERB I (3U4) 02/2002 - 06/2008

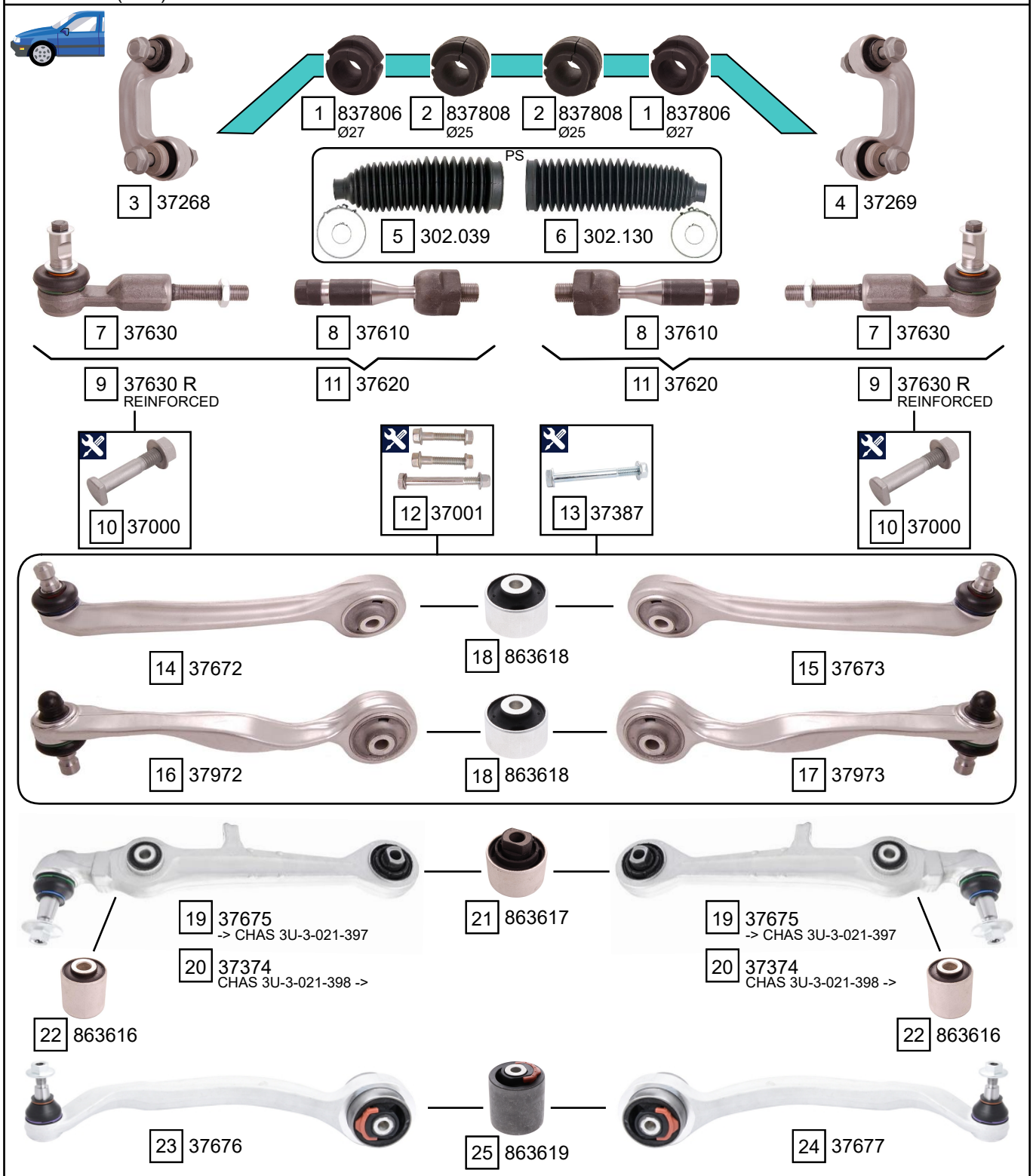

Ref.	Sidem Ref.	description	OE-number	measures	Ref.	Sidem Ref.	description	OE-number	measures
1	837806	stabiliser mounting	4D0 411 327 H	di:27	14	37672	TCA left wbj	8E0 407 505 P	c:16
2	837808	stabiliser mounting	4D0 411 327 G	di:24.5	15	37673	TCA right wbj	8E0 407 506 P	c:16
3	37268	stabiliser link left	8D0 411 317 D	L:90	16	37972	TCA left wbj	8E0 407 509 A	c:16
4	37269	stabiliser link right	8D0 411 318 D	L:90	17	37973	TCA right wbj	8E0 407 510 A	c:16
5	302.039	steering rack gaiter	4D0 419 831 E	D:54 d:18 L:205	18	863618	silentblock for TCA	8D0 407 515 C	di:10 do:46.5 (*)
6	302.130	steering rack gaiter	8D0 419 831 K	D:65 d:18 L:255	19	37675	TCA wbj	4D0 407 151 P	c:20.5
7	37630	tie rod end	4F0 419 811 E	c:17.5 th:MM14X1.5R	20	37374	TCA wbj	4B3 407 151 E	c:16.2
8	37610	axial joint	8E0 422 821	th:MM16X1.5R L:128	21	863617	silentblock for TCA	4D0 407 182 G	di:12.2 do:50.4 (*)
9	37630 R	tie rod end	4F0 419 811 E R	c:17.5 th:MM14X1.5R	22	863616	silentblock for TCA	4D0 407 181 H	di:12.2 do:40.2 (*)
10	37000	mounting kit	4D0 407 192 C S1	th:M10x1.5R	23	37676	TCA left wbj	8E0 407 693 AG	c:15.5
11	37620	tie rod	4B0 419 801 M	c:17.5 L:250	24	37677	TCA right wbj	8E0 407 694 AG	c:15.5
12	37001	mounting kit	N 105 768 02 S1	th:M10x1.5R	25	863619	silentblock for TCA	4D0 407 183 AC	di:12.2 do:65 (*)
13	37387	mounting kit	N 102 861 02 S1	th:MM10x1.5R L:72					

Copyright 2021

SKODA
SUPERB

SUPERB I (3U4) 02/2002 - 06/2008

-> CHAS 3U-3-021-397
KIT INCL MOUNTING TOOLS

1 37978

-> CHAS 3U-3-021-397
KIT INCL MOUNTING TOOLS
+ STAB. LINKS

2 37979

-> CHAS 3U-3-021-397
KIT INCL MOUNTING TOOLS
+ STAB. LINKS + TRE

3 37872

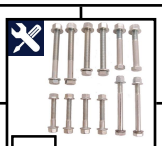

7 37386

CHAS 3U-3-021-398 ->
KIT INCL MOUNTING TOOLS

4 37376

CHAS 3U-3-021-398 ->
KIT INCL MOUNTING TOOLS
+ STAB. LINKS

5 37874

CHAS 3U-3-021-398 ->
KIT INCL MOUNTING TOOLS
+ STAB. LINKS + TRE

6 37873

8 857500

8 857500

9 863710

10 863711

Ref.	Sidem Ref.	Description	OE-number	Measures	Ref.	Sidem Ref.	Description	OE-number	Measures
1	37978	set TCA	8E0 407 509 P S1		6	37873	set TCA + stab. link + tre	4B3 407 151 E S3	
2	37979	set TCA + stab. link	8E0 407 509 P S2		7	37386	mounting kit	Part of	
3	37872	set TCA + stab. link + tre	8E0 407 509 P S3		8	857500	strut mount	3B0 513 353	di:10 do:73.3 L:77.5
4	37376	set TCA	4B3 407 151 E S1		9	863710	mounting axle body	4B0 501 521 D	di:15.3
5	37874	set TCA + stab. link	4B3 407 151 E S2		10	863711	mounting axle body	4B0 501 522 D	di:15.3

Copyright 2021

SUPERB II (3T4) 07/2008 - 05/2015
SUPERB II COMBI (3T5) 10/2009 - 05/2015

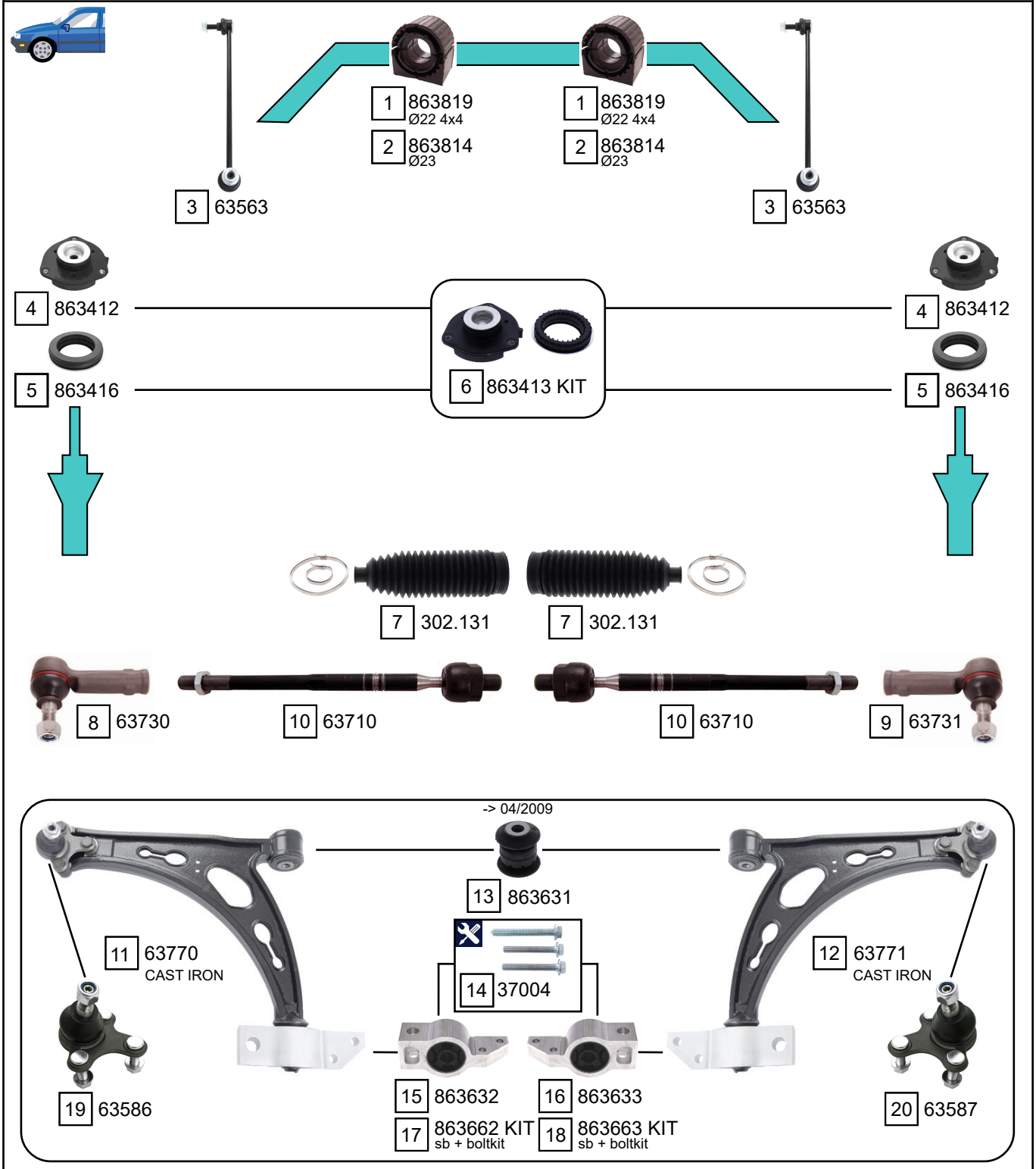

Ref.	Sidem Ref.	Description	OE-number	Measures	Ref.	Sidem Ref.	Description	OE-number	Measures
1	863819	stabiliser mounting	Part of	di:20	11	63770	TCA left wbj	1K0 407 151 T	c:15.4
2	863814	stabiliser mounting	Part of	di:21	12	63771	TCA right wbj	1K0 407 152 T	c:15.4
3	63563	stabiliser link	5Q0 411 315 A	L:335	13	863631	silentblock for TCA	1K0 407 182	di:12.1 do:40 (*)
4	863412	strut mount	1K0 412 331 B	di:14.2 L:49.5	14	37004	mounting kit	N 910 398 02 S1	th:M10x1.5R
5	863416	bearing	1K0 412 249 B	di:68.5 do:112 L:25.5	15	863632	silentblock for TCA	1K0 199 231 J	di:18.8 (*)
6	863413 KIT	strut mount kit	1K0 412 331 B S1	di:14.2 L:50	16	863633	silentblock for TCA	1K0 199 232 J	di:18.8 (*)
7	302.131	steering rack gaiter	1K0 423 831 A	D:50 d:15 L:193	17	863662 KIT	silentblock kit	1K0 199 231 J S1	
8	63730	tie rod end left	1K0 423 811 J S1	c:13.2 th:FM16x1.5R	18	863663 KIT	silentblock kit	1K0 199 232 J S1	
9	63731	tie rod end right	1K0 423 812 J S1	c:13.2 th:FM16x1.5R	19	63586	ball joint left	1K0 407 365 C	c:15.4
10	63710	axial joint	1K0 423 810 A	th:MM16X1.5R L:312	20	63587	ball joint right	1K0 407 366 C	c:15.4

Copyright 2021

SKODA
SUPERB

SIDEM
Experts know why

SUPERB II (3T4) 07/2008 - 05/2015
SUPERB II COMBI (3T5) 10/2009 - 05/2015

05/2009 - 07/2010

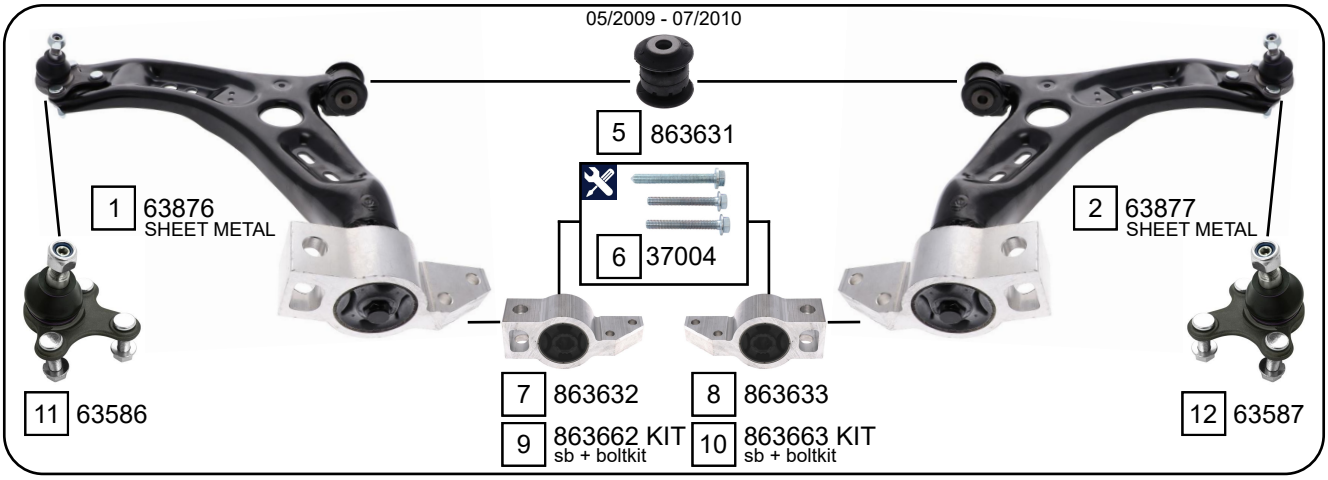

08/2010 ->

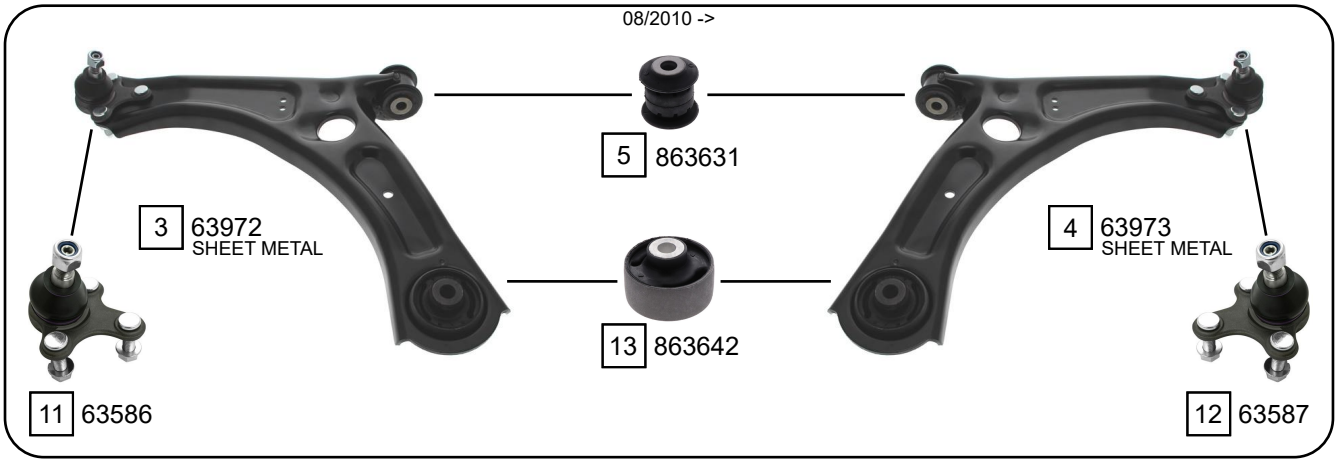

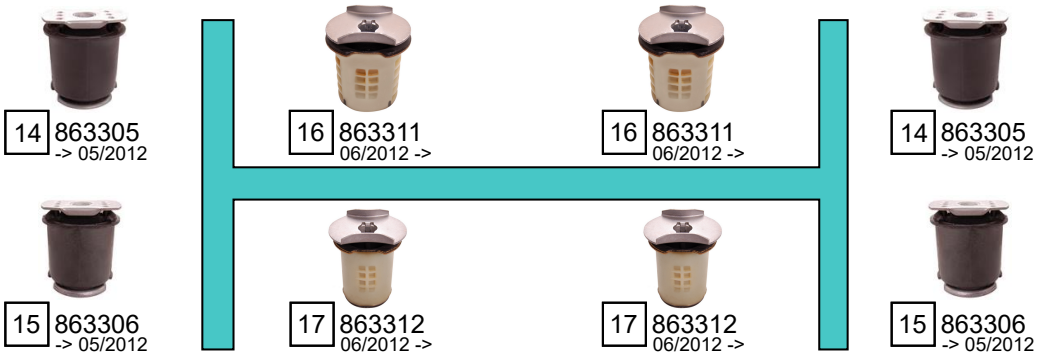

Ref.	Sidem Ref.	Description	OE-number	Measures	Ref.	Sidem Ref.	Description	OE-number	Measures
1	63876	TCA left wbj	1K0 407 151 BC S1	c:15.4	10	863663 KIT	silentblock kit	1K0 199 232 J S1	
2	63877	TCA right wbj	1K0 407 152 BC S2	c:15.4	11	63586	ball joint left	1K0 407 365 C	c:15.4
3	63972	TCA left wbj	1K0 407 151 BG	c:15.4	12	63587	ball joint right	1K0 407 366 C	c:15.4
4	63973	TCA right wbj	1K0 407 152 BG	c:15.4	13	863642	silentblock for TCA	1K0 407 183 M	di:13.4 do:65 (*)
5	863631	silentblock for TCA	1K0 407 182	di:12.1 do:40 (*)	14	863305	mounting axle body	1K0 505 145 J	di:18 do:70
6	37004	mounting kit	N 910 398 02 S1	th:M10x1.5R	15	863306	mounting axle body	1K0 505 145 K	di:18 do:70
7	863632	silentblock for TCA	1K0 199 231 J	di:18.8 (*)	16	863311	mounting axle body	5Q0 505 145 F	di:18.2 do:61.5
8	863633	silentblock for TCA	1K0 199 232 J	di:18.8 (*)	17	863312	mounting axle body	5Q0 505 145 E	di:18.6 do:53.5
9	863662 KIT	silentblock kit	1K0 199 231 J S1						

Copyright 2021

SUPERB II (3T4) 07/2008 - 05/2015
SUPERB II COMBI (3T5) 10/2009 - 05/2015

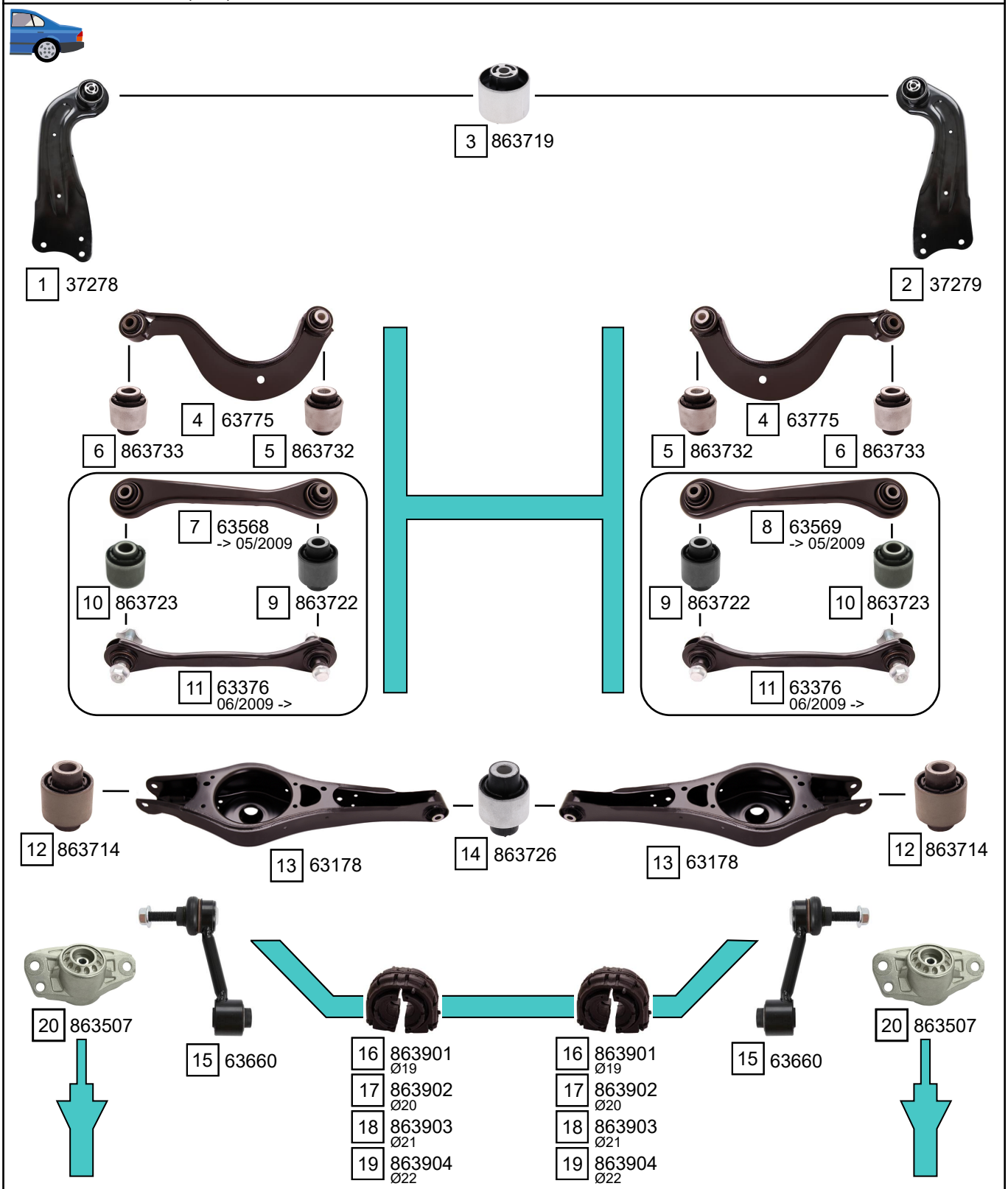

Ref.	Sidem Ref.	Description	OE-number	Measures	Ref.	Sidem Ref.	Description	OE-number	Measures
1	37278	TCA left	1K0 505 223 K	L:373	11	63376	track rod	1K0 501 529 H	L:298
2	37279	TCA right	1K0 505 224 K	L:373	12	863714	silentblock for TCA	1K0 505 553 A	di:12.2 do:37.4 (*)
3	863719	mounting axle body	3C0 505 541	di:12.2 do:60.2 (*)	13	63178	TCA	1K0 505 311 AB	
4	63775	track rod	1K0 505 323 N	L:305.5	14	863726	silentblock for TCA	Part of	di:12.1 do:42 (*)
5	863732	silentblock for TCA	Part of	di:12.1 do:38.3 (*)	15	63660	stabiliser link rear axle	1K0 505 465 K	L:95
6	863733	silentblock for TCA	Part of	di:14.3 do:38.2 (*)	16	863901	stabiliser mounting	1K0 511 327 AP	di:17
7	63568	track rod	1K0 501 529 F	L:298	17	863902	stabiliser mounting	1K0 511 327 AQ	di:19
8	63569	track rod	1K0 501 530 C	L:298	18	863903	stabiliser mounting	1K0 511 327 AR	di:18.5
9	863722	silentblock for TCA	Part of	di:12.1 do:40.4 (*)	19	863904	stabiliser mounting	1K0 511 327 AS	di:19.5
10	863723	silentblock for TCA	Part of	di:14.2 do:40.1 (*)	20	863507	strut mount	3C0 513 353 C	di:10.5 do:68 L:62.7

Copyright 2021

SKODA
SUPERB

SIDEM
Experts know why

SUPERB III (3V3)
SUPERB III COMBI (3V5)

03/2015 ->

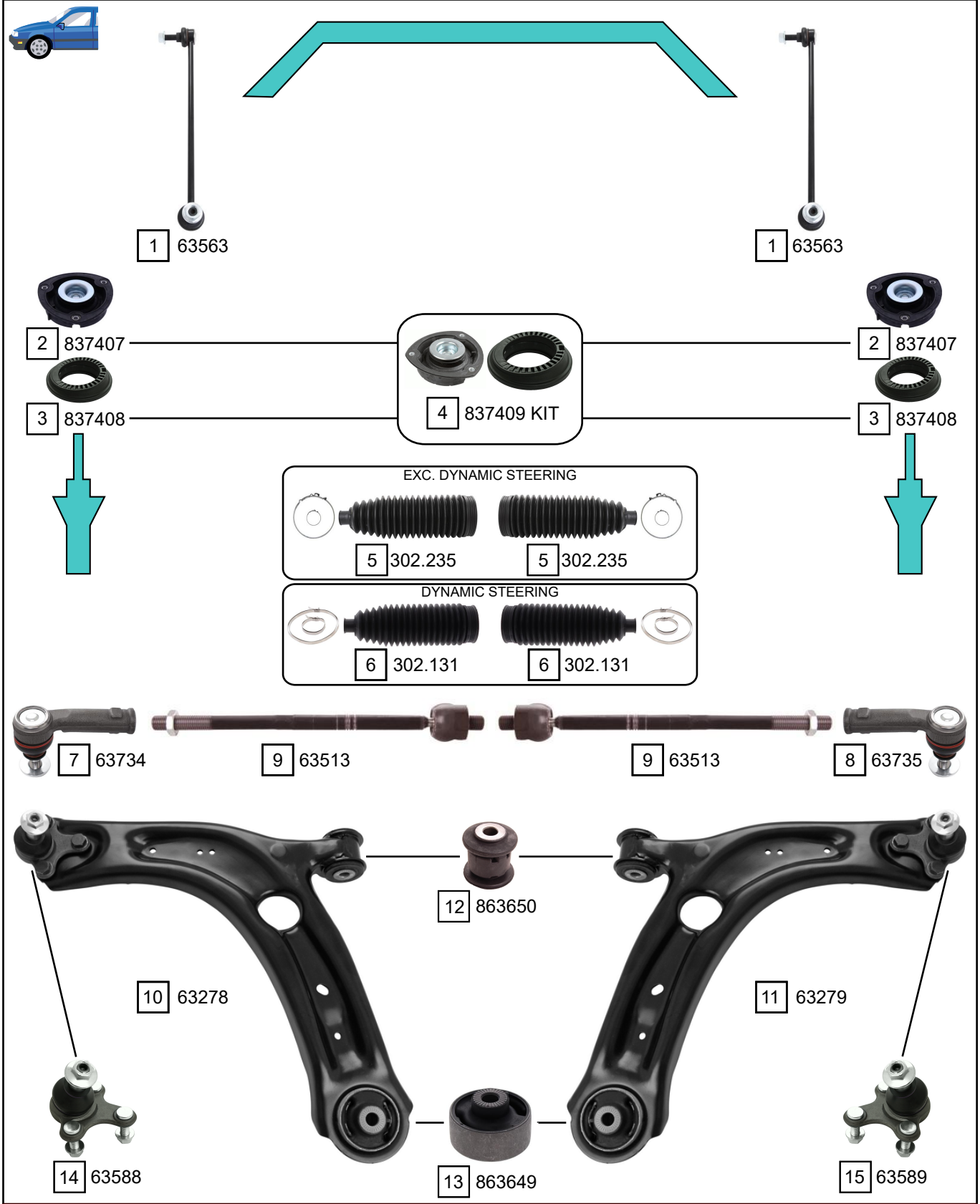

Ref.	Sidem Ref.	Description	OE-number	Measures	Ref.	Sidem Ref.	Description	OE-number	Measures
1	63563	stabiliser link	5Q0 411 315 A	L:335	9	63513	axial joint	561 423 810	th:MM16X1.5R L:330
2	837407	strut mount	5Q0 412 331 E	di:14.6 do:64.1 L:42	10	63278	TCA left wbj	3Q0 407 151 E S1	c:15.2
3	837408	bearing	5Q0 412 249 F	di:74 do:127 L:38.6	11	63279	TCA right wbj	3Q0 407 152 E S1	c:15.2
4	837409 KIT	strut mount kit	5Q0 412 331 E S1	di:14.6 do:127	12	863650	silentblock for TCA	5Q0 407 182 A	di:12.1 do:40.1 (*)
5	302.235	steering rack gaiter	5Q0 423 831	D:53.5 d:15.5 L:191	13	863649	silentblock for TCA	5Q0 407 183 E	di:12.9 do:65 (*)
6	302.131	steering rack gaiter	1K0 423 831 A	D:50 d:15 L:193	14	63588	ball joint left	3C0 407 365 B	c:15.2
7	63734	tie rod end left	1K0 423 811 J S2	c:13.2 th:FM16X1.5R	15	63589	ball joint right	3C0 407 366 B	c:15.2
8	63735	tie rod end right	1K0 423 812 J S2	c:13.2 th:FM16X1.5R					

Copyright 2021

SUPERB III (3V3)
SUPERB III COMBI (3V5)

03/2015 ->

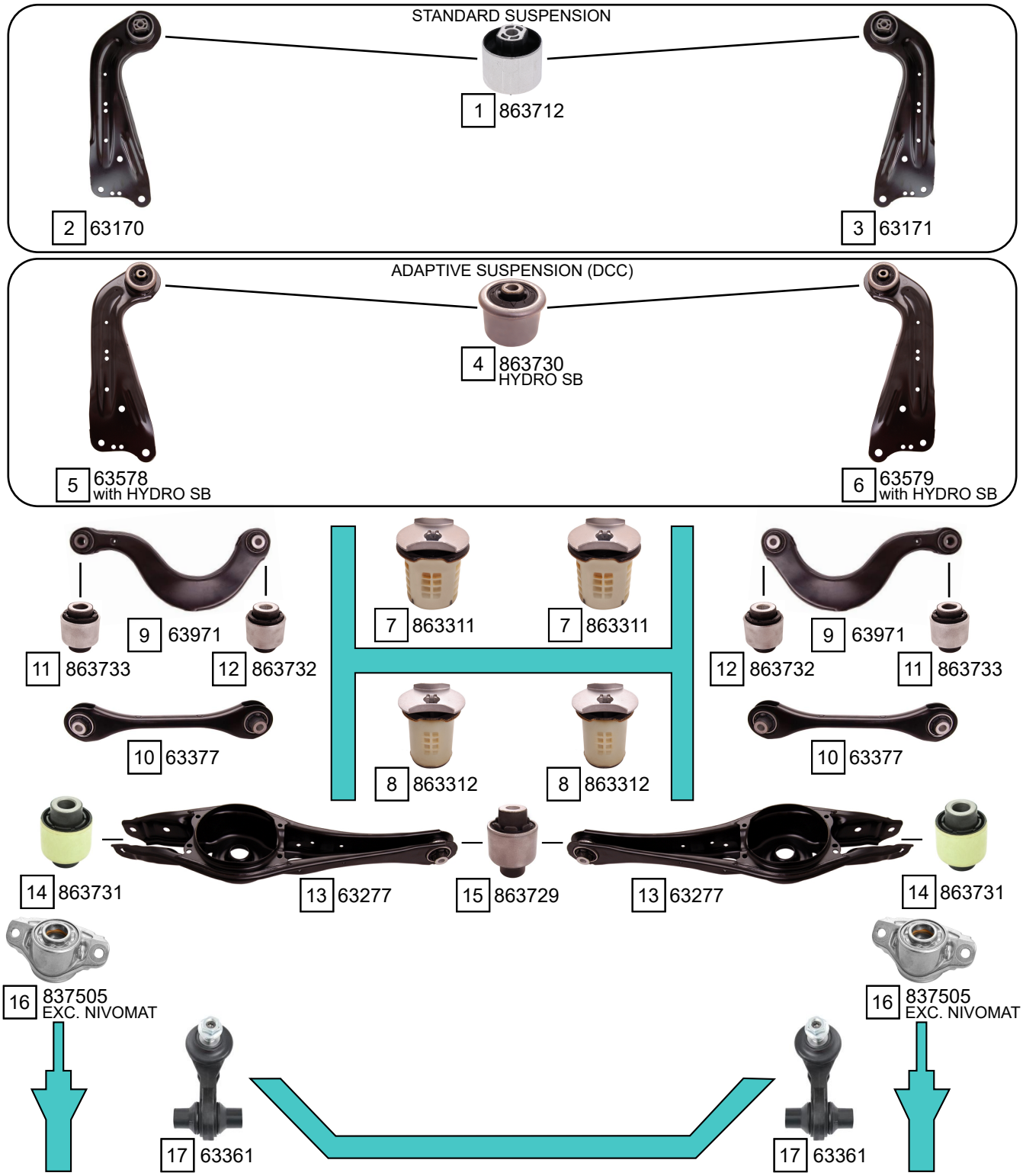

Ref.	Sidem Ref.	Description	OE-number	Measures	Ref.	Sidem Ref.	Description	OE-number	Measures
1	863712	silentblock for TCA	1K0 505 541 B	di:12.2 do:60.2 (*)	10	63377	track rod	5Q0 501 529 F	L:282
2	63170	TCA left	5Q0 505 223 D	L:384	11	863733	silentblock for TCA	Part of	di:14.3 do:38.2 (*)
3	63171	TCA right	5Q0 505 224 D	L:384	12	863732	silentblock for TCA	Part of	di:12.1 do:38.3 (*)
4	863730	silentblock for TCA	3Q0 505 541 A	di:12.1 do:65.2 (*)	13	63277	TCA	3Q0 505 311 G	
5	63578	TCA left	3Q0 505 223		14	863731	silentblock for TCA	5Q0 505 553	di:12.1 do:37.4 (*)
6	63579	TCA right	3Q0 505 224		15	863729	silentblock for TCA	Part of	di:12.1 do:44.3 (*)
7	863311	mounting axle body	5Q0 505 145 F	di:18.2 do:61.5	16	837505	strut mount	5Q0 513 353 G	di:10.2 do:65.8 L:63.3
8	863312	mounting axle body	5Q0 505 145 E	di:18.6 do:53.5	17	63361	stabiliser link rear axle	5Q0 505 465 C	L:70
9	63971	track rod	5Q0 505 323 C	L:305					

Copyright 2021

SKODA
YETI

YETI (5L) 05/2009 - 12/2017

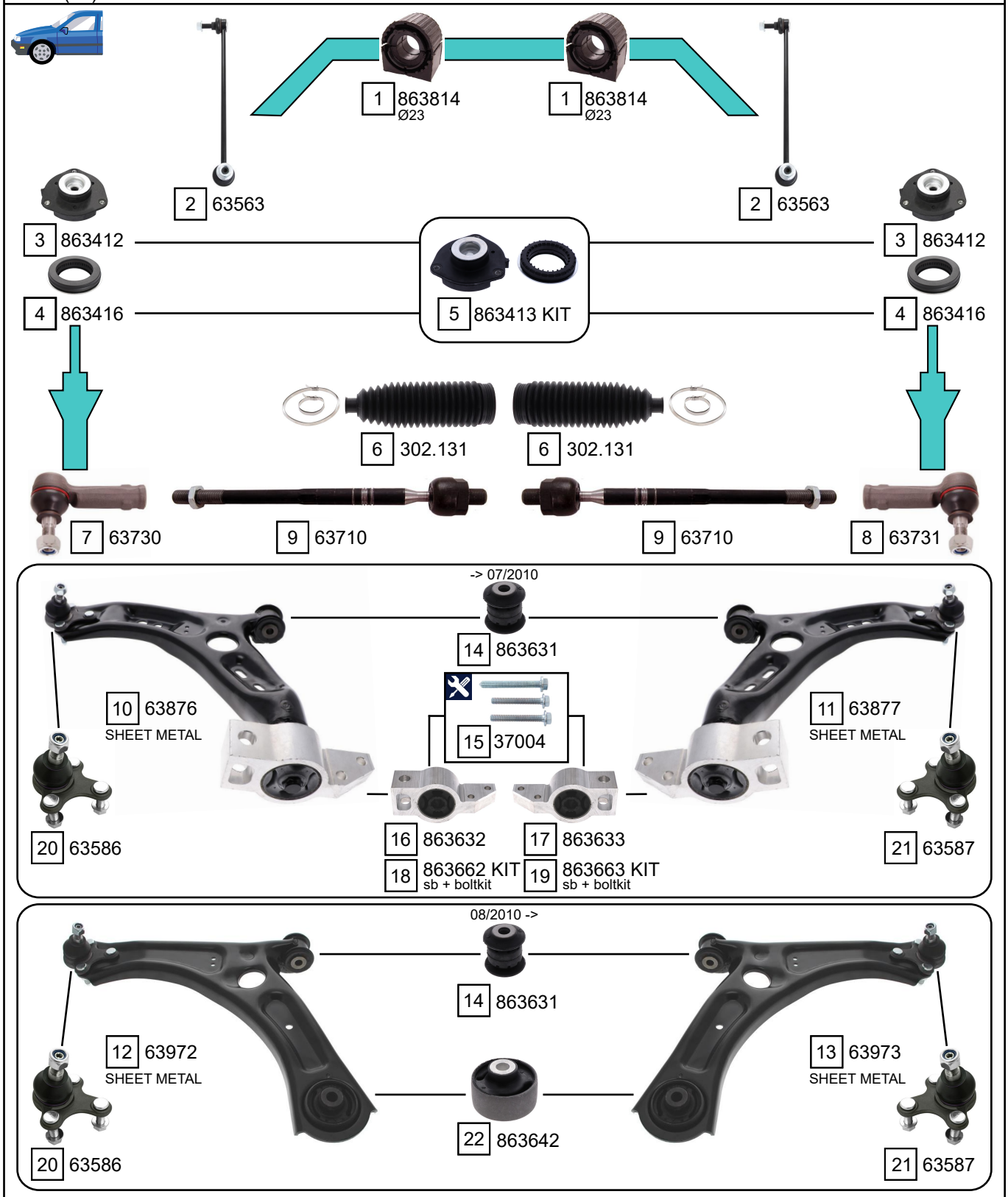

Ref.	Sidem Ref.	description	OE-number	measures	Ref.	Sidem Ref.	description	OE-number	measures
1	863814	stabiliser mounting	Part of	di:21	12	63972	TCA left wbj	1K0 407 151 BG	c:15.4
2	63563	stabiliser link	5Q0 411 315 A	L:335	13	63973	TCA right wbj	1K0 407 152 BG	c:15.4
3	863412	strut mount	1K0 412 331 B	di:14.2 L:49.5	14	863631	silentblock for TCA	1K0 407 182	di:12.1 do:40 (*)
4	863416	bearing	1K0 412 249 B	di:68.5 do:112 L:25.5	15	37004	mounting kit	N 910 398 02 S1	th:M10x1.5R
5	863413 KIT	strut mount kit	1K0 412 331 B S1	di:14.2 L:50	16	863632	silentblock for TCA	1K0 199 231 J	di:18.8 (*)
6	302.131	steering rack gaiter	1K0 423 831 A	D:50 d:15 L:193	17	863633	silentblock for TCA	1K0 199 232 J	di:18.8 (*)
7	63730	tie rod end left	1K0 423 811 J S1	c:13.2 th:FM16x1.5R	18	863662 KIT	silentblock kit	1K0 199 231 J S1	
8	63731	tie rod end right	1K0 423 812 J S1	c:13.2 th:FM16x1.5R	19	863663 KIT	silentblock kit	1K0 199 232 J S1	
9	63710	axial joint	1K0 423 810 A	th:MM16X1.5R L:312	20	63586	ball joint left	1K0 407 365 C	c:15.4
10	63876	TCA left wbj	1K0 407 151 BC S1	c:15.4	21	63587	ball joint right	1K0 407 366 C	c:15.4
11	63877	TCA right wbj	1K0 407 152 BC S2	c:15.4	22	863642	silentblock for TCA	1K0 407 183 M	di:13.4 do:65 (*)

Copyright 2021

YETI (5L) 05/2009 - 12/2017

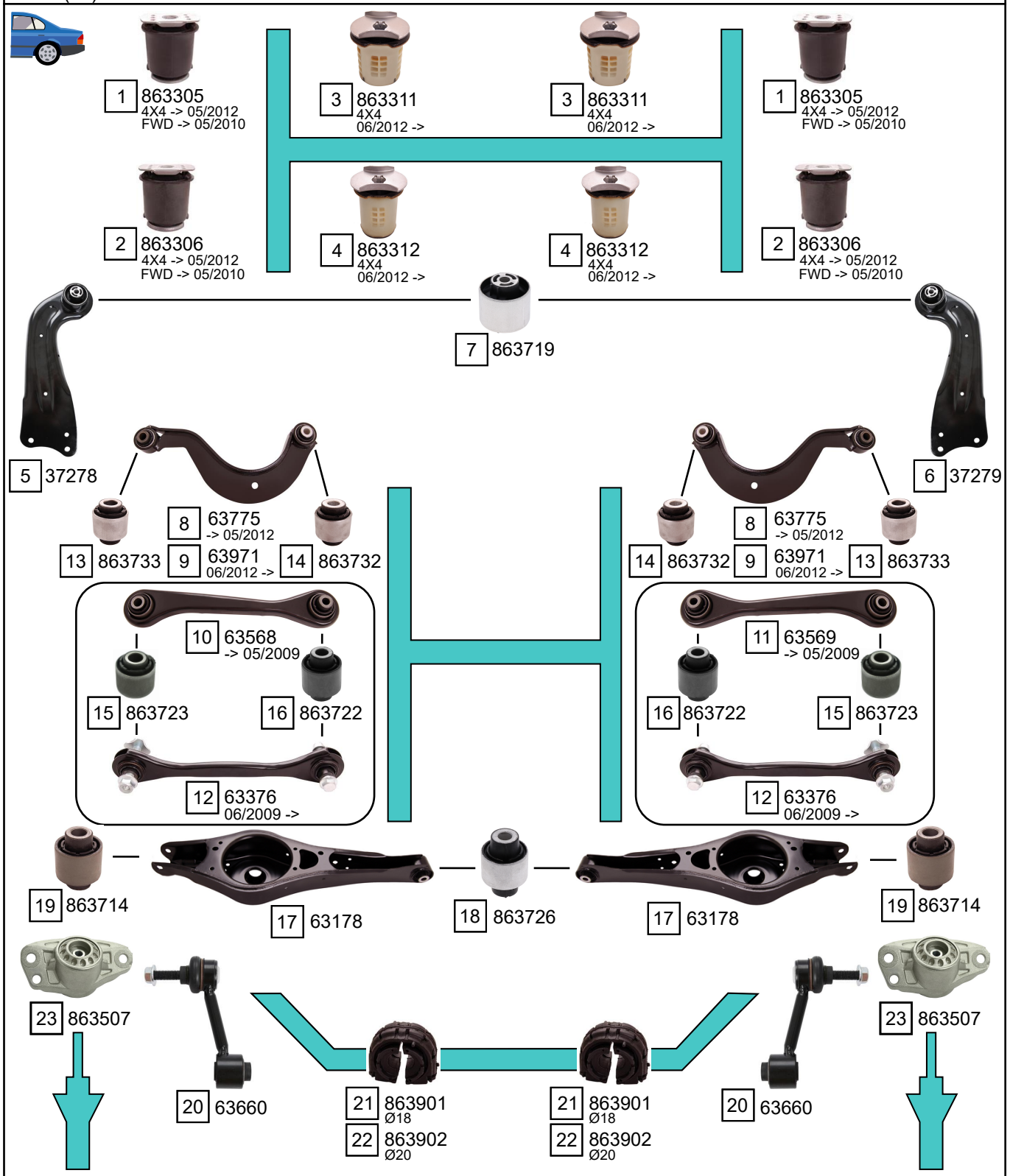

Ref.	Sidem Ref.	Description	OE-number	Measures	Ref.	Sidem Ref.	Description	OE-number	Measures
1	863305	mounting axle body	1K0 505 145 J	di:18 do:70	13	863733	silentblock for TCA	Part of	di:14.3 do:38.2 (*)
2	863306	mounting axle body	1K0 505 145 K	di:18 do:70	14	863732	silentblock for TCA	Part of	di:12.1 do:38.3 (*)
3	863311	mounting axle body	5Q0 505 145 F	di:18.2 do:61.5	15	863723	silentblock for TCA	Part of	di:14.2 do:40.1 (*)
4	863312	mounting axle body	5Q0 505 145 E	di:18.6 do:53.5	16	863722	silentblock for TCA	Part of	di:12.1 do:40.4 (*)
5	**37278**	TCA left	1K0 505 223 K	L:373	17	63178	TCA	1K0 505 311 AB	
6	37279	TCA right	1K0 505 224 K	L:373	18	863726	silentblock for TCA	Part of	di:12.1 do:42 (*)
7	863719	mounting axle body	3C0 505 541	di:12.2 do:60.2 (*)	19	863714	silentblock for TCA	1K0 505 553 A	di:12.2 do:37.4 (*)
8	63775	track rod	1K0 505 323 N	L:305.5	20	63660	stabiliser link rear axle	1K0 505 465 K	L:95
9	63971	track rod	5Q0 505 323 C	L:305	21	863901	stabiliser mounting	1K0 511 327 AP	di:17
10	63568	track rod	1K0 501 529 F	L:298	22	863902	stabiliser mounting	1K0 511 327 AQ	di:19
11	63569	track rod	1K0 501 530 C	L:298	23	863507	strut mount	3C0 513 353 C	di:10.5 do:68 L:62.7
12	63376	track rod	1K0 501 529 H	L:298					

Copyright 2021