VOLKSWAGEN
AMAROK

AMAROK 09/2010 ->

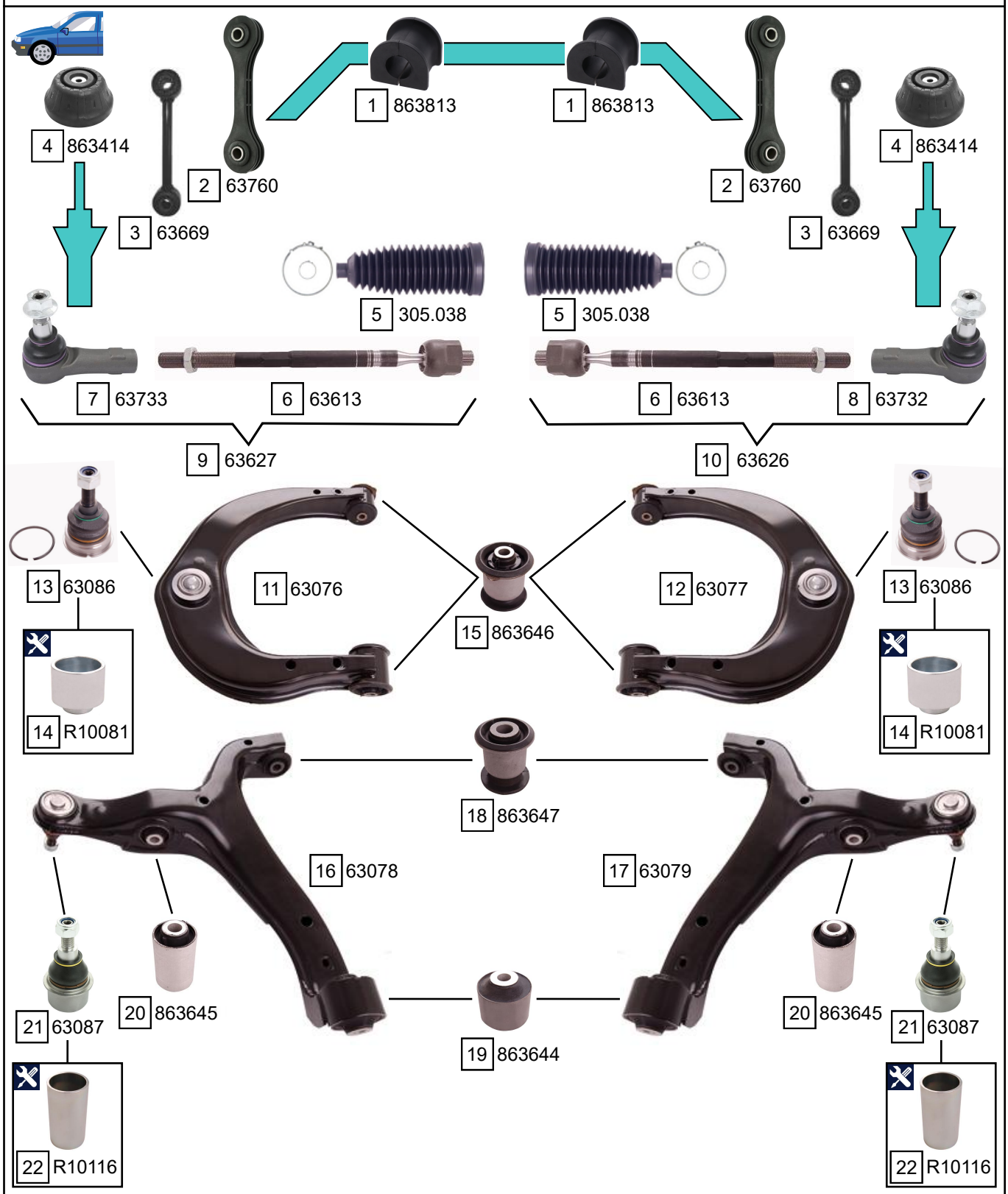

Ref.	Sidem Ref.	description	OE-number	measures	Ref.	Sidem Ref.	description	OE-number	measures
1	863813	stabiliser mounting	2H0 411 313 D	di:27	12	63077	TCA right wbj	2H0 407 022 B	c:15.7
2	63760	stabiliser link	2H0 411 317 B	L:145	13	63086	ball joint upper	Part of	c:15.7 do:45.1
3	63669	stabiliser link	2H0 411 317	L:145	14	R10081	mounting tool ring ø50 ø42	SEE PAGE III	di:42 do:50
4	863414	strut mount	2H0 412 331 B	di:12.3 do:140 L:60	15	863646	silentblock for TCA	2H0 407 077 A	di:10.2 do:40.25 (*)
5	305.038	steering rack gaiter	7L0 422 831 A	D:66 d:16 L:195	16	63078	TCA left wbj	2H0 407 151 A	c:20.7
6	63613	axial joint	Part of	th:MM16X1.5R L:293	17	63079	TCA right wbj	2H0 407 152 A	c:20.7
7	63733	tie rod end	7L0 422 818 D	c:16.5 th:FM16X1.5R	18	863647	silentblock for TCA	2H0 407 183 A	di:14.2 do:40.4 (*)
8	63732	tie rod end	7L0 422 817 D	c:16.5 th:FM16X1.5R	19	863644	silentblock for TCA	2H0 407 182 A	di:14.2 do:60.25 (*)
9	63627	tie rod	7L0 422 804 D	c:16.5	20	863645	silentblock for TCA	2H0 412 333 A	di:14.2 do:46.2 (*)
10	63626	tie rod	7L0 422 803 D	c:16.5	21	63087	ball joint lower	Part of	c:20.8 do:49
11	63076	TCA left wbj	2H0 407 021 B	c:15.7	22	R10116	mounting tool ring long ø62	SEE PAGE III	di:54 do:62

Copyright 2021

VOLKSWAGEN
AMAROK

AMAROK 09/2010 ->

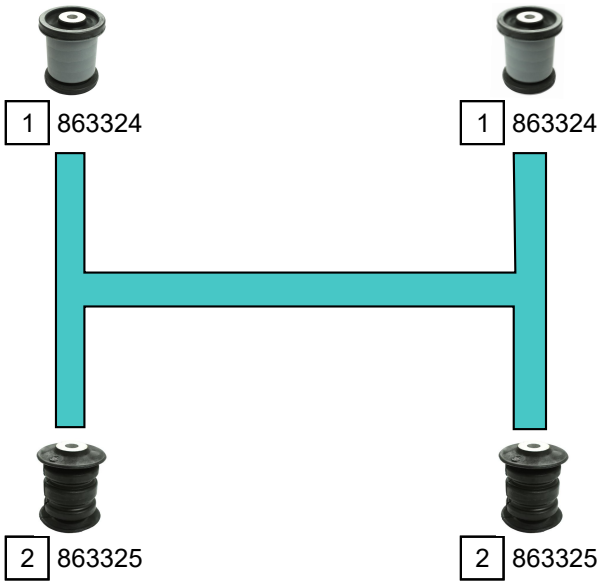

Ref.	Sidem Ref.	Description	OE-number	Measures	Ref.	Sidem Ref.	Description	OE-number	Measures
1	863324	spring bush	2H0 511 413 B	di:12.2 do:60.9	2	863325	spring bush	2H0 511 414 A	di:12.1 do:51.6

Copyright 2021

VOLKSWAGEN
ARTEON

ARTEON (3H7) 04/2017 ->

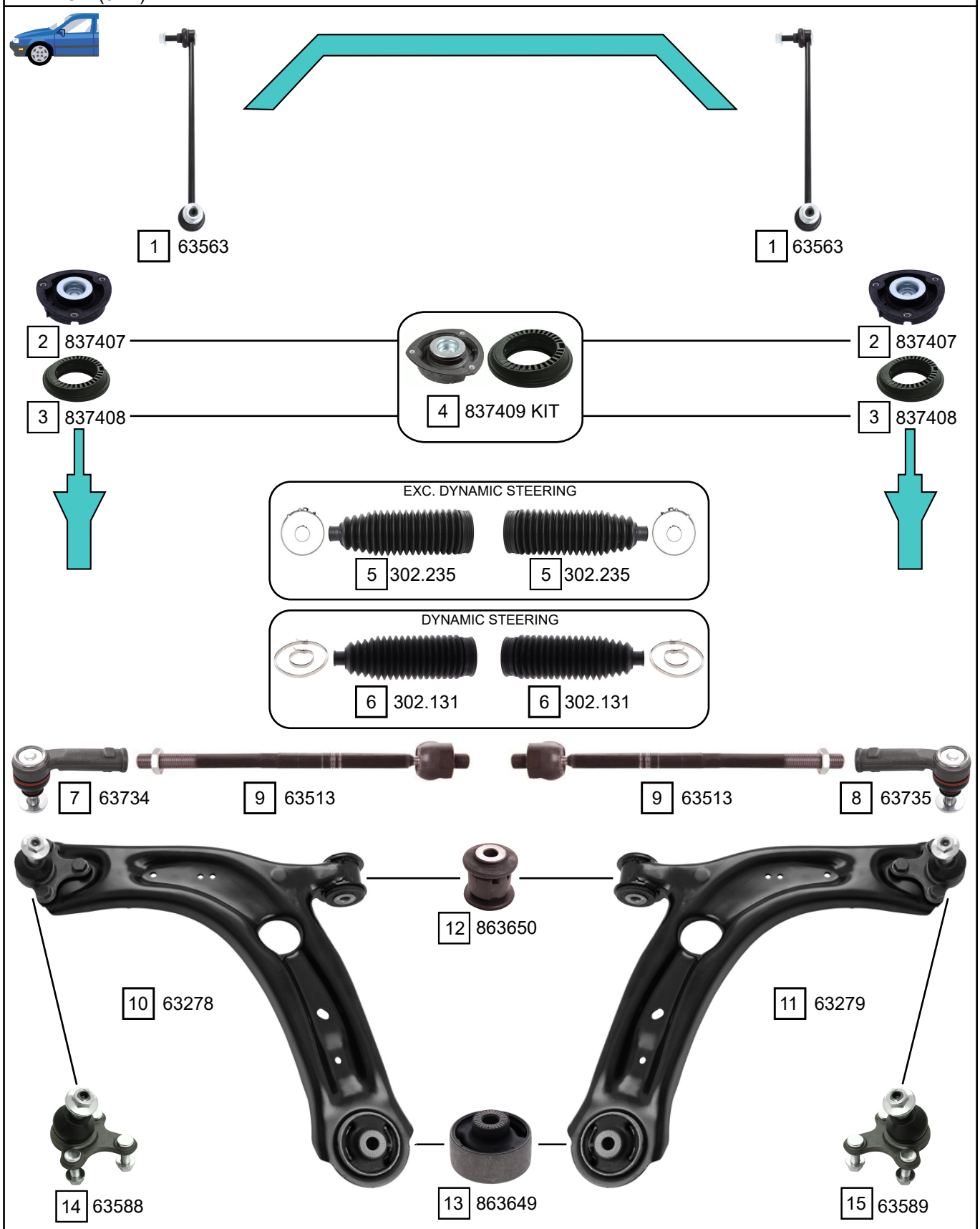

Ref.	Sidem Ref.	Description	OE-number	Measures	Ref.	Sidem Ref.	Description	OE-number	Measures
1	63563	stabiliser link	5Q0 411 315 A	L:335	9	63513	axial joint	561 423 810	th:MM16X1.5R L:330
2	837407	strut mount	5Q0 412 331 E	di:14.6 do:64.1 L:42	10	63278	TCA left wbj	3Q0 407 151 E S1	c:15.2
3	837408	bearing	5Q0 412 249 F	di:74 do:127 L:38.6	11	63279	TCA right wbj	3Q0 407 152 E S1	c:15.2
4	837409 KIT	strut mount kit	5Q0 412 331 E S1	di:14.6 do:127	12	863650	silentblock for TCA	5Q0 407 182	di:12.1 do:40.1 (*)
5	302.235	steering rack gaiter	5Q0 423 831	D:53.5 d:15.5 L:191	13	863649	silentblock for TCA	5Q0 407 183 E	di:12.9 do:65 (*)
6	302.131	steering rack gaiter	1K0 423 831 A	D:50 d:15 L:193	14	63588	ball joint left	3C0 407 365 B	c:15.2
7	63734	tie rod end left	1K0 423 811 J S2	c:13.2 th:FM16X1.5R	15	63589	ball joint right	3C0 407 366 B	c:15.2
8	63735	tie rod end right	1K0 423 812 J S2	c:13.2 th:FM16X1.5R					

Copyright 2021

VOLKSWAGEN
ARTEON

ARTEON (3H7) 04/2017 ->

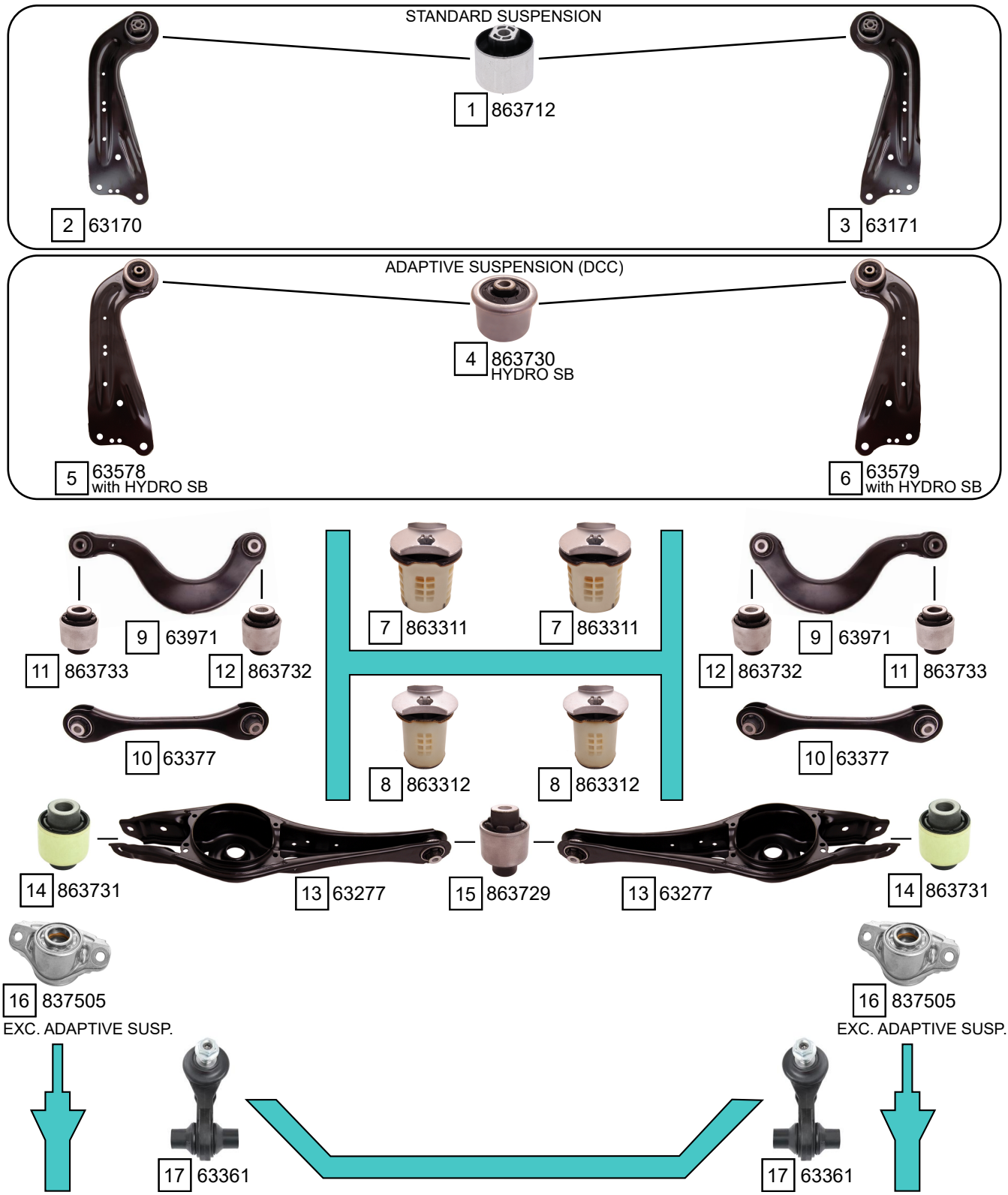

Ref.	Sidem Ref.	Description	OE-number	Measures	Ref.	Sidem Ref.	Description	OE-number	Measures
1	863712	silentblock for TCA	1K0 505 541 B	di:12.2 do:60.2 (*)	10	63377	track rod	5Q0 501 529 F	L:282
2	63170	TCA left	5Q0 505 223 D	L:384	11	863733	silentblock for TCA	Part of	di:14.3 do:38.2 (*)
3	63171	TCA right	5Q0 505 224 D	L:384	12	863732	silentblock for TCA	Part of	di:12.1 do:38.3 (*)
4	863730	silentblock for TCA	3Q0 505 541 A	di:12.1 do:65.2 (*)	13	63277	TCA	3Q0 505 311 G	
5	63578	TCA left	3Q0 505 223		14	863731	silentblock for TCA	5Q0 505 553	di:12.1 do:37.4 (*)
6	63579	TCA right	3Q0 505 224		15	863729	silentblock for TCA	Part of	di:12.1 do:44.3 (*)
7	863311	mounting axle body	5Q0 505 145 F	di:18.2 do:61.5	16	837505	strut mount	5Q0 513 353 G	di:10.2 do:65.8 L:63.3
8	863312	mounting axle body	5Q0 505 145 E	di:18.6 do:53.5	17	63361	stabiliser link rear axle	5Q0 505 465 C	L:70
9	63971	track rod	5Q0 505 323 C	L:305					

Copyright 2021

VOLKSWAGEN
BEETLE

BEETLE (5C1) 04/2011 - 07/2019
BEETLE CABRIO (5C7) 12/2012 - 07/2019

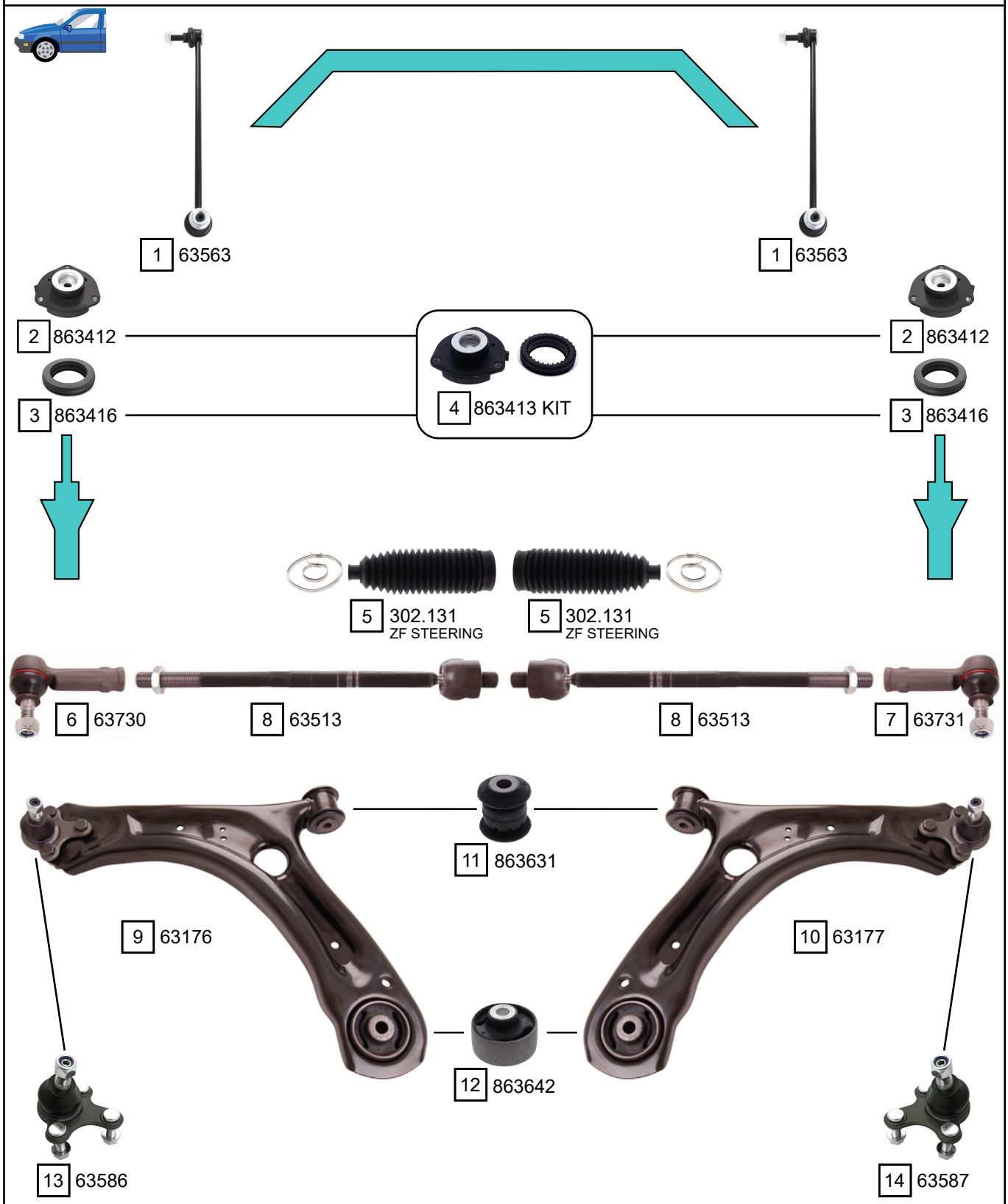

Ref.	Sidem Ref.	Description	OE-number	Measures	Ref.	Sidem Ref.	Description	OE-number	Measures
1	63563	stabiliser link	5Q0 411 315 A	L:335	8	63513	axial joint	561 423 810	th:MM16X1.5R L:330
2	863412	strut mount	1K0 412 331 B	di:14.2 L:49.5	9	63176	TCA left wbj	561 407 151 C	c:15.4
3	863416	bearing	1K0 412 249 B	di:68.5 do:112 L:25.5	10	63177	TCA right wbj	561 407 152 C	c:15.4
4	863413 KIT	strut mount kit	1K0 412 331 B S1	di:14.2 L:50	11	863631	silentblock for TCA	1K0 407 182	di:12.1 do:40 (*)
5	302.131	steering rack gaiter	1K0 423 831 A	D:50 d:15 L:193	12	863642	silentblock for TCA	1K0 407 183 M	di:13.4 do:65 (*)
6	63730	tie rod end left	1K0 423 811 J S1	c:13.2 th:FM16x1.5R	13	63586	ball joint left	1K0 407 365 C	c:15.4
7	63731	tie rod end right	1K0 423 812 J S1	c:13.2 th:FM16x1.5R	14	63587	ball joint right	1K0 407 366 C	c:15.4

Copyright 2021

VOLKSWAGEN
BEETLE

SIDEM
Experts know why

BEETLE (5C1, 5C2) 04/2011 - 07/2019
BEETLE CABRIO (5C7, 5C8) 12/2012 - 07/2019

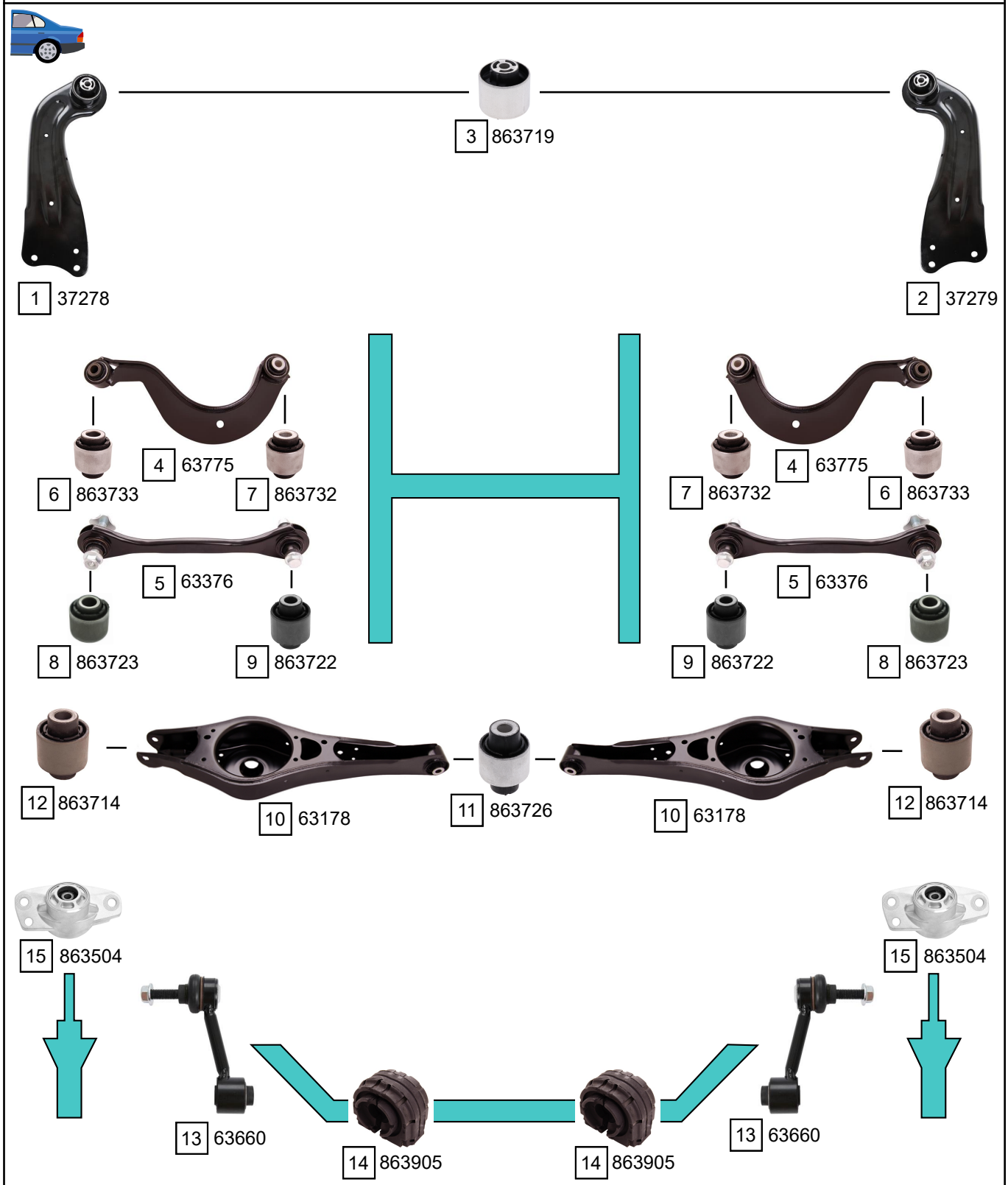

Ref.	Sidem Ref.	Description	OE-number	Measures	Ref.	Sidem Ref.	Description	OE-number	Measures
1	37278	TCA left	1K0 505 223 K	L:373	9	863722	silentblock for TCA	Part of	di:12.1 do:40.4 (*)
2	37279	TCA right	1K0 505 224 K	L:373	10	63178	TCA	1K0 505 311 AB	
3	863719	mounting axle body	3C0 505 541	di:12.2 do:60.2 (*)	11	863726	silentblock for TCA	Part of	di:12.1 do:42 (*)
4	63775	track rod	1K0 505 323 N	L:305.5	12	863714	silentblock for TCA	1K0 505 553 A	di:12.2 do:37.4 (*)
5	63376	track rod	1K0 501 529 H	L:298	13	63660	stabiliser link rear axle	1K0 505 465 K	L:95
6	863733	silentblock for TCA	Part of	di:14.3 do:38.2 (*)	14	863905	stabiliser mounting	1K0 511 327 BA	di:15
7	863732	silentblock for TCA	Part of	di:12.1 do:38.3 (*)	15	863504	strut mount	1K0 513 353 G	di:10.5 do:63 L:62
8	863723	silentblock for TCA	Part of	di:14.2 do:40.1 (*)					

Copyright 2021

BORA (1J2) 10/1998 - 09/2005
BORA VARIANT (1J6) 05/1999 - 05/2005

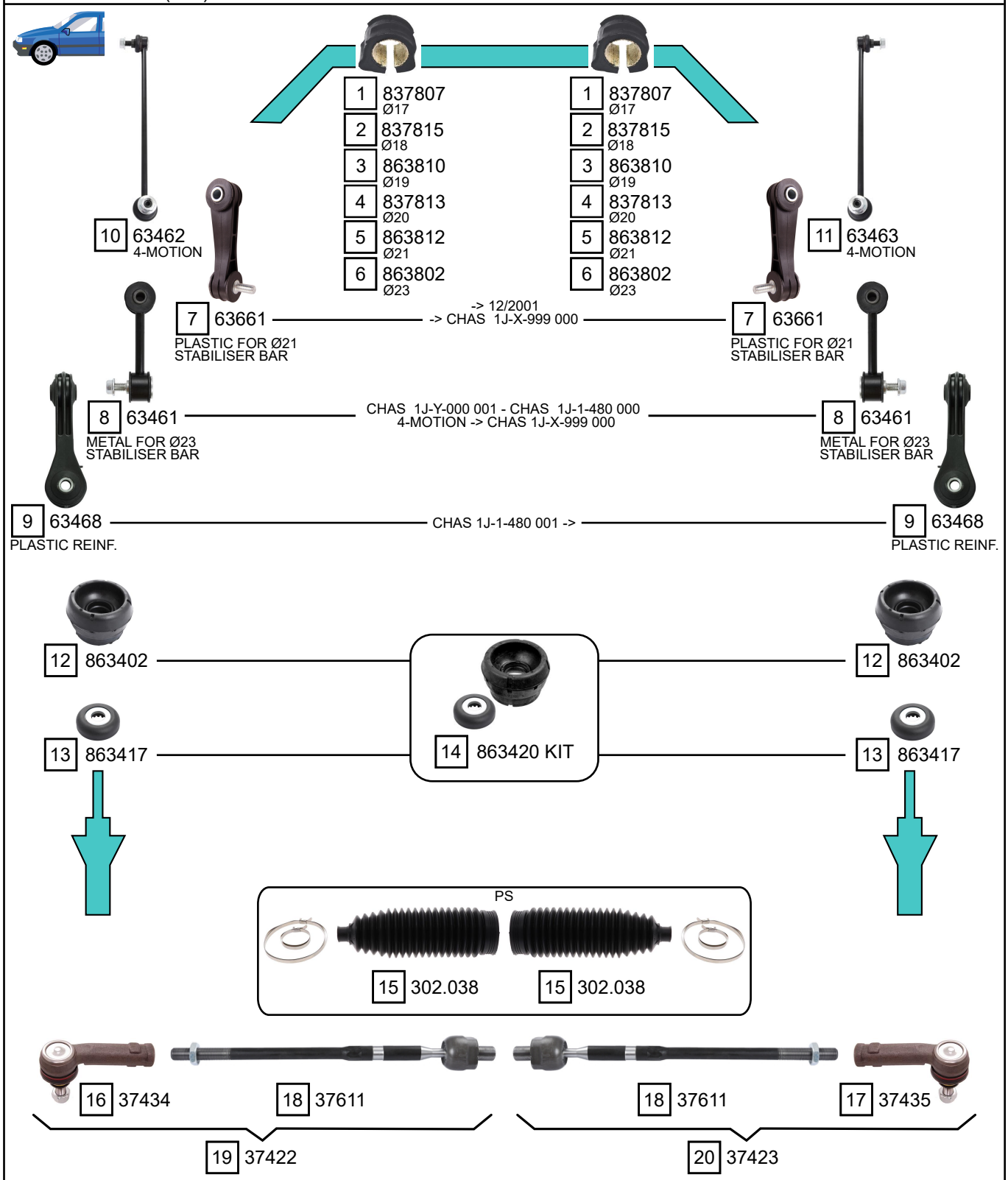

Ref.	Sidem Ref.	Description	OE-number	Measures	Ref.	Sidem Ref.	Description	OE-number	Measures
1	837807	stabiliser mounting	1J0 411 314 S	di:17	11	63463	stabiliser link right	1J0 411 316 D	L:336
2	837815	stabiliser mounting	1J0 411 314 AC	di:18	12	863402	strut mount	1J0 412 331 C	di:26 do:82 L:53
3	863810	stabiliser mounting	1J0 411 314 R	di:19	13	863417	bearing	1J0 412 249	di:14.3 do:45.3 L:13.4
4	837813	stabiliser mounting	1J0 411 314 P	di:19	14	863420 KIT	strut mount kit	1J0 412 331 C S1	di:26 do:82 L:53
5	863812	stabiliser mounting	1J0 411 314 T	di:21	15	302.038	steering rack gaiter	1J0 422 831 B	D:50 d:15 L:186
6	863802	stabiliser mounting	1J0 411 314 G	di:23	16	37434	tie rod end left	1J0 422 811 B	c:13.2 th:FM14x1.5R
7	63661	stabiliser link	1J0 411 315 J	L:105	17	37435	tie rod end right	1J0 422 812 B	c:13.2 th:FM14x1.5R
8	63461	stabiliser link	1J0 411 315 G	L:105	18	37611	axial joint	Part of	th:MM16X1.5R L:319
9	63468	stabiliser link	1J0 411 315 K	L:105	19	37422	tie rod left	1J0 422 803 H	c:13.2
10	63462	stabiliser link left	1J0 411 315 D	L:336	20	37423	tie rod right	1J0 422 804 H	c:13.2

Copyright 2021

VOLKSWAGEN
BORA

BORA (1J2) 10/1998 - 09/2005
BORA VARIANT (1J6) 05/1999 - 05/2005

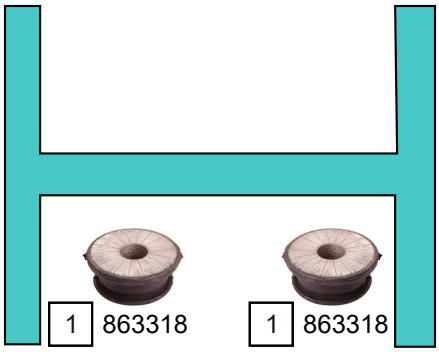

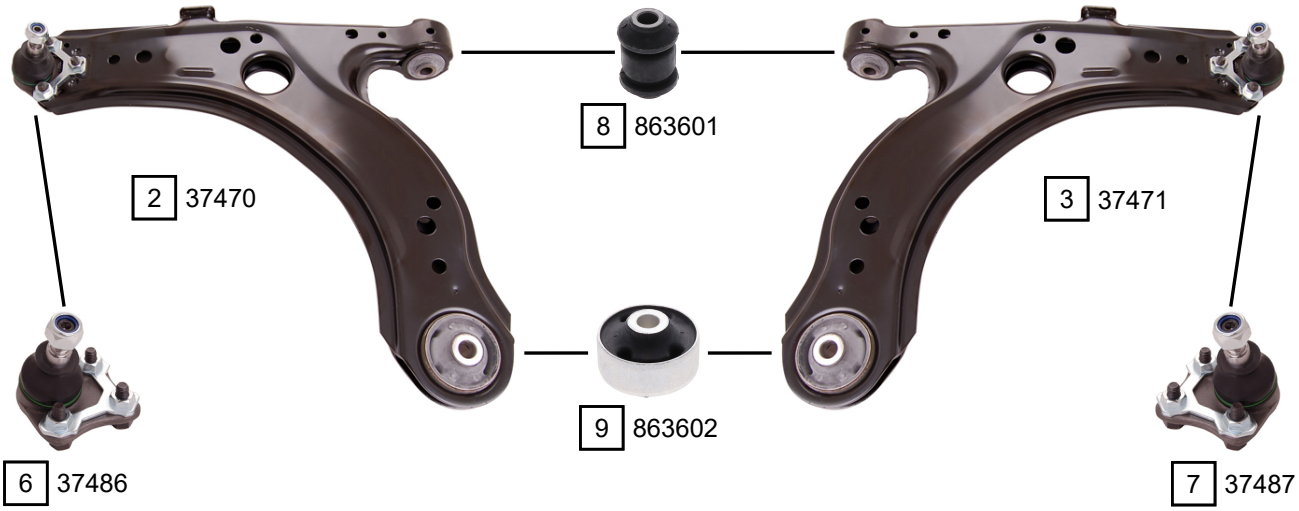

REINFORCED - ONLY REPLACE IN PAIRS

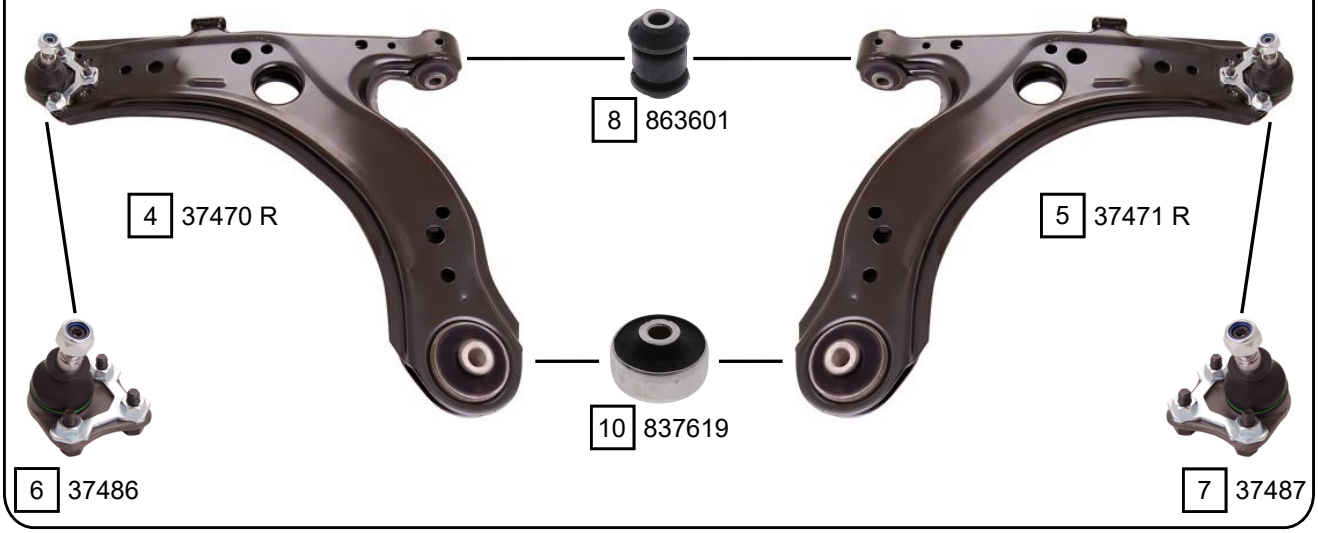

Ref.	Sidem Ref.	Description	OE-number	Measures	Ref.	Sidem Ref.	Description	OE-number	Measures
1	863318	mounting axle body	1J0 199 429	di:18.2 do:50.5	6	37486	ball joint left	1J0 407 365 J	c:14.9
2	37470	TCA left wbj	1J0 407 151 C S1	c:14.9	7	37487	ball joint right	1J0 407 366 J	c:14.9
3	37471	TCA right wbj	1J0 407 151 C S2	c:14.9	8	863601	silentblock for TCA	357 407 182	di:12 do:32.6 (*)
4	37470 R	TCA left wbj	1J0 407 151 C S1 R	c:14.9	9	863602	silentblock for TCA	1J0 407 181	di:13 do:60 (*)
5	37471 R	TCA right wbj	1J0 407 151 C S2 R	c:14.9	10	837619	silentblock for TCA	6R0 407 181 B	di:13.2 do:60.2 (*)

Copyright 2021

VOLKSWAGEN
BORA

BORA (1J2) 10/1998 - 09/2005
BORA VARIANT (1J6) 05/1999 - 05/2005

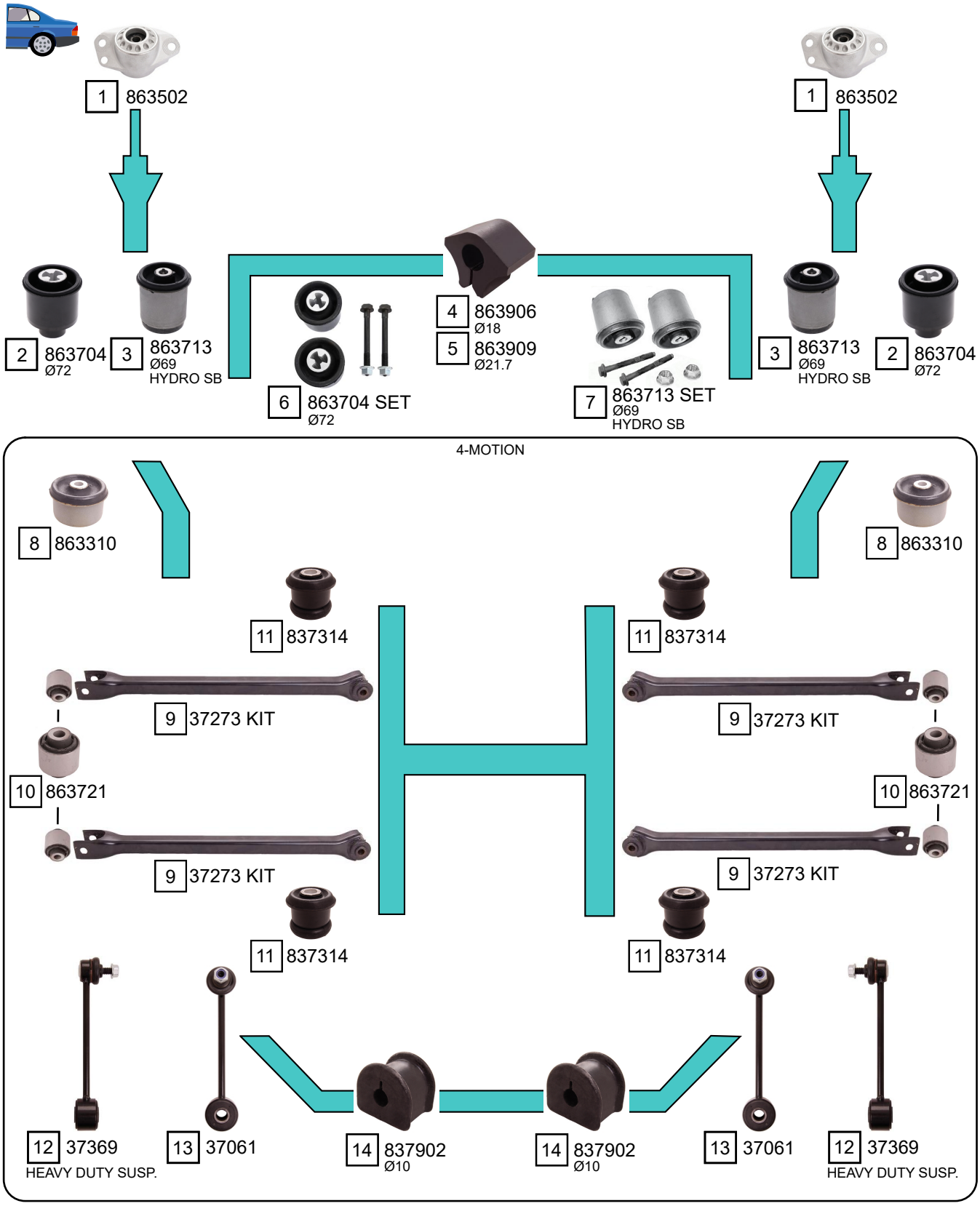

Ref.	Sidem Ref.	Description	OE-number	Measures	Ref.	Sidem Ref.	Description	OE-number	Measures
1	863502	strut mount	6R0 513 353	di:11.1 do:62 L:58.8	8	863310	mounting axle body	1J0 505 171 B	di:12 do:72
2	863704	mounting axle body	1J0 501 541 C	di:12 do:71.5	9	37273 KIT	track rod	1J0 505 323 L S1	L:517
3	863713	mounting axle body	1J0 501 541 D	di:13.2 do:69	10	863721	silentblock for TCA	1J0 505 203	di:12.3 do:43.6 (*)
4	863906	stabiliser mounting	871 511 423	di:16.5	11	837314	mounting axle body	1J0 505 145 B	di:16 do:51.6
5	863909	stabiliser mounting	1J0 511 423	di:18	12	37369	stabiliser link	1J0 505 466 C	L:194
6	863704 SET	mounting axle body set	1J0 501 541 C S1	do:71.5	13	37061	stabiliser link rear axle	1J0 505 466 B	L:175
7	863713 SET	mounting axle body set	1J0 501 541 D S1	do:69	14	837902	stabiliser mounting	8D0 511 327 C	di:10.5

Copyright 2021

VOLKSWAGEN
CADDY

CADDY I (14) 08/1982 - 07/1992

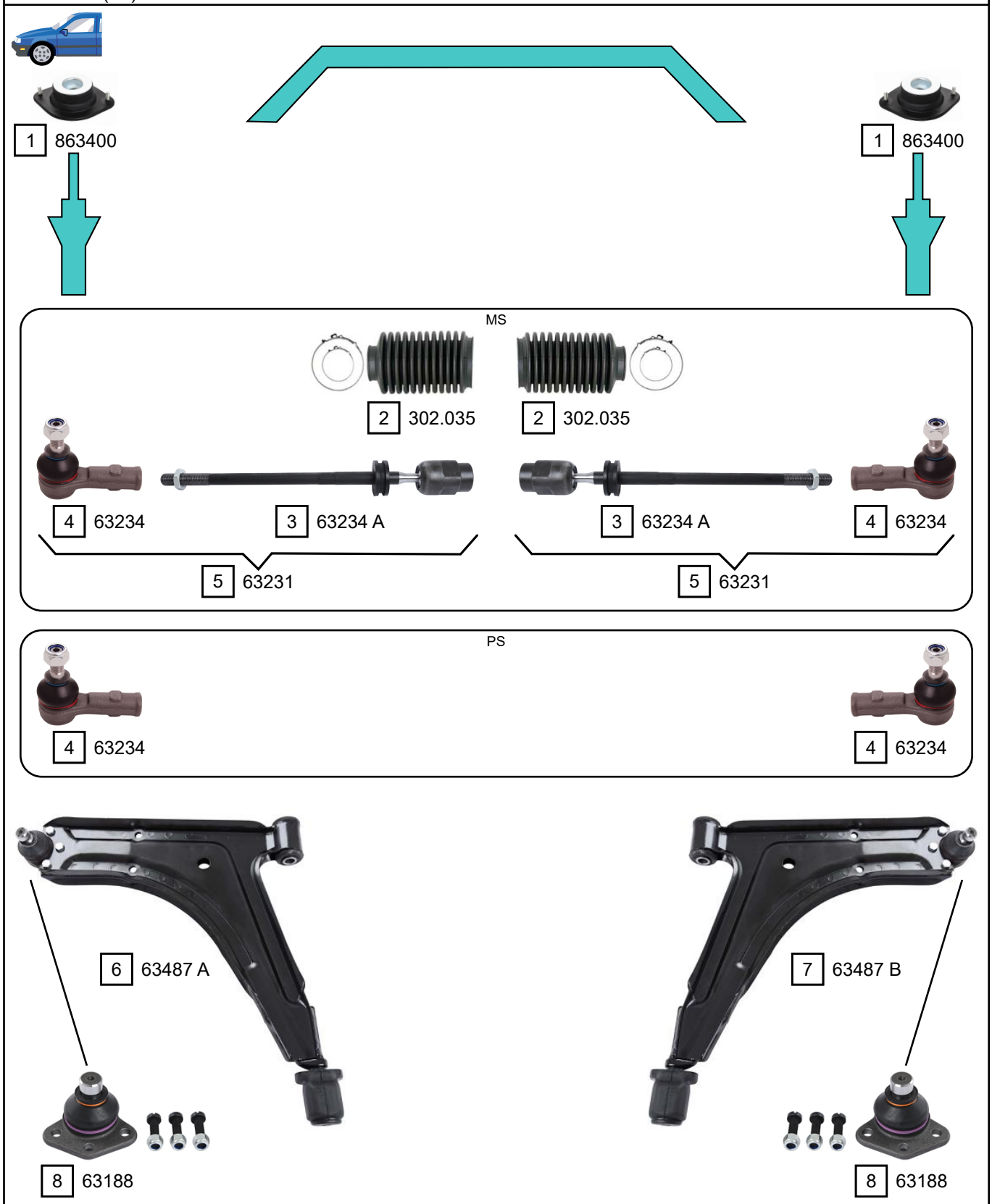

Ref.	Sidem Ref.	Description	OE-number	Measures	Ref.	Sidem Ref.	Description	OE-number	Measures
1	863400	strut mount	171 412 329 A	di:14.2 do:81.5 L:53	5	63231	tie rod	171 419 804	c:12.6
2	302.035	steering rack gaiter	191 419 831	D:41 d:25 L:120	6	63487 A	TCA left wbj	171 407 153 D S1	c:17
3	63234 A	axial joint	Part of	th:FM22X1.5R L:340	7	63487 B	TCA right wbj	171 407 153 D S2	c:17
4	63234	tie rod end	171 419 812	c:12.6 th:FM14x1.5R	8	63188	ball joint lower	171 407 365 G	c:17

Copyright 2021

VOLKSWAGEN
CADDY

CADDY II (9K9) 11/1995 - 02/2004

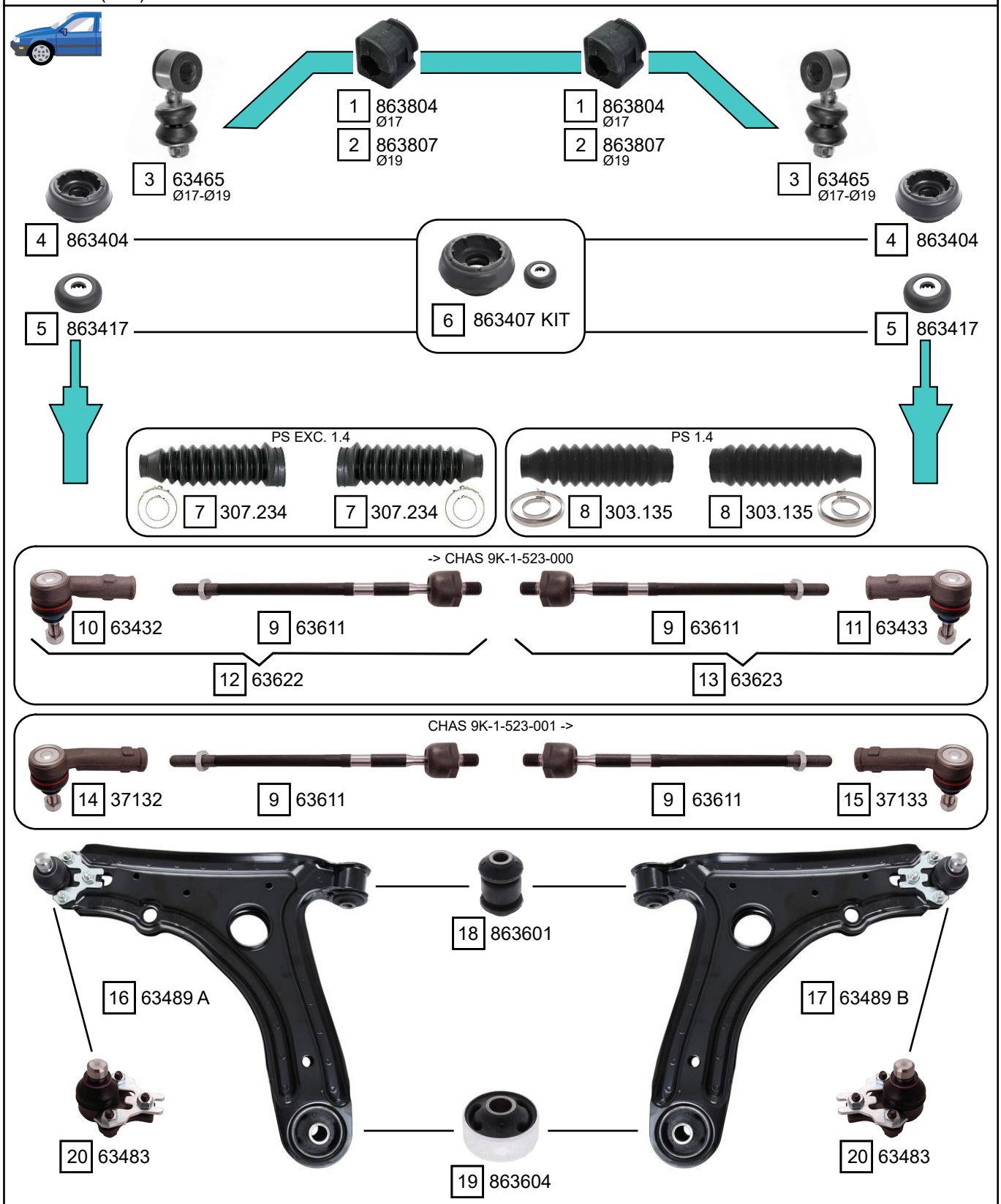

Ref.	Sidem Ref.	Description	OE-number	Measures	Ref.	Sidem Ref.	Description	OE-number	Measures
1	863804	stabiliser mounting	191 411 314	di:17	11	63433	tie rod end right	6N0 422 812	c:12.6 th:FM14x1.5R
2	863807	stabiliser mounting	1H0 411 314	di:19	12	63622	tie rod left	6K0 422 803 D	c:12.6
3	63465	stabiliser link	6K0 411 315	L:78	13	63623	tie rod right	6K0 422 804 D	c:12.6
4	863404	strut mount	7M0 412 331	di:26.5 do:96.7 L:50	14	37132	tie rod end	6X0 422 811	c:12.7 th:FM14X1.5R
5	863417	bearing	1J0 412 249	di:14.3 do:45.3 L:13.4	15	37133	tie rod end	6X0 422 812	c:12.7 th:FM14X1.5R
6	863407 KIT	strut mount kit	7M0 412 331 S1	di:14.3 do:98 L:50	16	63489 A	TCA left wbj	191 407 151 B S1	c:19
7	307.234	steering rack gaiter	1H0 422 831 B	D:41 d:10 L:210	17	63489 B	TCA right wbj	191 407 151 B S2	c:19
8	303.135	steering rack gaiter	6N0 422 831	D:42 d:11 L:208	18	863601	silentblock for TCA	357 407 182	di:12 do:32.6 (*)
9	63611	axial joint	Part of	th:MM14X1.5R L:319	19	863604	silentblock for TCA	191 407 181 D	di:17 do:60.1 (*)
10	63432	tie rod end left	6N0 419 811	c:12.6 th:FM14x1.5R	20	63483	ball joint lower	357 407 365 A	c:19

Copyright 2021

VOLKSWAGEN
CADDY

CADDY II (9U7 PICK-UP) 10/1996 - 12/2000

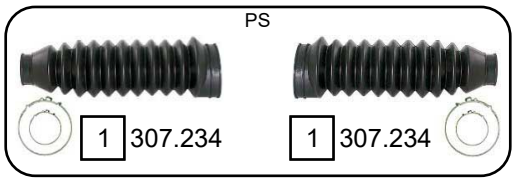

2 57039

3 57010

3 57010

2 57039

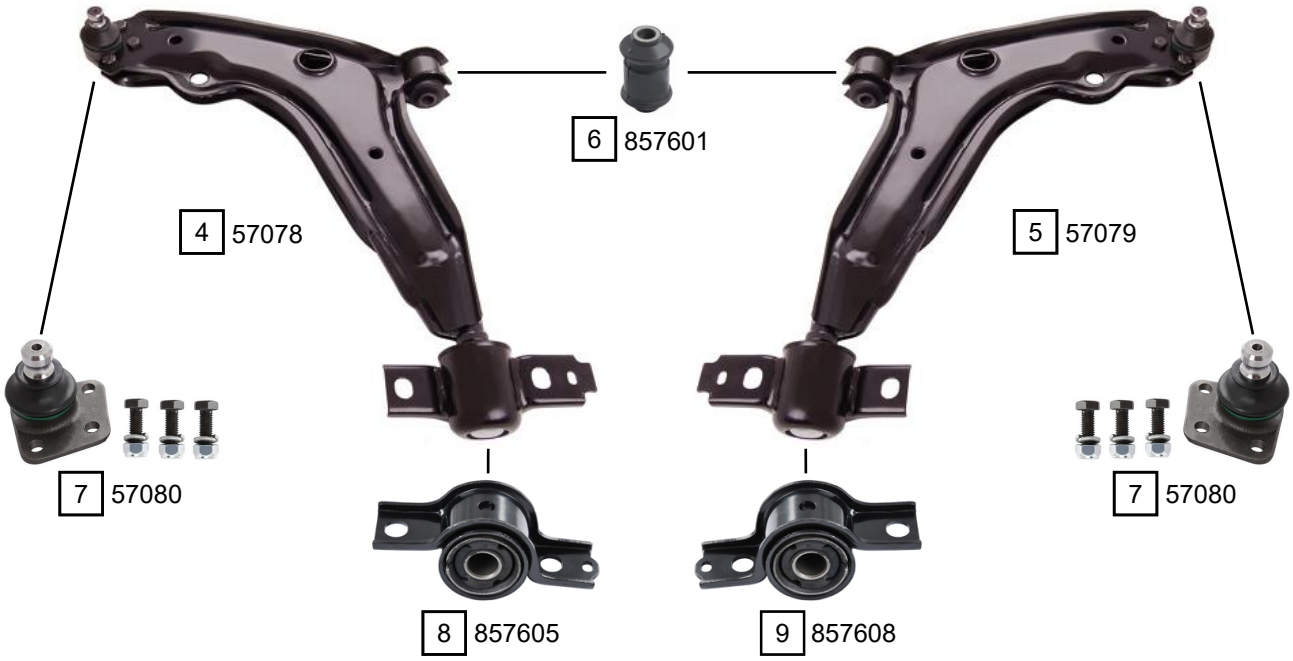

Ref.	Sidem Ref.	Description	OE-number	Measures	Ref.	Sidem Ref.	Description	OE-number	Measures
1	307.234	steering rack gaiter	1H0 422 831 B	D:41 d:10 L:210	6	857601	silentblock for TCA	6U0 407 182	di:12.1 do:31.5 (*)
2	57039	tie rod end	6U0 422 811	c:12.6 th:FM12x1R	7	57080	ball joint	6U0 407 365	c:17
3	57010	axial joint	6U0 422 807	th:MM14X1.5R L:324	8	857605	silentblock for TCA	6U6 407 359 A	di:18.1 (*)
4	57078	TCA left wbj	6U0 407 151 A	c:17	9	857608	silentblock for TCA	6U6 407 360 A	di:18.1 (*)
5	57079	TCA right wbj	6U0 407 152 A	c:17					

Copyright 2021

CADDY III (2K_,2C_) 02/2004 - 05/2015

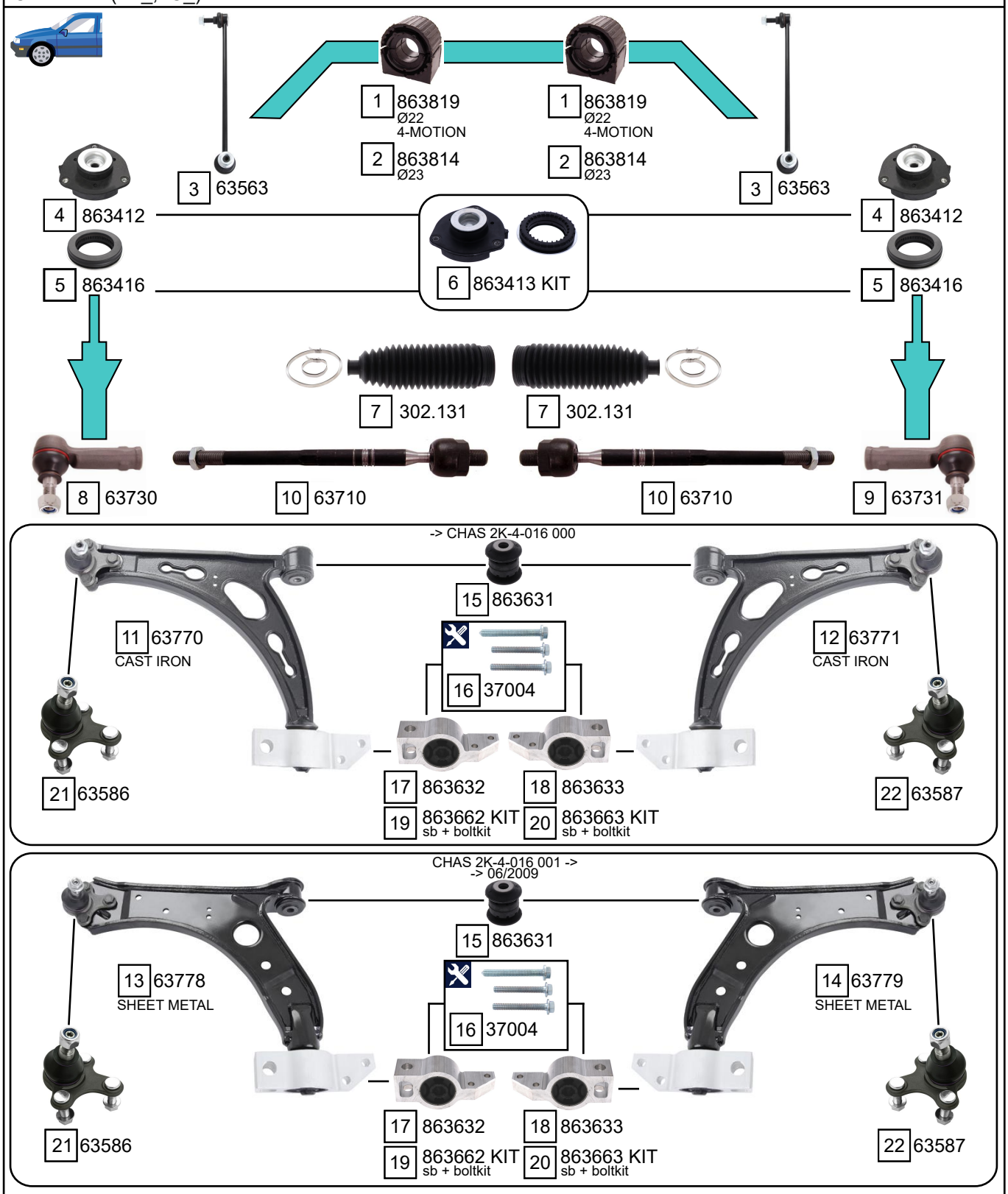

Ref.	Sidem Ref.	description	OE-number	measures	Ref.	Sidem Ref.	description	OE-number	measures
1	863819	stabiliser mounting	Part of	di:20	12	63771	TCA right wbj	1K0 407 152 AC	c:15.4
2	863814	stabiliser mounting	Part of	di:21	13	63778	TCA left wbj	1K0 407 151 AA S1	c:15.4
3	63563	stabiliser link	5Q0 411 315 A	L:335	14	63779	TCA right wbj	1K0 407 152 AA S2	c:15.4
4	863412	strut mount	1K0 412 331 B	di:14.2 L:49.5	15	863631	silentblock for TCA	1K0 407 182	di:12.1 do:40 (*)
5	863416	bearing	1K0 412 249 B	di:68.5 do:112 L:25.5	16	37004	mounting kit	N 910 398 02 S1	th:M10x1.5R
6	863413 KIT	strut mount kit	1K0 412 331 B S1	di:14.2 L:50	17	863632	silentblock for TCA	1K0 199 231 J	di:18.8 (*)
7	302.131	steering rack gaiter	1K0 423 831 A	D:50 d:15 L:193	18	863633	silentblock for TCA	1K0 199 232 J	di:18.8 (*)
8	63730	tie rod end left	1K0 423 811 J S1	c:13.2 th:FM16x1.5R	19	863662 KIT	silentblock kit	1K0 199 231 J S1	
9	63731	tie rod end right	1K0 423 812 J S1	c:13.2 th:FM16x1.5R	20	863663 KIT	silentblock kit	1K0 199 232 J S1	
10	63710	axial joint	1K0 423 810 A	th:MM16X1.5R L:312	21	63586	ball joint left	1K0 407 365 C	c:15.4
11	63770	TCA left wbj	1K0 407 151 AC	c:15.4	22	63587	ball joint right	1K0 407 366 C	c:15.4

Copyright 2021

VOLKSWAGEN
CADDY

CADDY III (2K_,2C_) 02/2004 - 05/2015

-> CHAS 2K-B-005 000
06/2009 - 06/2010

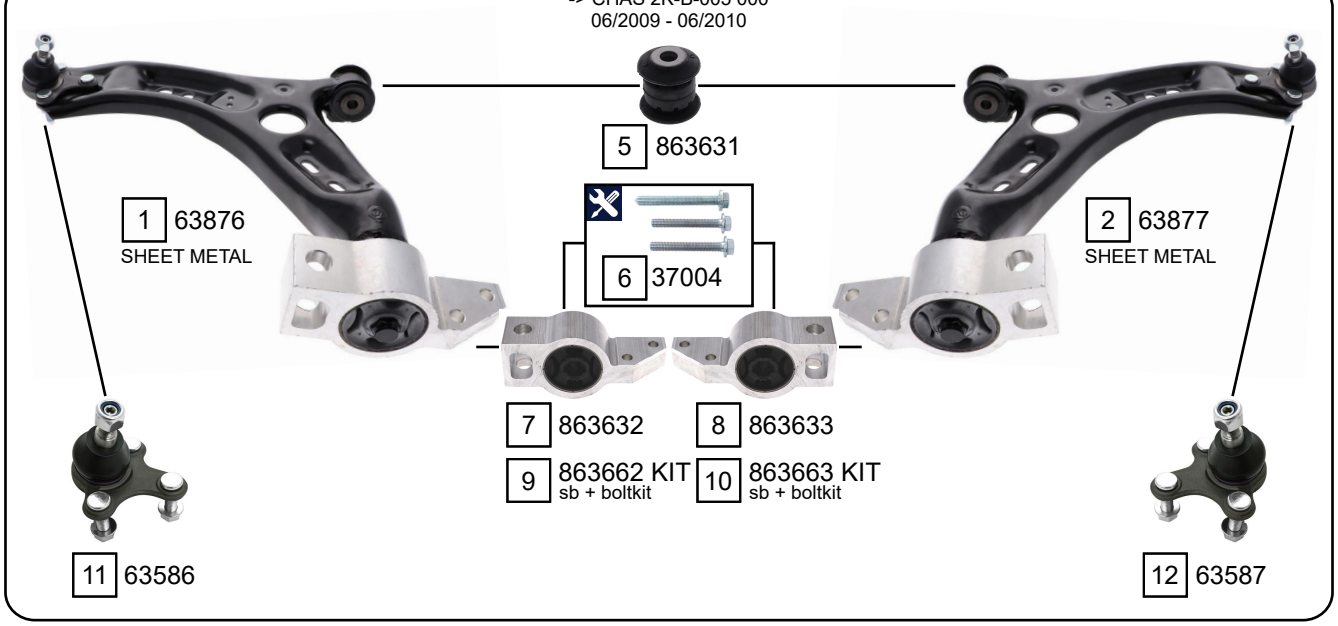

CHAS 2K-B-200 001 ->
06/2010 ->

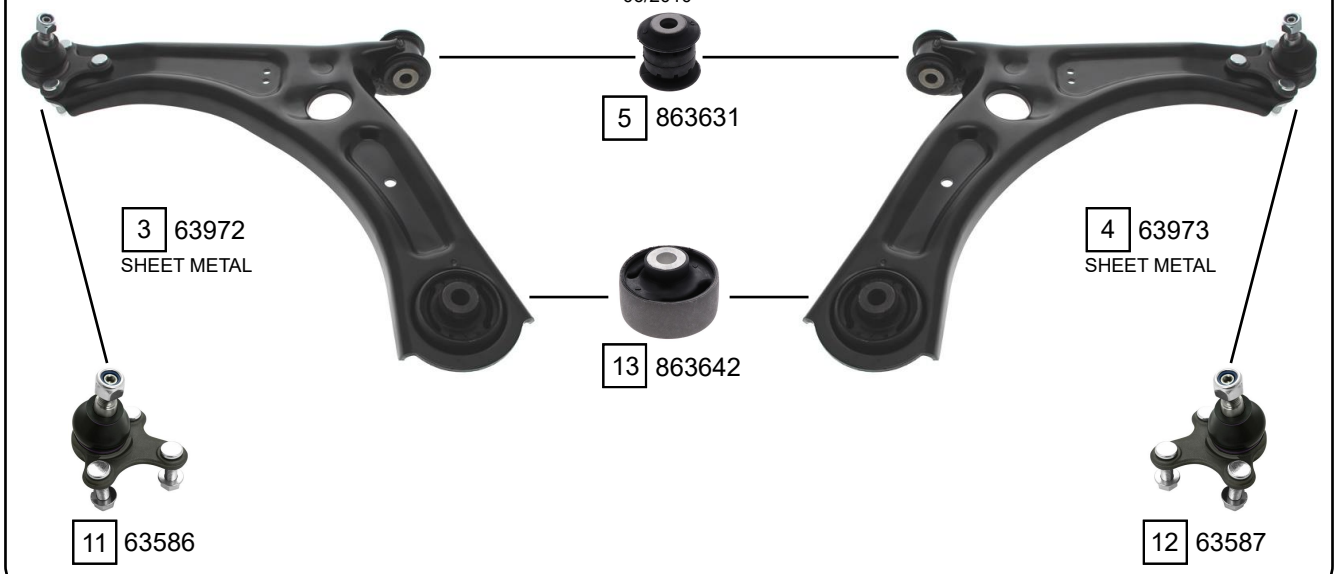

Ref.	Sidem Ref.	Description	OE-number	Measures	Ref.	Sidem Ref.	Description	OE-number	Measures
1	63876	TCA left wbj	1K0 407 151 BC S1	c:15.4	8	863633	silentblock for TCA	1K0 199 232 J	di:18.8 (*)
2	63877	TCA right wbj	1K0 407 152 BC S2	c:15.4	9	863662 KIT	silentblock kit	1K0 199 231 J S1	
3	63972	TCA left wbj	1K0 407 151 BG	c:15.4	10	863663 KIT	silentblock kit	1K0 199 232 J S1	
4	63973	TCA right wbj	1K0 407 152 BG	c:15.4	11	63586	ball joint left	1K0 407 365 C	c:15.4
5	863631	silentblock for TCA	1K0 407 182	di:12.1 do:40 (*)	12	63587	ball joint right	1K0 407 366 C	c:15.4
6	37004	mounting kit	N 910 398 02 S1	th:M10x1.5R	13	863642	silentblock for TCA	1K0 407 183 M	di:13.4 do:65 (*)
7	863632	silentblock for TCA	1K0 199 231 J	di:18.8 (*)					

Copyright 2021

VOLKSWAGEN
CADDY

CADDY III (2K_,2C_) 02/2004 - 05/2015

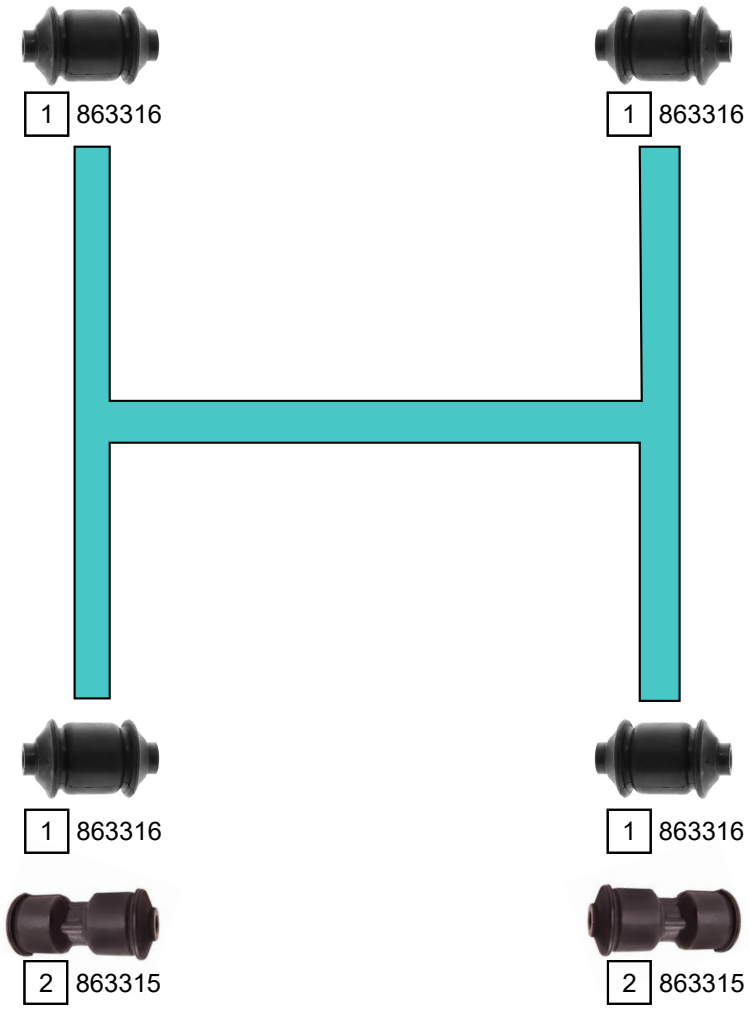

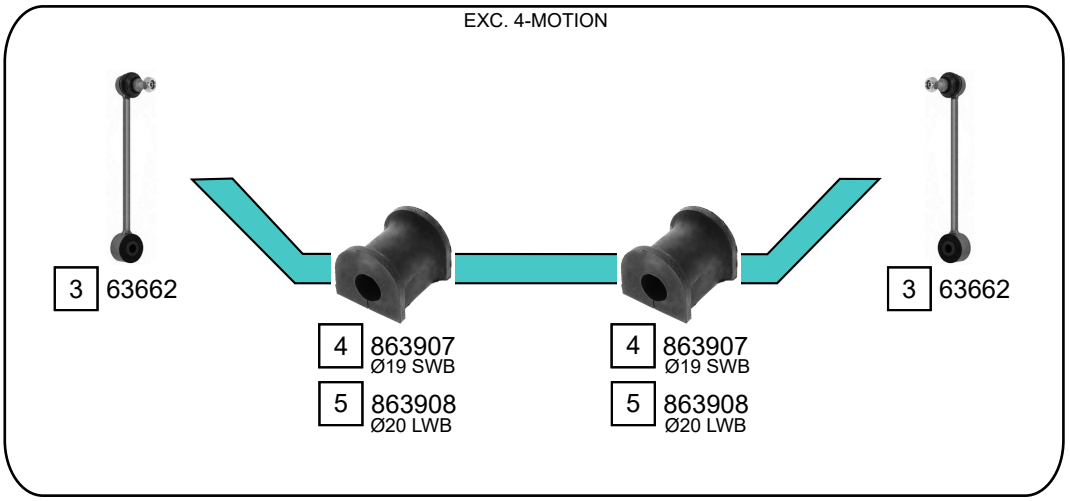

Ref.	Sidem Ref.	Description	OE-number	Measures	Ref.	Sidem Ref.	Description	OE-number	Measures
1	863316	spring bush	6K9 501 541	di:12 do:45	4	863907	stabiliser mounting	2K0 511 413 D	di:18.5
2	863315	spring bush	2K0 511 171 B	di:12.2 do:42.5	5	863908	stabiliser mounting	2K3 511 413	di:20.5
3	63662	stabiliser link rear axle	2K0 505 465 E	L:241					

Copyright 2021

VOLKSWAGEN
CADDY

CADDY IV (SA_) 05/2015 ->

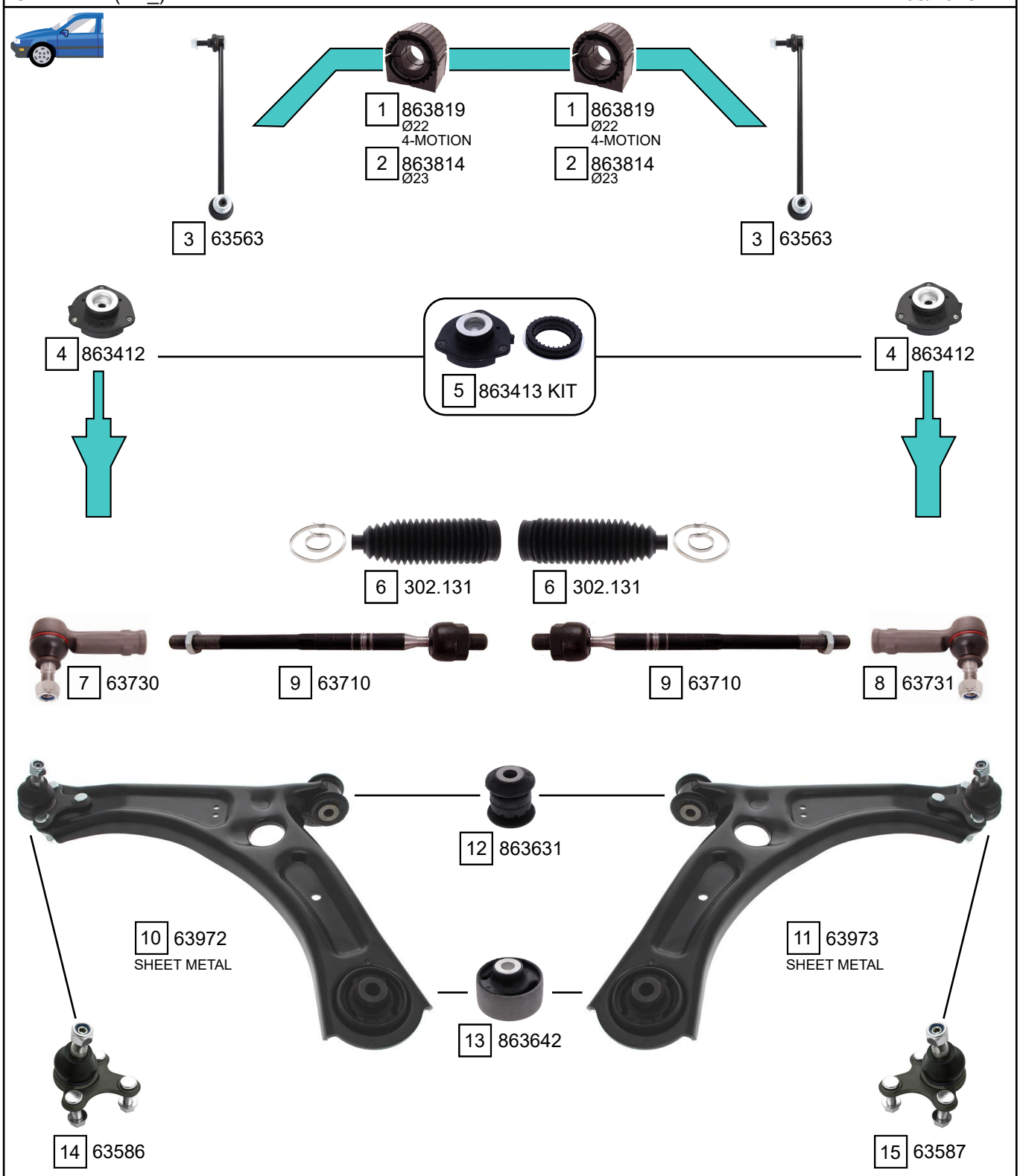

Ref.	Sidem Ref.	Description	OE-number	Measures	Ref.	Sidem Ref.	Description	OE-number	Measures
1	863819	stabiliser mounting	Part of	di:20	9	63710	axial joint	1K0 423 810 A	th:MM16X1.5R L:312
2	863814	stabiliser mounting	Part of	di:21	10	63972	TCA left wbj	1K0 407 151 BG	c:15.4
3	63563	stabiliser link	5Q0 411 315 A	L:335	11	63973	TCA right wbj	1K0 407 152 BG	c:15.4
4	863412	strut mount	1K0 412 331 B	di:14.2 L:49.5	12	863631	silentblock for TCA	1K0 407 182	di:12.1 do:40 (*)
5	863413 KIT	strut mount kit	1K0 412 331 B S1	di:14.2 L:50	13	863642	silentblock for TCA	1K0 407 183 M	di:13.4 do:65 (*)
6	302.131	steering rack gaiter	1K0 423 831 A	D:50 d:15 L:193	14	63586	ball joint left	1K0 407 365 C	c:15.4
7	63730	tie rod end left	1K0 423 811 J S1	c:13.2 th:FM16x1.5R	15	63587	ball joint right	1K0 407 366 C	c:15.4
8	63731	tie rod end right	1K0 423 812 J S1	c:13.2 th:FM16x1.5R					

Copyright 2021

CADDY IV (SA_) 05/2015 ->

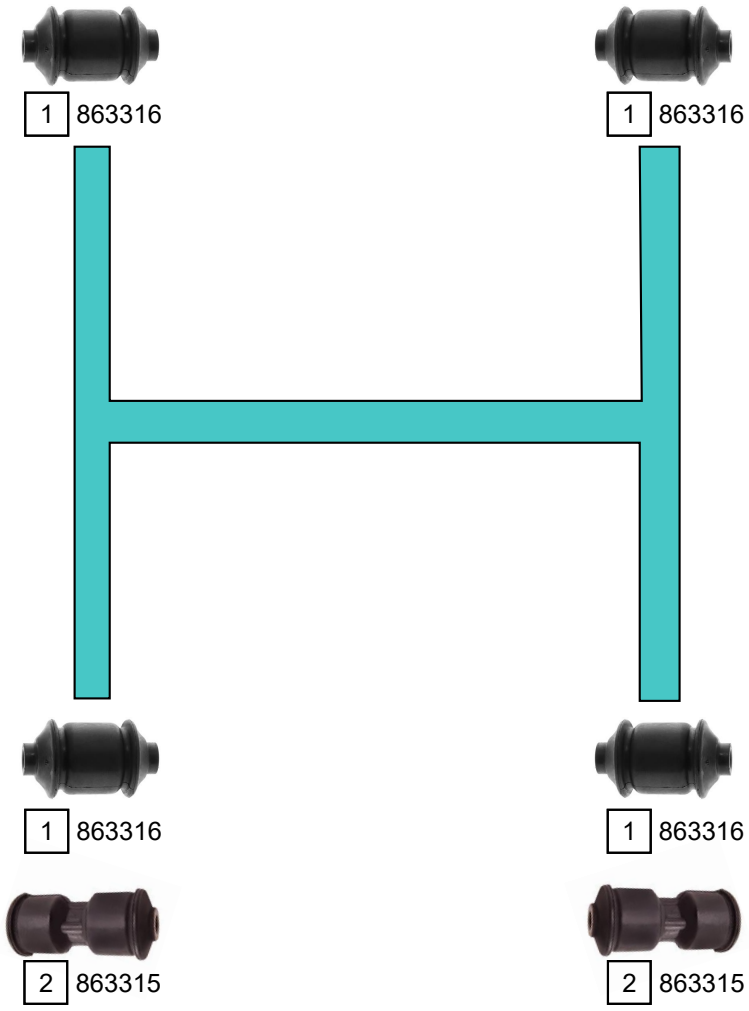

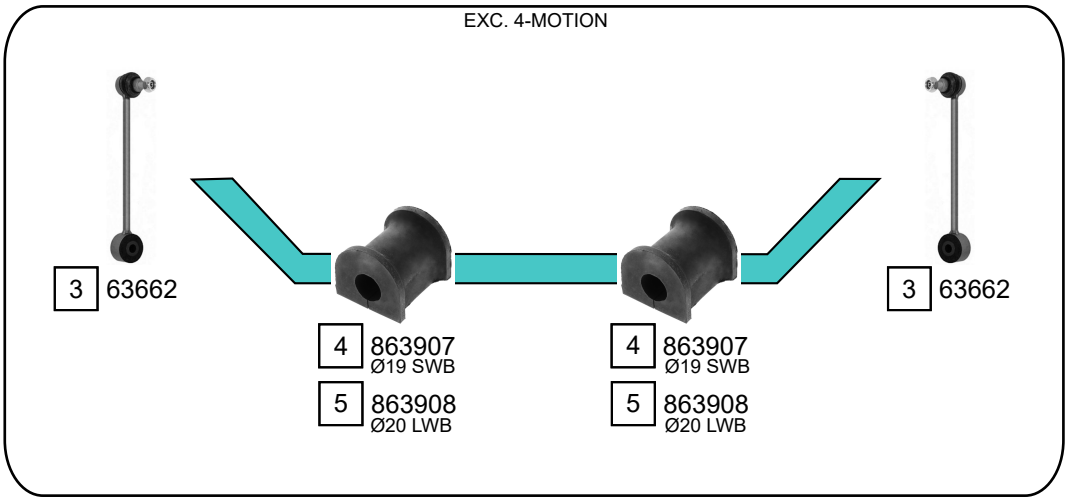

Ref.	Sidem Ref.	Description	OE-number	Measures	Ref.	Sidem Ref.	Description	OE-number	Measures
1	863316	spring bush	6K9 501 541	di:12 do:45	4	863907	stabiliser mounting	2K0 511 413 D	di:18.5
2	863315	spring bush	2K0 511 171 B	di:12.2 do:42.5	5	863908	stabiliser mounting	2K3 511 413	di:20.5
3	63662	stabiliser link rear axle	2K0 505 465 E	L:241					

Copyright 2021

VOLKSWAGEN
CORRADO

CORRADO (53I) 08/1989 - 12/1995

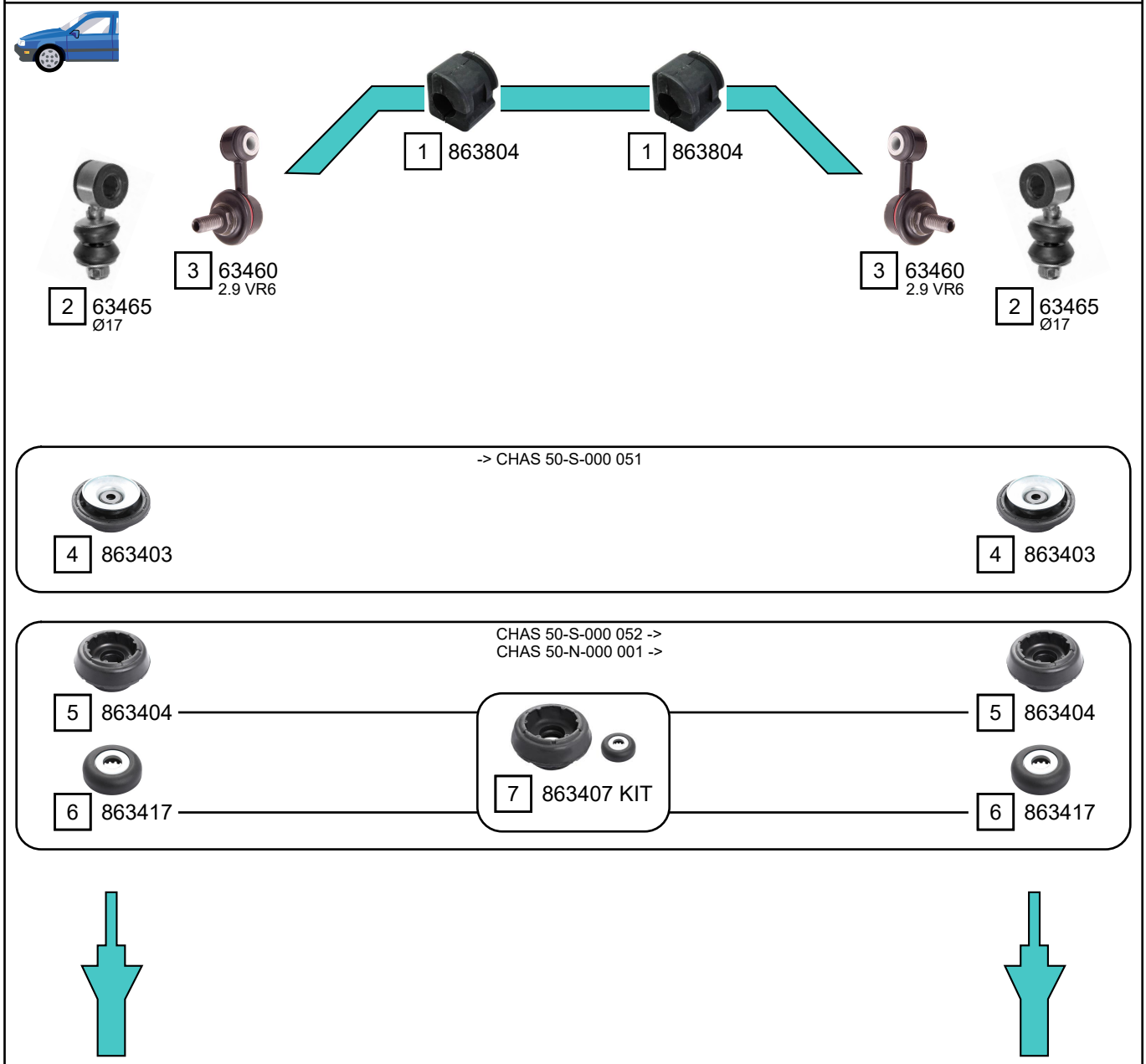

Ref.	Sidem Ref.	Description	OE-number	Measures	Ref.	Sidem Ref.	Description	OE-number	Measures
1	863804	stabiliser mounting	191 411 314	di:17	5	863404	strut mount	7M0 412 331	di:26.5 do:96.7 L:50
2	63465	stabiliser link	6K0 411 315	L:78	6	863417	bearing	1J0 412 249	di:14.3 do:45.3 L:13.4
3	63460	stabiliser link	535 411 315	L:51	7	863407 KIT	strut mount kit	7M0 412 331 S1	di:14.3 do:98 L:50
4	863403	strut mount	357 412 329	di:14 do:127 L:55					

Copyright 2021

VOLKSWAGEN
CORRADO

CORRADO (53I) 08/1989 - 12/1995

PS TRW EXC. 2.9 VR6

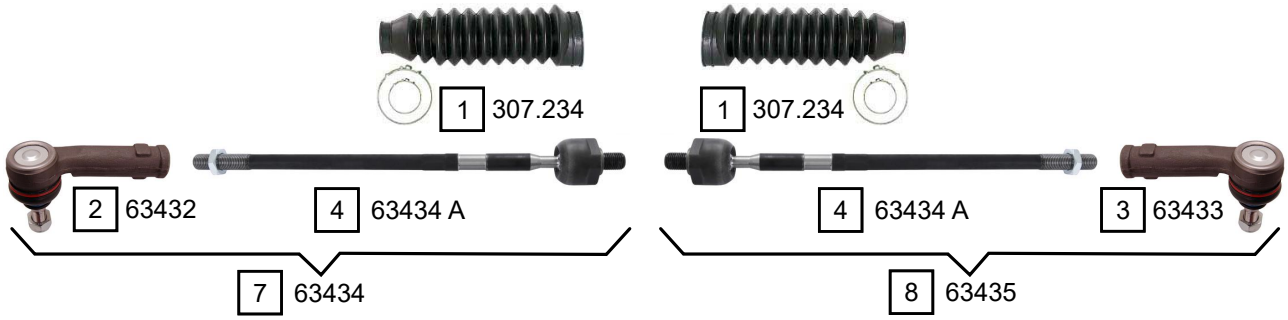

PS TRW 2.9 VR6

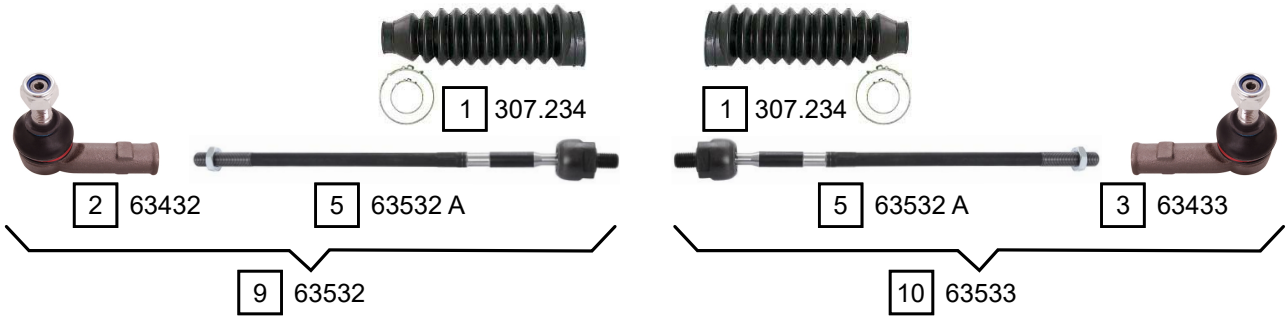

PS ZF 2.9 VR6

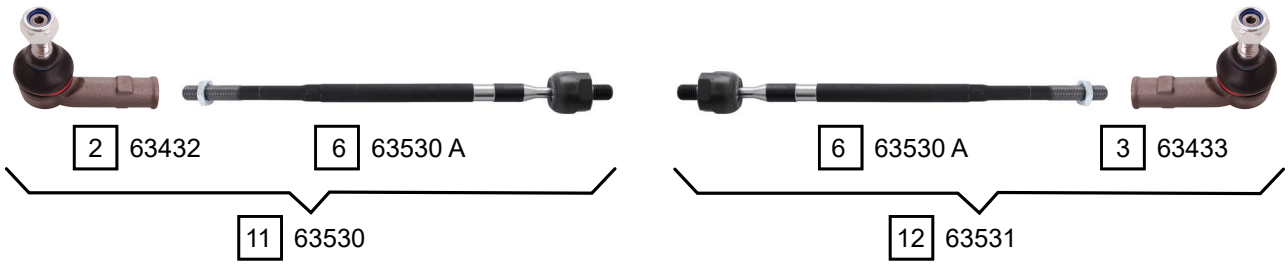

Ref.	Sidem Ref.	Description	OE-number	Measures	Ref.	Sidem Ref.	Description	OE-number	Measures
1	307.234	steering rack gaiter	1H0 422 831 B	D:41 d:10 L:210	7	63434	tie rod left	191 422 803 A	c:12.6
2	63432	tie rod end left	6N0 419 811	c:12.6 th:FM14x1.5R	8	63435	tie rod right	191 422 804 A	c:12.6
3	63433	tie rod end right	6N0 422 812	c:12.6 th:FM14x1.5R	9	63532	tie rod left	1H0 422 803 D	c:12.6
4	63434 A	axial joint	Part of	th:MM14X1.5R L:341	10	63533	tie rod right	1H0 422 804 D	c:12.6
5	63532 A	axial joint	Part of	th:MM14X1.5R L:371	11	63530	tie rod left	1H0 422 803 B	c:12.6
6	63530 A	axial joint	Part of	th:MM14X1.5R L:360	12	63531	tie rod right	1H0 422 804 B	c:12.6

Copyright 2021

VOLKSWAGEN
CORRADO

CORRADO (53I) 08/1989 - 12/1995

EXC. 2.9 VR6

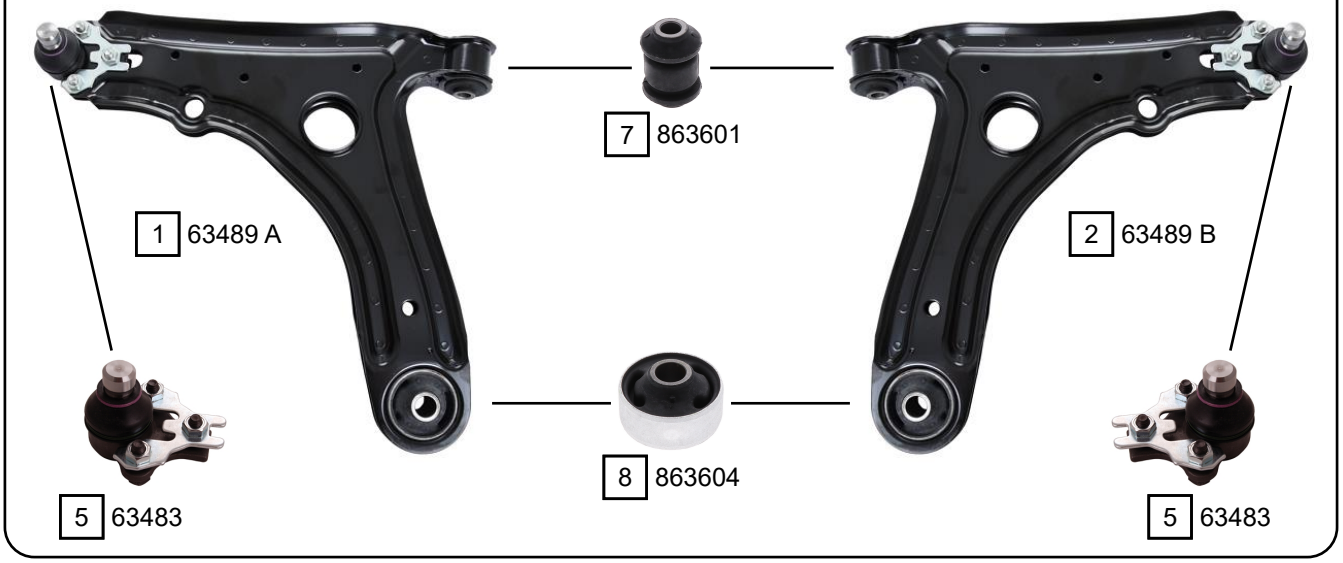

2.9 VR6

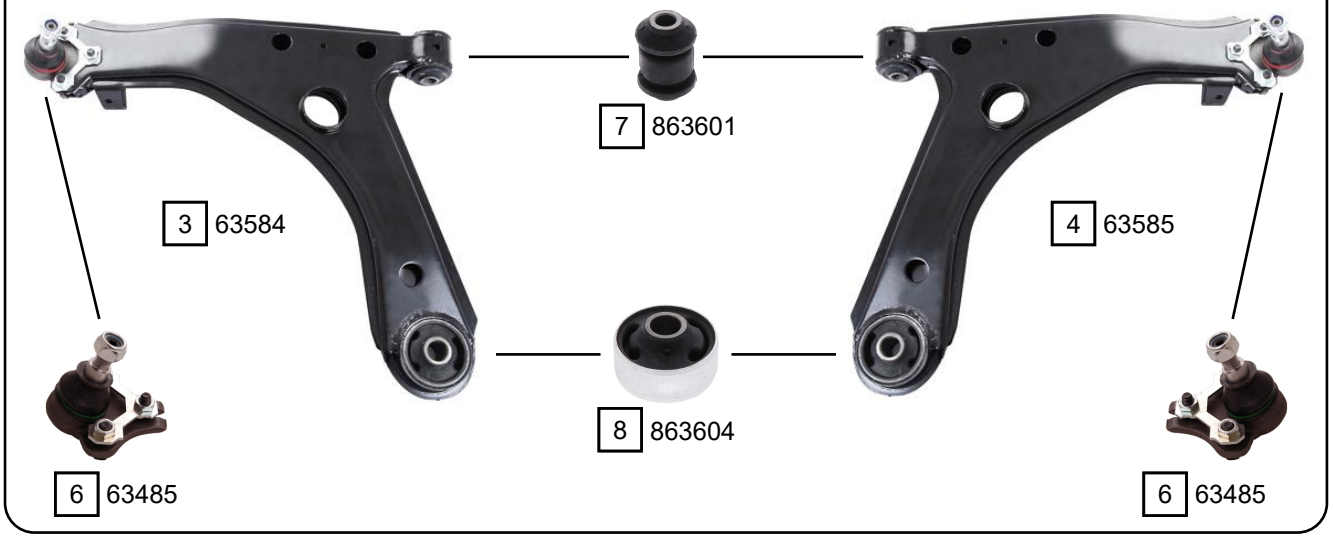

Ref.	Sidem Ref.	Description	OE-number	Measures	Ref.	Sidem Ref.	Description	OE-number	Measures
1	63489 A	TCA left wbj	191 407 151 B S1	c:19	5	63483	ball joint lower	357 407 365 A	c:19
2	63489 B	TCA right wbj	191 407 151 B S2	c:19	6	63485	ball joint lower	1H0 407 365	c:16.5
3	63584	TCA left wbj	1H0 407 151 A S1	c:16.5	7	863601	silentblock for TCA	357 407 182	di:12 do:32.6 (*)
4	63585	TCA right wbj	1H0 407 152 S1	c:16.5	8	863604	silentblock for TCA	191 407 181 D	di:17 do:60.1 (*)

Copyright 2021

VOLKSWAGEN
CORRADO

CORRADO (53I) 08/1989 - 12/1995

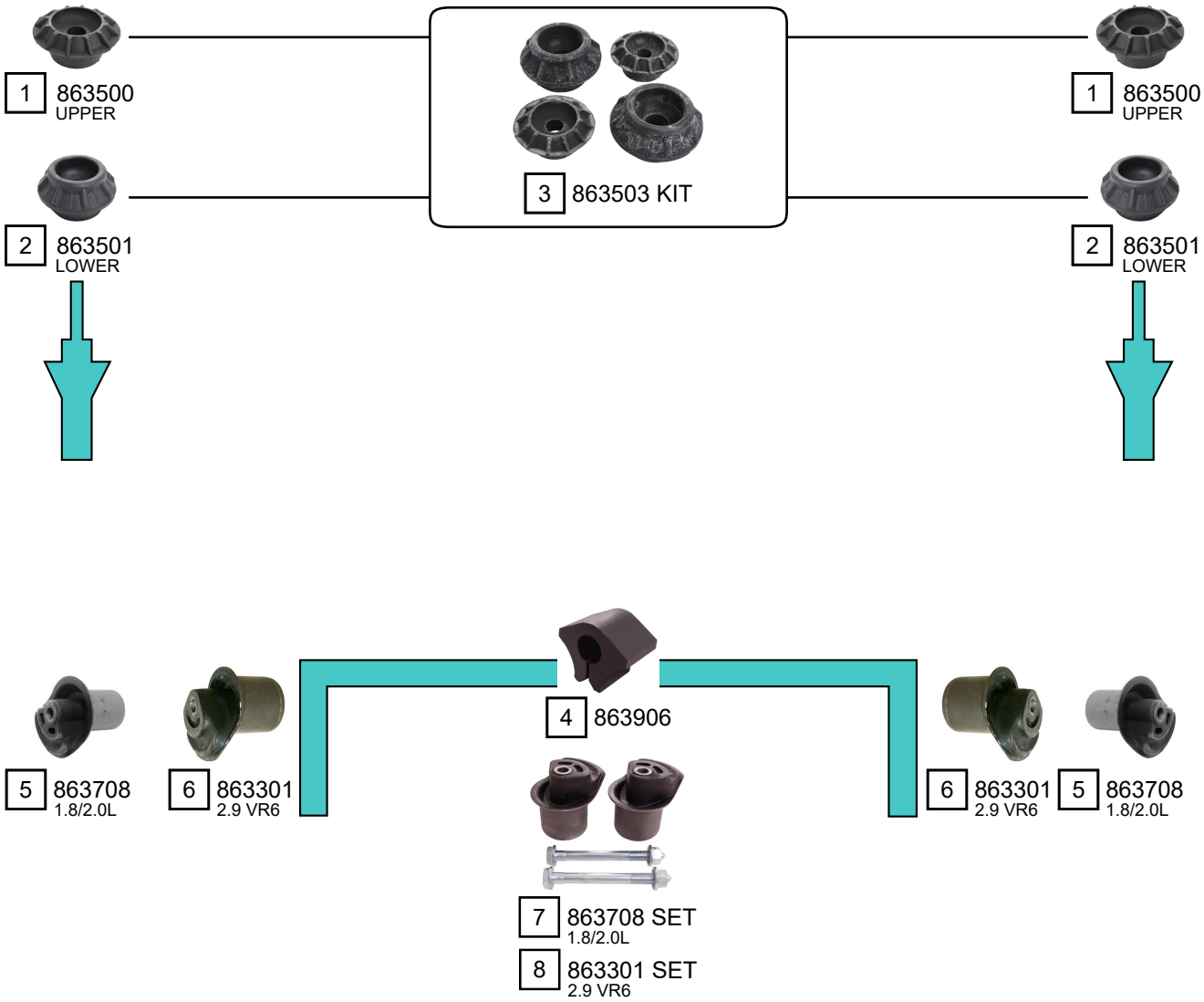

Ref.	Sidem Ref.	Description	OE-number	Measures	Ref.	Sidem Ref.	Description	OE-number	Measures
1	863500	strut mount	191 512 335	di:13.5 do:59 L:27.5	5	863708	mounting axle body	191 501 541	di:12.2 do:44.4
2	863501	strut mount	191 512 333	di:17.5 do:70 L:40	6	863301	mounting axle body	1H0 501 541 A	di:12 do:56
3	863503 KIT	strut mount kit	191 512 335 S1	di:13.5	7	863708 SET	mounting axle body set	191 501 541 S1	di:12.2 do:44.4
4	863906	stabiliser mounting	871 511 423	di:16.5	8	863301 SET	mounting axle body set	1H0 501 541 A S1	di:12 do:56

Copyright 2021

VOLKSWAGEN
CRAFTER

CRAFTER (2E, 2F) 04/2006 - 12/2016

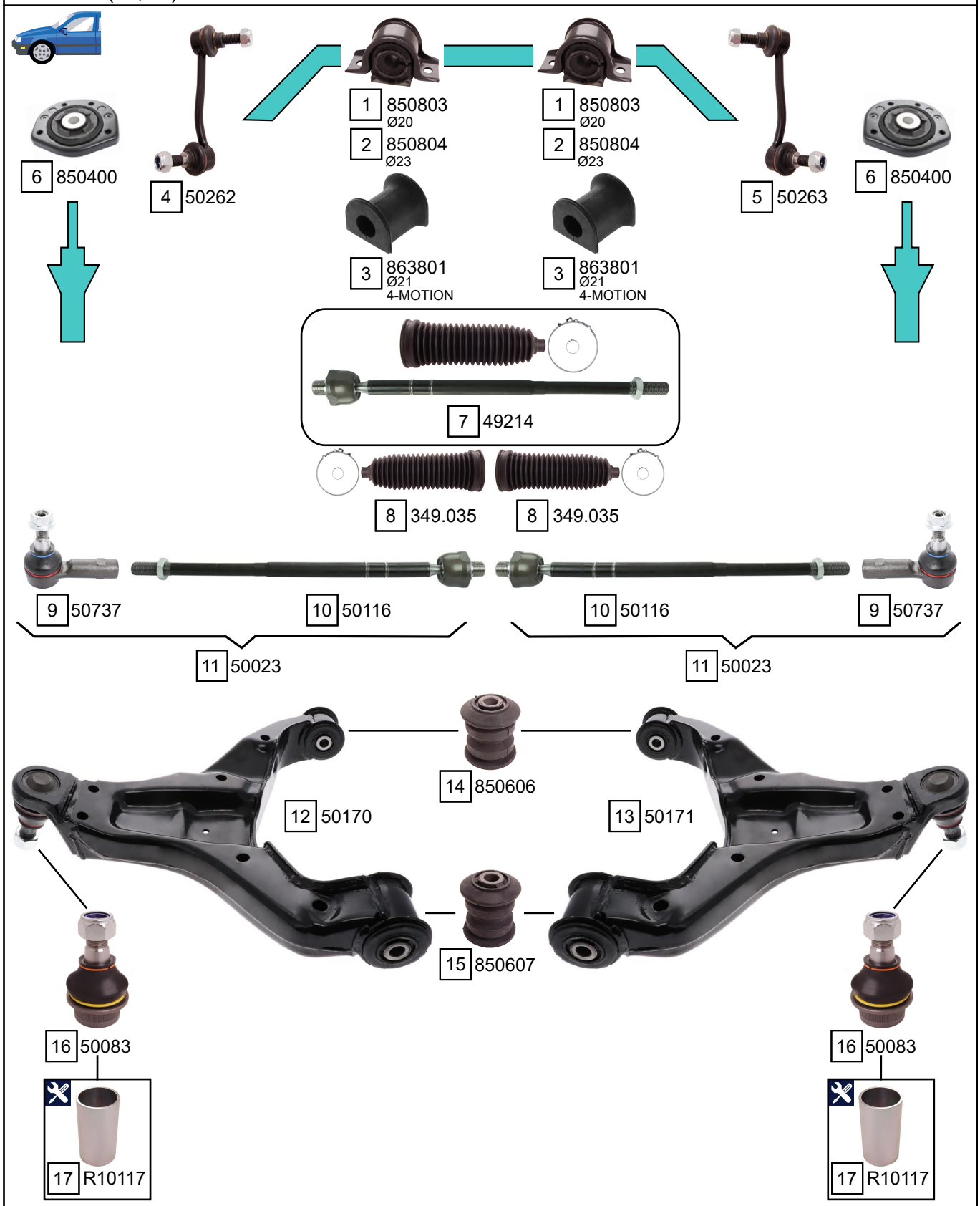

Ref.	Sidem Ref.	Description	OE-number	Measures	Ref.	Sidem Ref.	Description	OE-number	Measures
1	850803	stabiliser mounting	2E0 411 041 E S1	di:16.5	10	50116	axial joint	Part of	th:MM18X1.5R L:400
2	850804	stabiliser mounting	2E0 411 041 F S1	di:21	11	50023	tie rod	2E0 498 104 A S1	c:16.8
3	863801	stabiliser mounting	7H0 411 313	di:21	12	50170	TCA left wbj	2E0 407 151 M	c:21.9
4	50262	stabiliser link left	2E0 411 317 C	L:138	13	50171	TCA right wbj	2E0 407 152 M	c:21.9
5	50263	stabiliser link right	2E0 411 318 C	L:138	14	850606	silentblock for TCA	2E0 407 523	di:14.2 (*)
6	850400	strut mount	2E0 407 181 C	di:16.4 L:46	15	850607	silentblock for TCA	2E0 407 253 A	di:14.2 (*)
7	49214	axial joint kit	2E0 713 491	D:67 th:MM16X1.5R	16	50083	ball joint	Part of	c:21.9 do:45.3
8	349.035	steering rack gaiter	2E0 713 115	D:67 d:16 L:218	17	R10117	mounting tool ring long ø64	SEE PAGE III	di:56 do:64
9	50737	tie rod end	2E0 498 104 A	c:16.8 th:FM16X1.5R					

Copyright 2021

VOLKSWAGEN
CRAFTER

CRAFTER (2E, 2F) 04/2006 - 12/2016

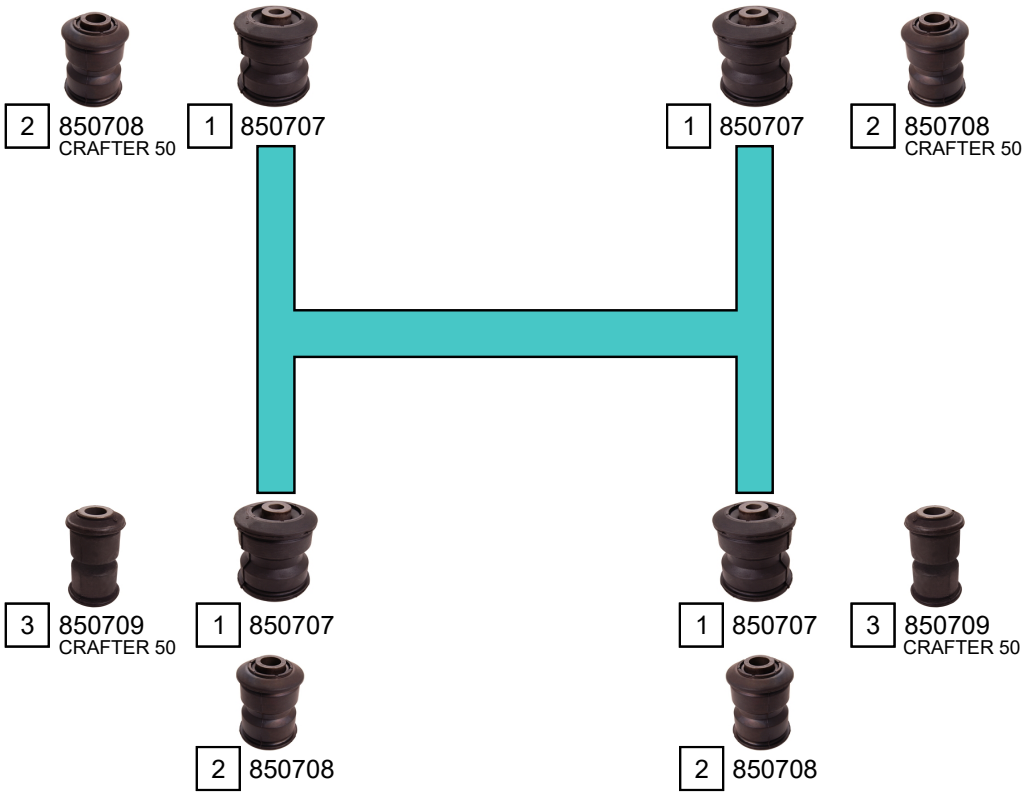

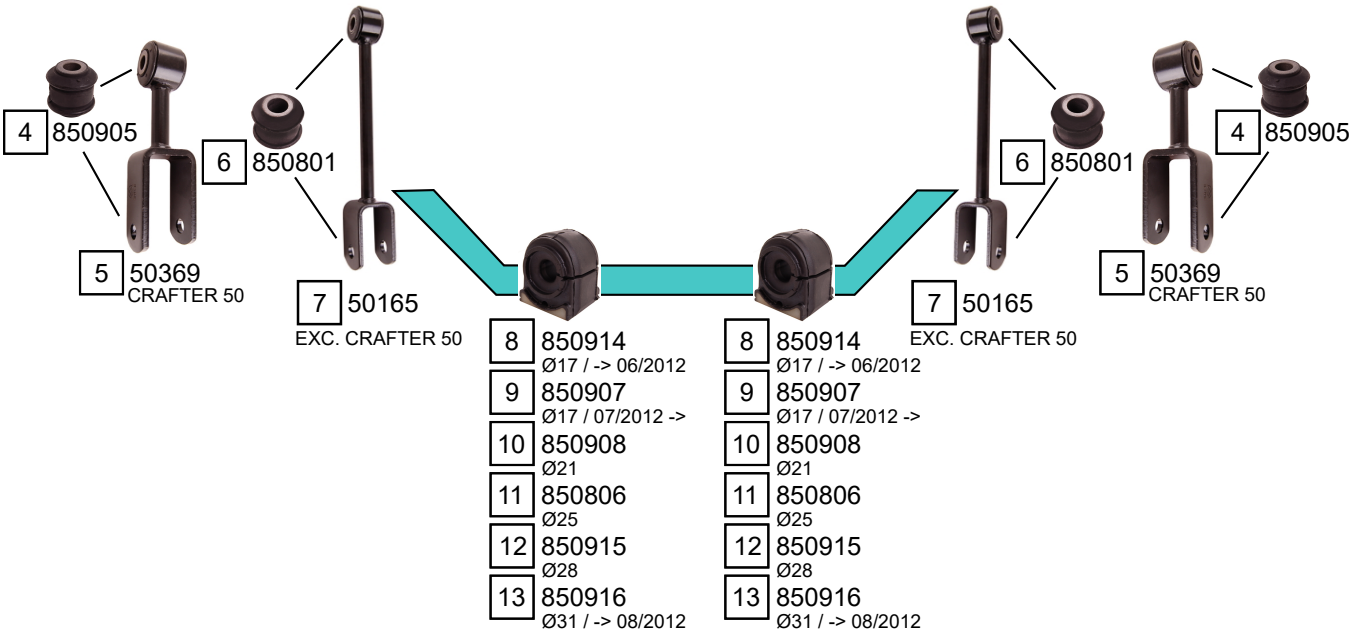

Ref.	Sidem Ref.	Description	OE-number	Measures	Ref.	Sidem Ref.	Description	OE-number	Measures
1	850707	spring bush	2E0 511 415	di:12.1 do:63	8	850914	stabiliser mounting	2E0 511 413 G	di:15.5
2	850708	spring bush	611 324 03 50	di:16.1 do:50	9	850907	stabiliser mounting	2E0 511 413 M	di:11.5
3	850709	spring bush	2E0 411 346	di:16.1 do:39	10	850908	stabiliser mounting	2E0 511 413 N	di:18
4	850905	stabiliser mounting	2E0 511 031	di:12.1	11	850806	stabiliser mounting	2E0 511 413 D	di:24
5	50369	stabiliser link	2E0 511 051 G	L:140	12	850915	stabiliser mounting	2D0 511 413 B	di:27
6	850801	stabiliser mounting	2D0 511 413	di:12	13	850916	stabiliser mounting	2D0 511 413 C	di:30
7	50165	stabiliser link rear axle	2E0 511 051 F	L:213					

Copyright 2021

VOLKSWAGEN
CRAFTER

CRAFTER (SY_,SZ_) 09/2016 ->

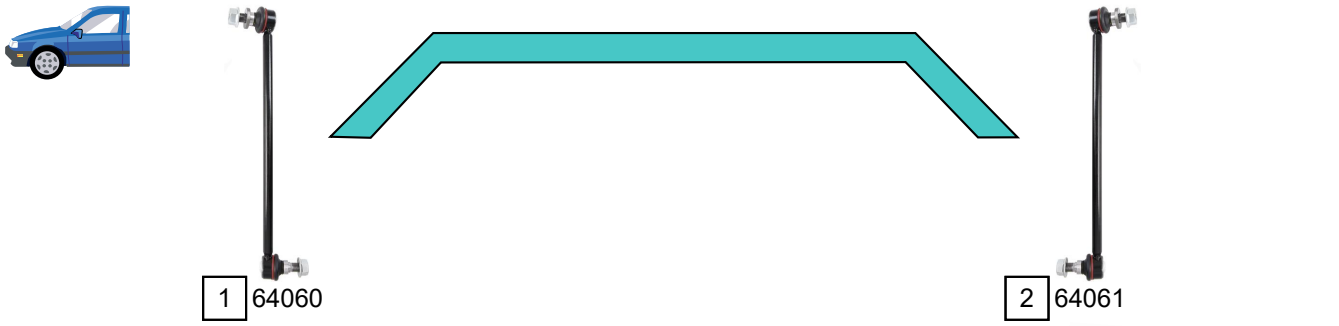

STANDARD FRONT AXLE

HEAVY DUTY FRONT AXLE + RWD

Ref.	Sidem Ref.	Description	OE-number	Measures	Ref.	Sidem Ref.	Description	OE-number	Measures
1	64060	stabiliser link left	2N0 411 317 C	L:380	8	64086	ball joint	2N0 407 361 A	c:21.2
2	64061	stabiliser link right	2N0 411 318 A	L:380	9	864612	silentblock for TCA	2N0 407 183 A	di:16.2 do:50.1 (*)
3	64238	tie rod end left	2N0 423 811	c:16.2 th:FM18X1.5R	10	864613	silentblock for TCA	2N0 407 182 C	di:16.2 do:70 (*)
4	64239	tie rod end right	2N0 423 812	c:15.5 th:FM18X1.5R	11	864614	silentblock for TCA	2N0 407 182 B	di:16.2 do:70 (*)
5	64011	axial joint	2N0 423 810	th:MM18X1.5R L:224	12	64078	TCA left wobj	2N0 407 151 H	
6	64076	TCA left wobj	2N0 407 151 J		13	64079	TCA right wobj	2N0 407 152 H	
7	64077	TCA right wobj	2N0 407 152 J						

Copyright 2021

CRAFTER (SY_,SZ_) 09/2016 ->

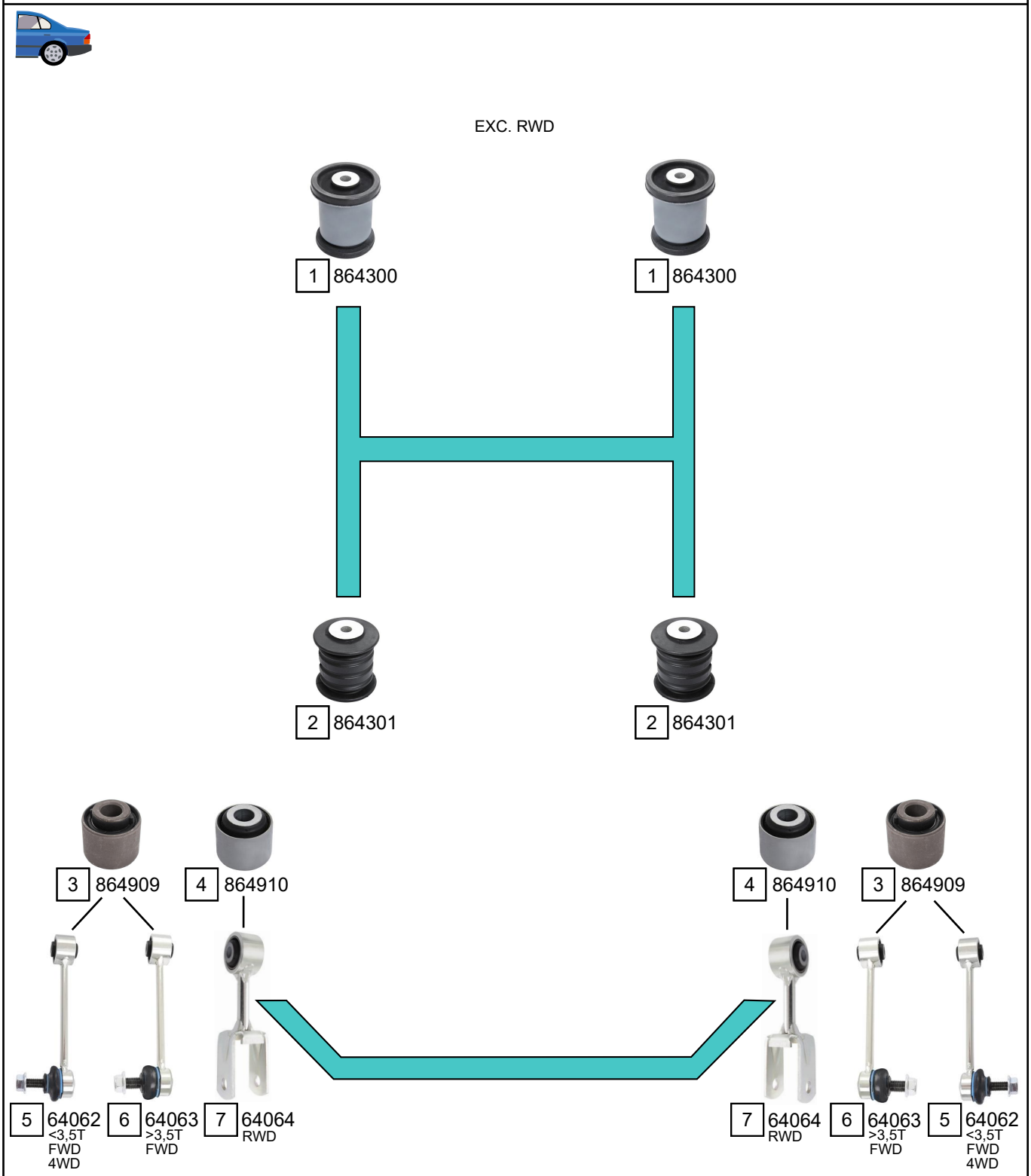

Ref.	Sidem Ref.	Description	OE-number	Measures	Ref.	Sidem Ref.	Description	OE-number	Measures
1	864300	spring bush	2N0 511 413	di:12.1 do:60.9	5	64062	stabiliser link	2N0 505 465	L:180
2	864301	spring bush	2N0 511 414	di:12.2 do:61.5	6	64063	stabiliser link	2N0 505 465 B	L:180
3	864909	stabiliser mounting	Part of	di:12.2	7	64064	stabiliser link	2N0 505 465 A	L:140
4	864910	stabiliser mounting	Part of	di:12.2					

Copyright 2021

VOLKSWAGEN
DERBY

DERBY (86, 86C, 80) 02/1977 - 12/1984

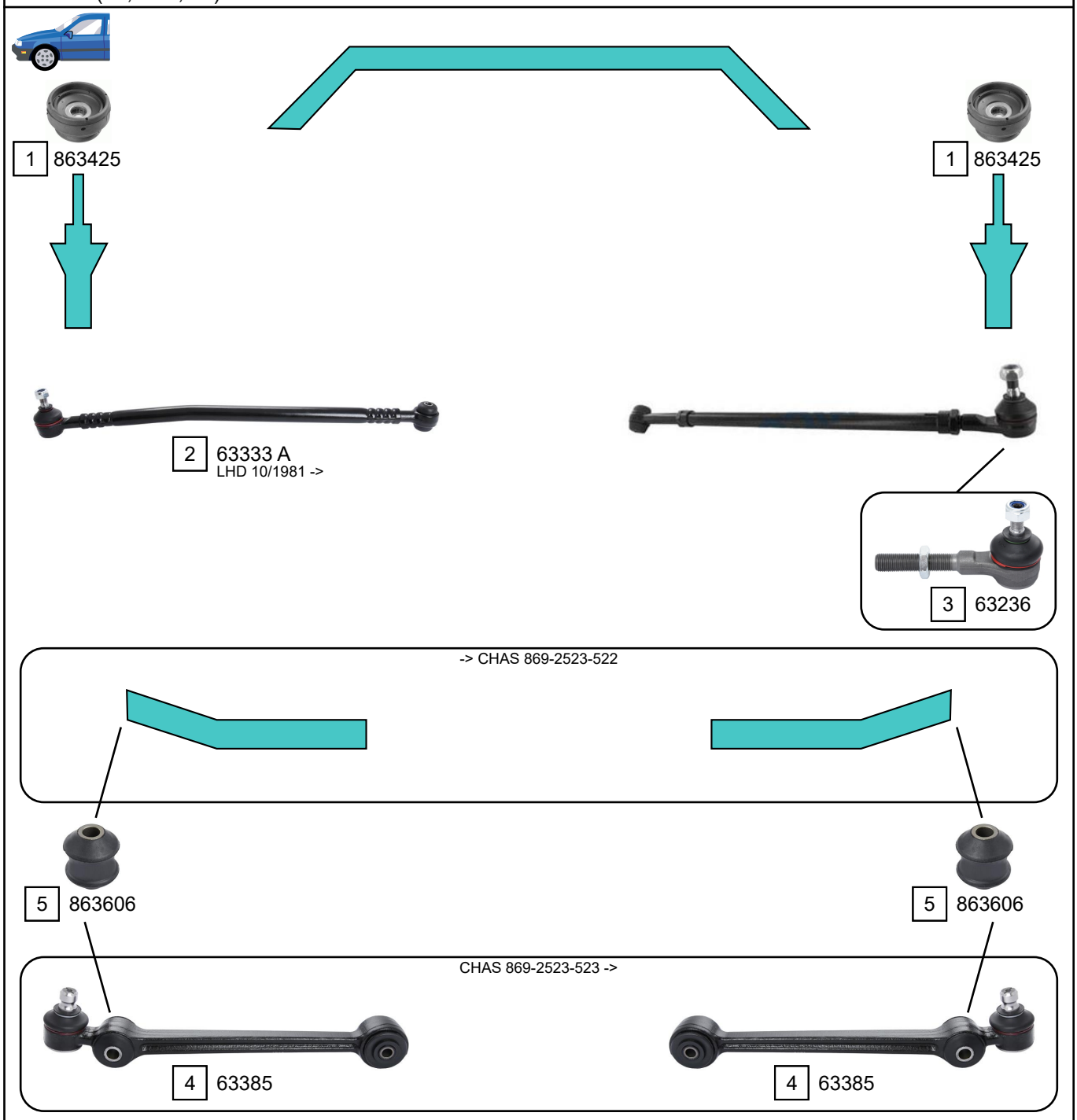

Ref.	Sidem Ref.	Description	OE-number	Measures	Ref.	Sidem Ref.	Description	OE-number	Measures
1	863425	strut mount	871 412 323 A	di:12.5 do:76.5 L:42.8	4	63385	TCA wbj	861 407 151 B	c:17
2	63333 A	tie rod left	871 419 801 A	c:10.8 L:511	5	863606	silentblock for TCA	861 407 183	di:12.2 do:33.5 (*)
3	63236	tie rod end	811 419 812	c:10.8 th:MM14X1.5R					

Copyright 2021

VOLKSWAGEN
EOS

EOS (1F7, 1F8) 03/2006 - 08/2015

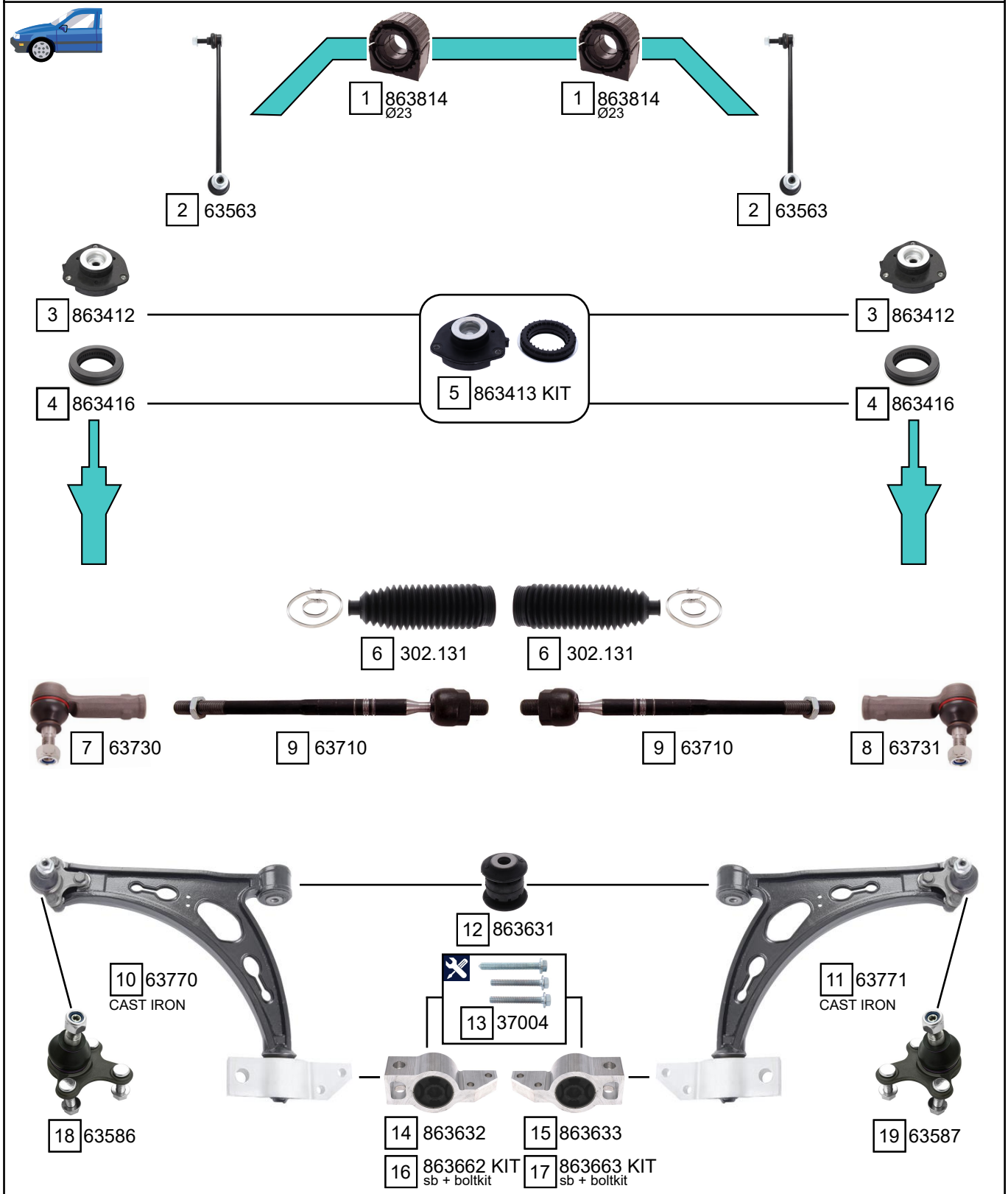

Ref.	Sidem Ref.	Description	OE-number	Measures	Ref.	Sidem Ref.	Description	OE-number	Measures
1	863814	stabiliser mounting	Part of	di:21	11	63771	TCA right wbj	1K0 407 152 AC	c:15.4
2	63563	stabiliser link	5Q0 411 315 A	L:335	12	863631	silentblock for TCA	1K0 407 182	di:12.1 do:40 (*)
3	863412	strut mount	1K0 412 331 B	di:14.2 L:49.5	13	37004	mounting kit	N 910 398 02 S1	th:M10x1.5R
4	863416	bearing	1K0 412 249 B	di:68.5 do:112 L:25.5	14	863632	silentblock for TCA	1K0 199 231 J	di:18.8 (*)
5	863413 KIT	strut mount kit	1K0 412 331 B S1	di:14.2 L:50	15	863633	silentblock for TCA	1K0 199 232 J	di:18.8 (*)
6	302.131	steering rack gaiter	1K0 423 831 A	D:50 d:15 L:193	16	863662 KIT	silentblock kit	1K0 199 231 J S1	
7	63730	tie rod end left	1K0 423 811 J S1	c:13.2 th:FM16x1.5R	17	863663 KIT	silentblock kit	1K0 199 232 J S1	
8	63731	tie rod end right	1K0 423 812 J S1	c:13.2 th:FM16x1.5R	18	63586	ball joint left	1K0 407 365 C	c:15.4
9	63710	axial joint	1K0 423 810 A	th:MM16X1.5R L:312	19	63587	ball joint right	1K0 407 366 C	c:15.4
10	63770	TCA left wbj	1K0 407 151 AC	c:15.4					

Copyright 2021

VOLKSWAGEN
EOS

EOS (1F7, 1F8) 03/2006 - 08/2015

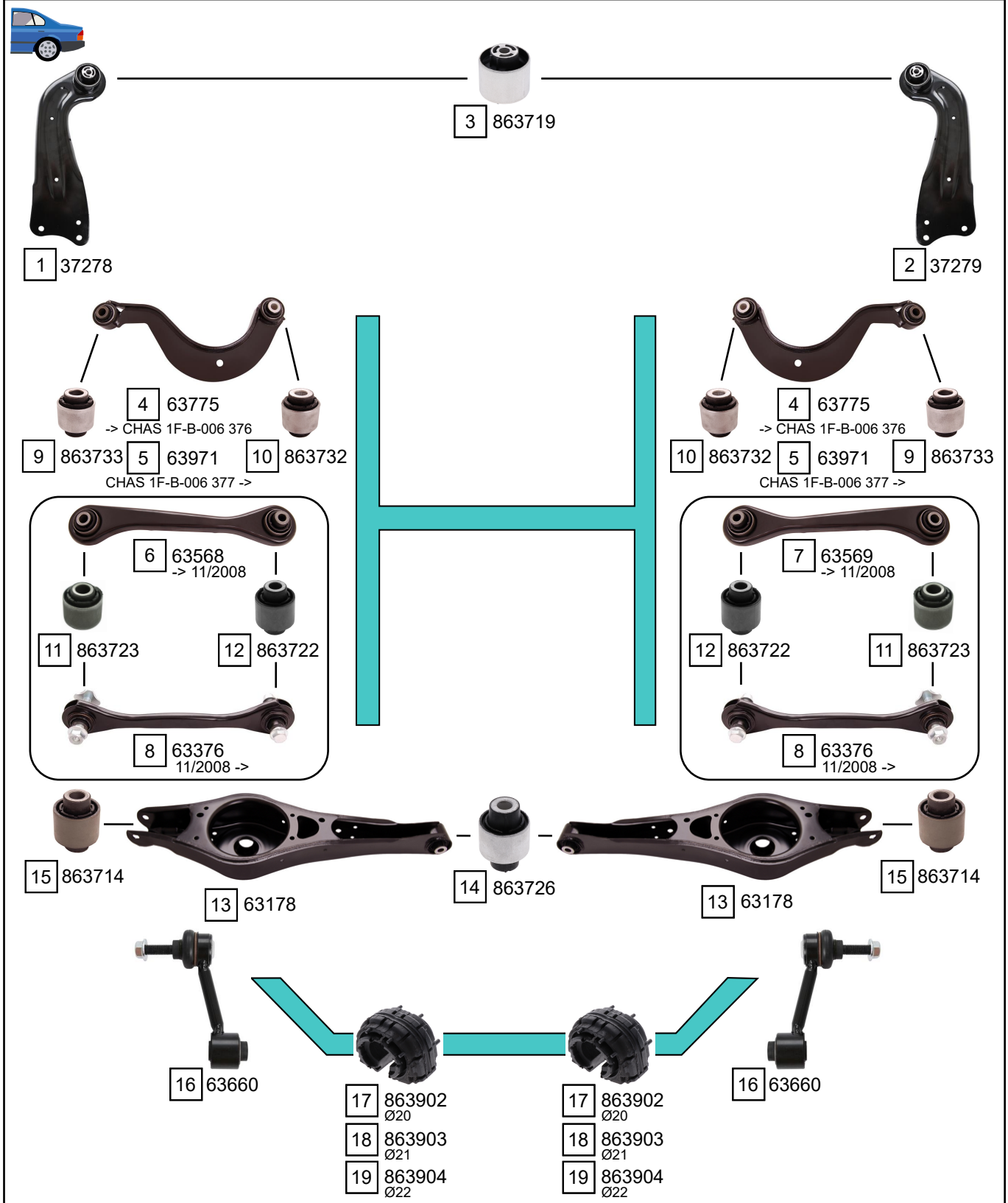

Ref.	Sidem Ref.	Description	OE-number	Measures	Ref.	Sidem Ref.	Description	OE-number	Measures
1	37278	TCA left	1K0 505 223 K	L:373	11	863723	silentblock for TCA	Part of	di:14.2 do:40.1 (*)
2	37279	TCA right	1K0 505 224 K	L:373	12	863722	silentblock for TCA	Part of	di:12.1 do:40.4 (*)
3	863719	mounting axle body	3C0 505 541	di:12.2 do:60.2 (*)	13	63178	TCA	1K0 505 311 AB	
4	63775	track rod	1K0 505 323 N	L:305.5	14	863726	silentblock for TCA	Part of	di:12.1 do:42 (*)
5	63971	track rod	5Q0 505 323 C	L:305	15	863714	silentblock for TCA	1K0 505 553 A	di:12.2 do:37.4 (*)
6	63568	track rod	1K0 501 529 F	L:298	16	63660	stabiliser link rear axle	1K0 505 465 K	L:95
7	63569	track rod	1K0 501 530 C	L:298	17	863902	stabiliser mounting	1K0 511 327 AQ	di:19
8	63376	track rod	1K0 501 529 H	L:298	18	863903	stabiliser mounting	1K0 511 327 AR	di:18.5
9	863733	silentblock for TCA	Part of	di:14.3 do:38.2 (*)	19	863904	stabiliser mounting	1K0 511 327 AS	di:19.5
10	863732	silentblock for TCA	Part of	di:12.1 do:38.3 (*)					

Copyright 2021

VOLKSWAGEN
FOX

FOX (5Z_) 08/2003 - 10/2015

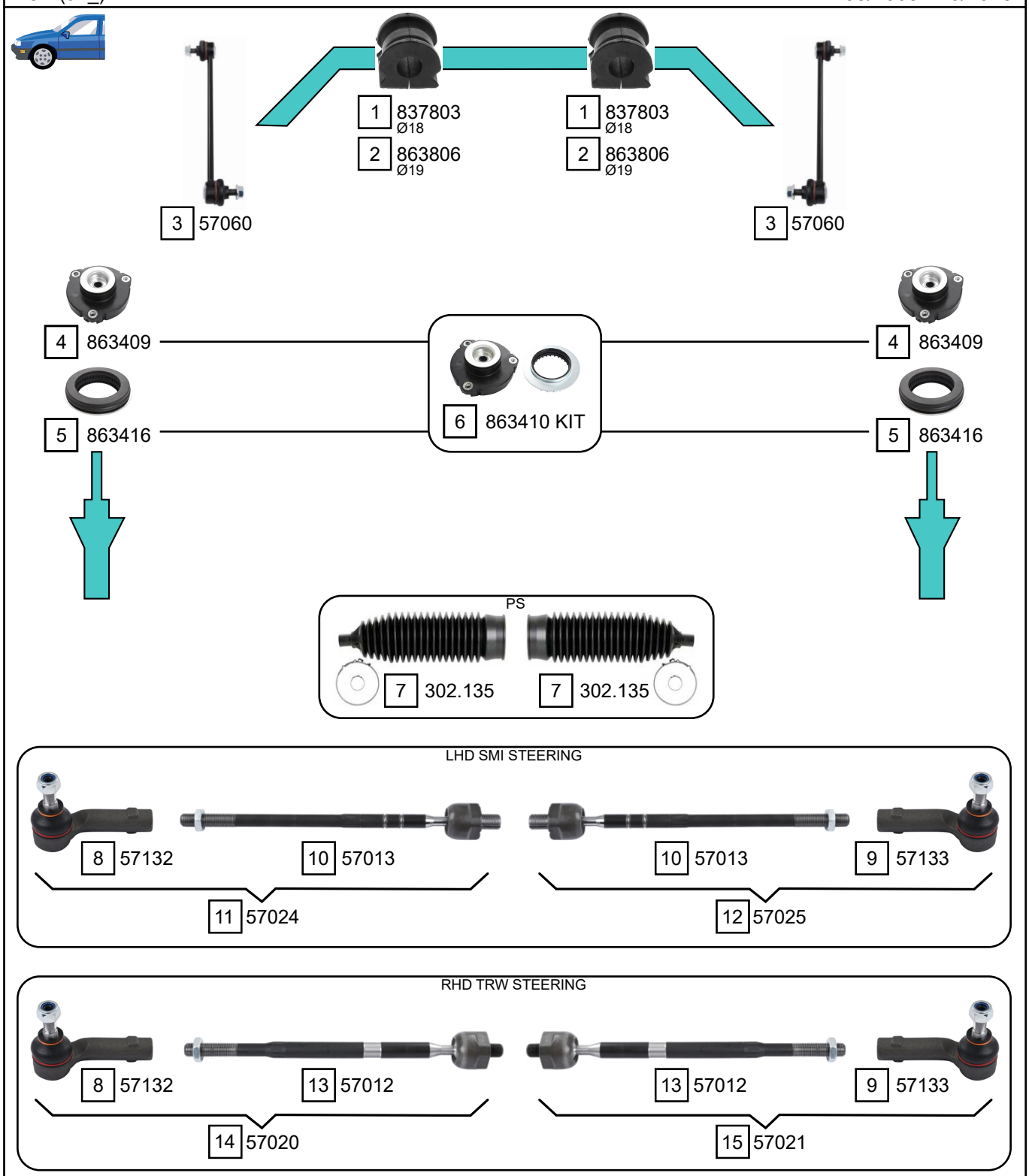

Ref.	Sidem Ref.	Description	OE-number	Measures	Ref.	Sidem Ref.	Description	OE-number	Measures
1	837803	stabiliser mounting	6Q0 411 314 P	di:16	9	57133	tie rod end right	6R0 423 812	c:13.4 th:FM14x1.5R
2	863806	stabiliser mounting	6Q0 411 314 Q	di:17	10	57013	axial joint	6Q0 423 810 C	th:MM16x1.5R L:300
3	57060	stabiliser link	6R0 411 315	L:270	11	57024	tie rod left	6Q0 423 803 G	c:13.4
4	863409	strut mount	6N0 412 331 E	di:14.3 do:66 L:49	12	57025	tie rod right	6Q0 423 804 G	c:13.4
5	863416	bearing	1K0 412 249 B	di:68.5 do:112 L:25.5	13	57012	axial joint	Part of	th:MM14X1.5R L:297
6	863410 KIT	strut mount kit	6N0 412 331 E S2	di:14.3	14	57020	tie rod left	6Q0 423 803 P	c:13.4
7	302.135	steering rack gaiter	6E0 419 831	D:48 d:12 L:200	15	57021	tie rod right	6Q0 423 804 P	c:13.4
8	57132	tie rod end left	6R0 423 811	c:13.4 th:FM14x1.5R					

Copyright 2021

VOLKSWAGEN
FOX

FOX (5Z_) 08/2003 - 10/2015

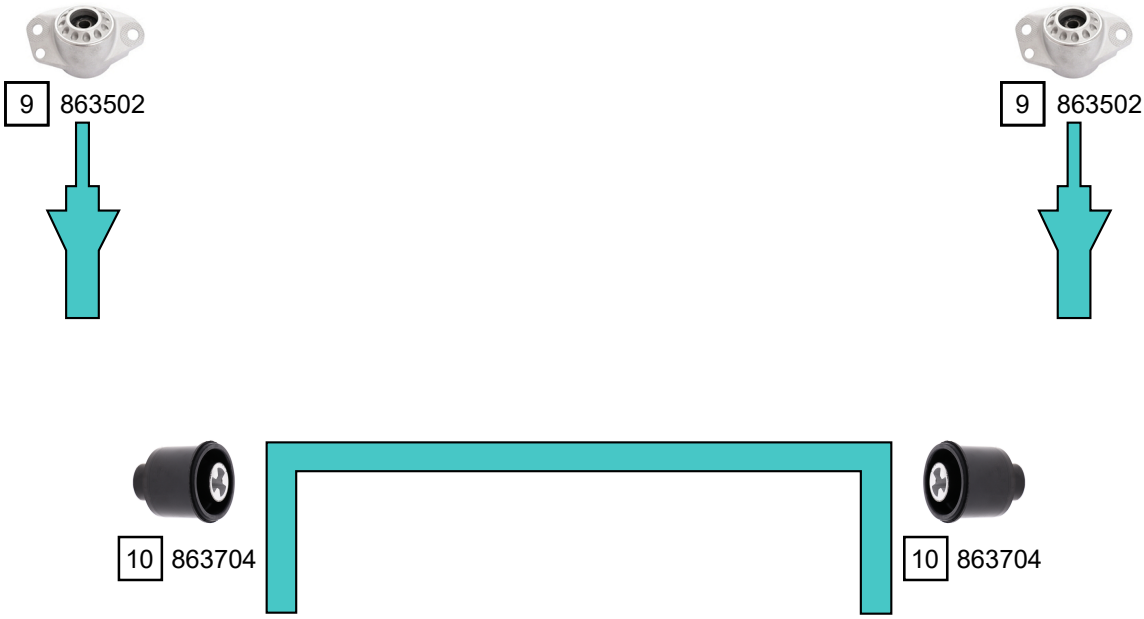

Ref.	Sidem Ref.	Description	OE-number	Measures	Ref.	Sidem Ref.	Description	OE-number	Measures
1	57076	TCA left wbj	6Q0 407 151 L S1	c:14.8	6	57083	ball joint	6Q0 407 366 A	c:14.8
2	57077	TCA right wbj	6Q0 407 151 L S2	c:14.8	7	857606	silentblock for TCA	6Q0 407 182 A	di:12.1 do:32 (*)
3	57176	TCA left wbj	6Q0 407 151 L S3	c:14.8	8	857607	silentblock for TCA	1K0 407 183 E	di:18.5 do:64 (*)
4	57177	TCA right wbj	6Q0 407 151 L S4	c:14.8	9	863502	strut mount	6R0 513 353	di:11.1 do:62 L:58.8
5	57082	ball joint	6Q0 407 365 A	c:14.8	10	863704	mounting axle body	1J0 501 541 C	di:12 do:71.5

Copyright 2021

VOLKSWAGEN
GOLF

GOLF I (17) 08/1974 - 12/1985

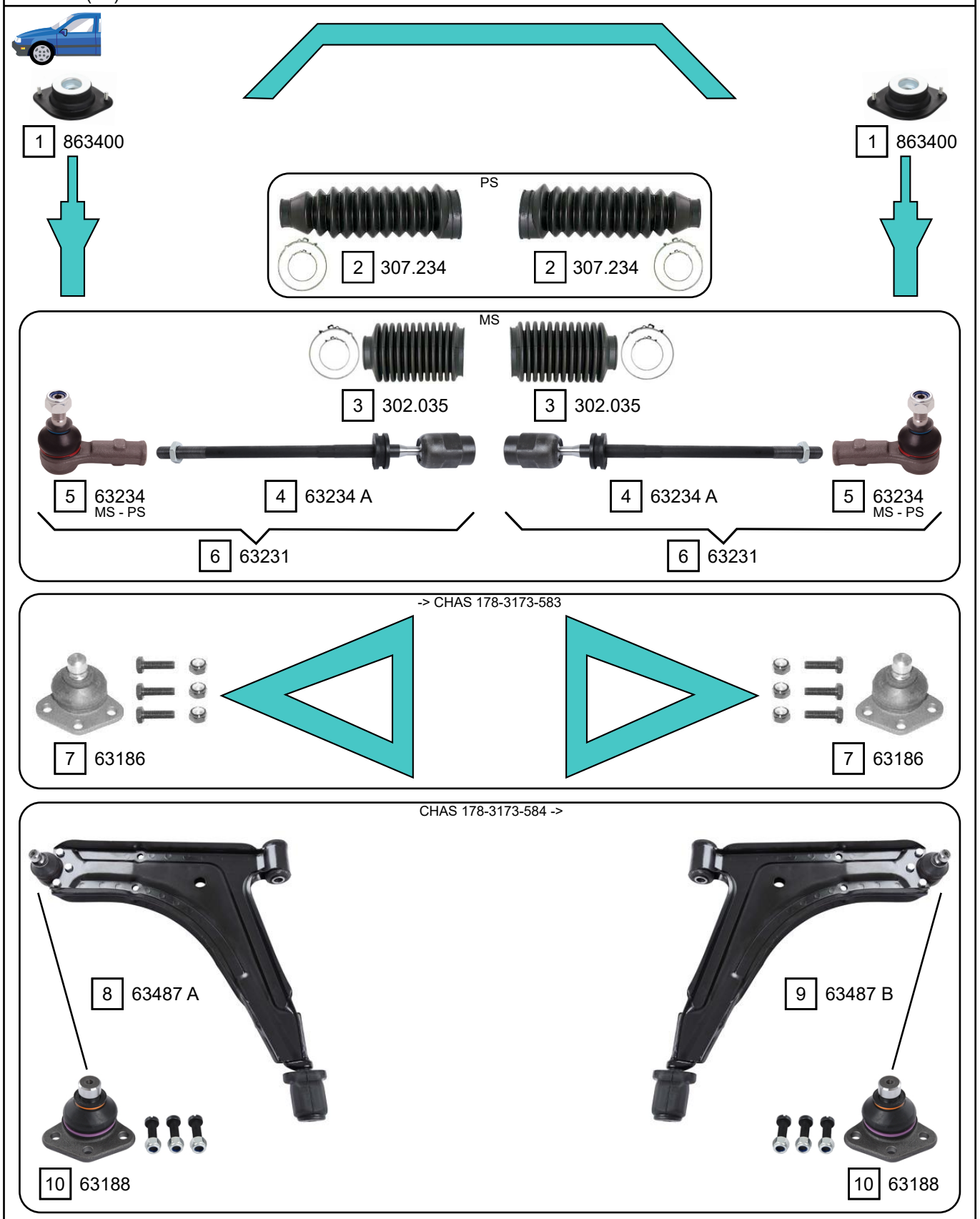

Ref.	Sidem Ref.	Description	OE-number	Measures	Ref.	Sidem Ref.	Description	OE-number	Measures
1	863400	strut mount	171 412 329 A	di:14.2 do:81.5 L:53	6	63231	tie rod	171 419 804	c:12.6
2	307.234	steering rack gaiter	1H0 422 831 B	D:41 d:10 L:210	7	63186	ball joint lower	171 407 365 D	c:15
3	302.035	steering rack gaiter	191 419 831	D:41 d:25 L:120	8	63487 A	TCA left wbj	171 407 153 D S1	c:17
4	63234 A	axial joint	Part of	th:FM22X1.5R L:340	9	63487 B	TCA right wbj	171 407 153 D S2	c:17
5	63234	tie rod end	171 419 812	c:12.6 th:FM14x1.5R	10	63188	ball joint lower	171 407 365 G	c:17

Copyright 2021

VOLKSWAGEN
GOLF

GOLF II (19E, 1G1) 08/1983 - 12/1992

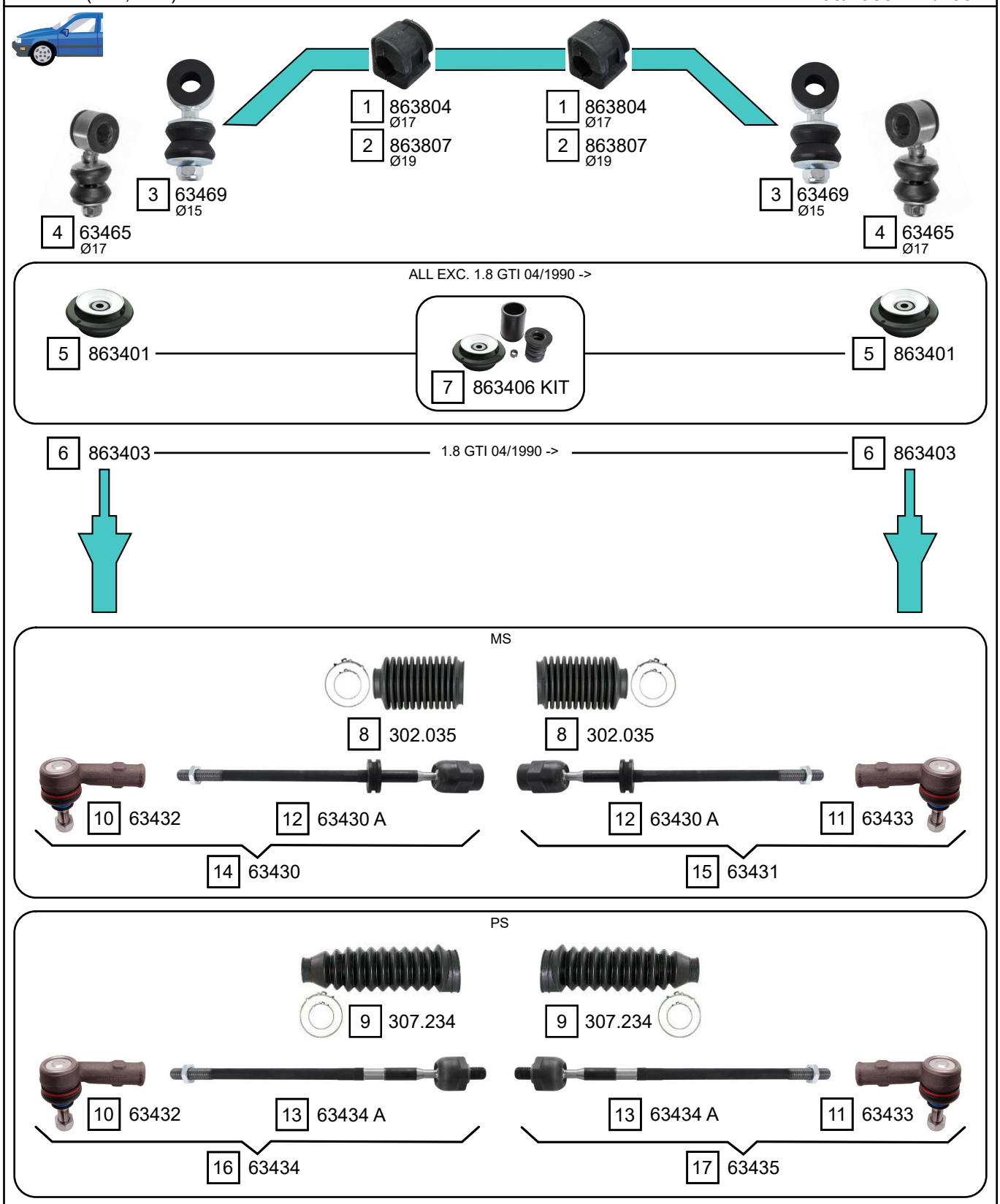

Ref.	Sidem Ref.	Description	OE-number	Measures	Ref.	Sidem Ref.	Description	OE-number	Measures
1	863804	stabiliser mounting	191 411 314	di:17	10	63432	tie rod end left	6N0 419 811	c:12.6 th:FM14x1.5R
2	863807	stabiliser mounting	1H0 411 314	di:19	11	63433	tie rod end right	6N0 422 812	c:12.6 th:FM14x1.5R
3	63469	stabiliser link	191 411 315 B	L:76	12	63430 A	axial joint	Part of	th:FM22X1.5R L:365
4	63465	stabiliser link	6K0 411 315	L:78	13	63434 A	axial joint	Part of	th:MM14X1.5R L:341
5	863401	strut mount	191 412 329	di:14.5 do:89.3 L:52	14	63430	tie rod left	191 419 803	c:12.6
6	863403	strut mount	357 412 329	di:14 do:127 L:55	15	63431	tie rod right	191 419 804	c:12.6
7	863406 KIT	strut mount kit	191 412 329 S1	di:14.5 do:127 L:53	16	63434	tie rod left	191 422 803 A	c:12.6
8	302.035	steering rack gaiter	191 419 831	D:41 d:25 L:120	17	63435	tie rod right	191 422 804 A	c:12.6
9	307.234	steering rack gaiter	1H0 422 831 B	D:41 d:10 L:210					

Copyright 2021

GOLF II (19E, 1G1) 08/1983 - 12/1992

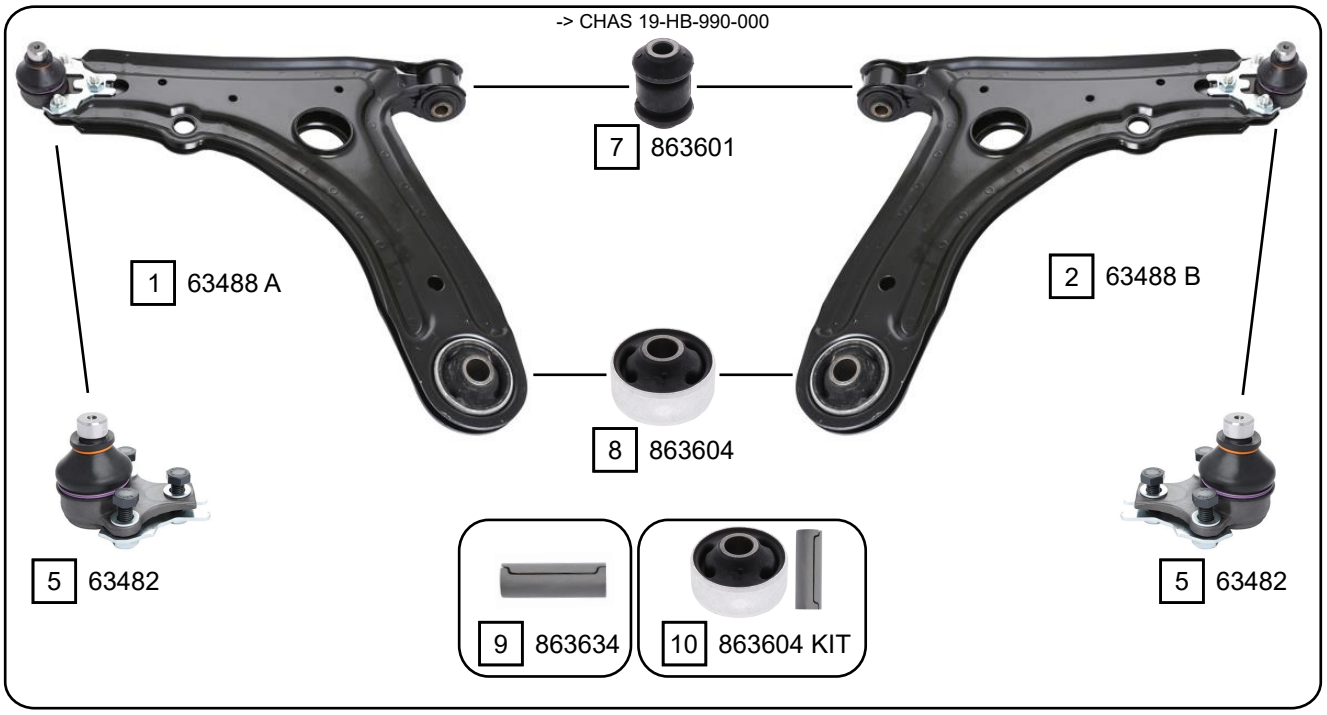

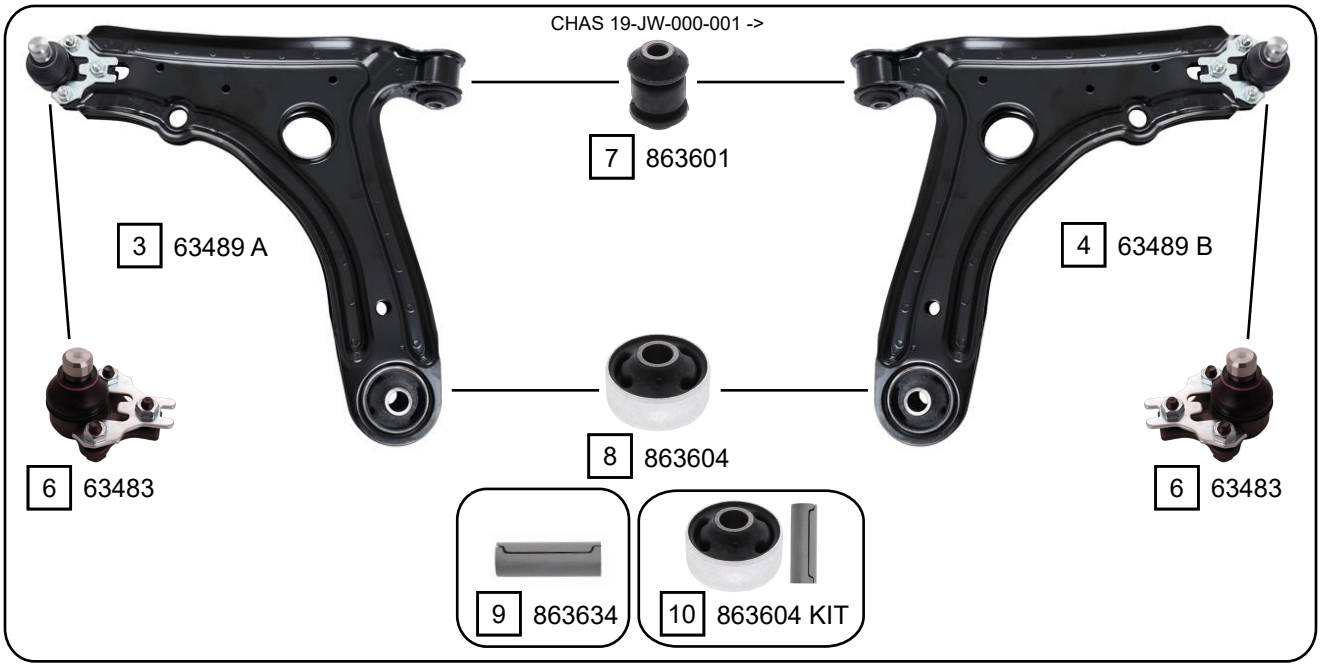

Ref.	Sidem Ref.	Description	OE-number	Measures	Ref.	Sidem Ref.	Description	OE-number	Measures
1	63488 A	TCA left wbj	191 407 151 B S1	c:17	6	63483	ball joint lower	357 407 365 A	c:19
2	63488 B	TCA right wbj	191 407 151 B S2	c:17	7	863601	silentblock for TCA	357 407 182	di:12 do:32.6 (*)
3	63489 A	TCA left wbj	191 407 151 B S1	c:19	8	863604	silentblock for TCA	191 407 181 D	di:17 do:60.1 (*)
4	63489 B	TCA right wbj	191 407 151 B S2	c:19	9	863634	sleeve	191 407 190 A	di:15.8 do:17.2
5	63482	ball joint lower	191 407 365 B	c:17	10	863604 KIT	silentblock for TCA + sleeve	191 407 181 E S1	di:17 do:60.1 (*)

Copyright 2021

VOLKSWAGEN
GOLF

GOLF II (19E, 1G1) 08/1983 - 12/1992

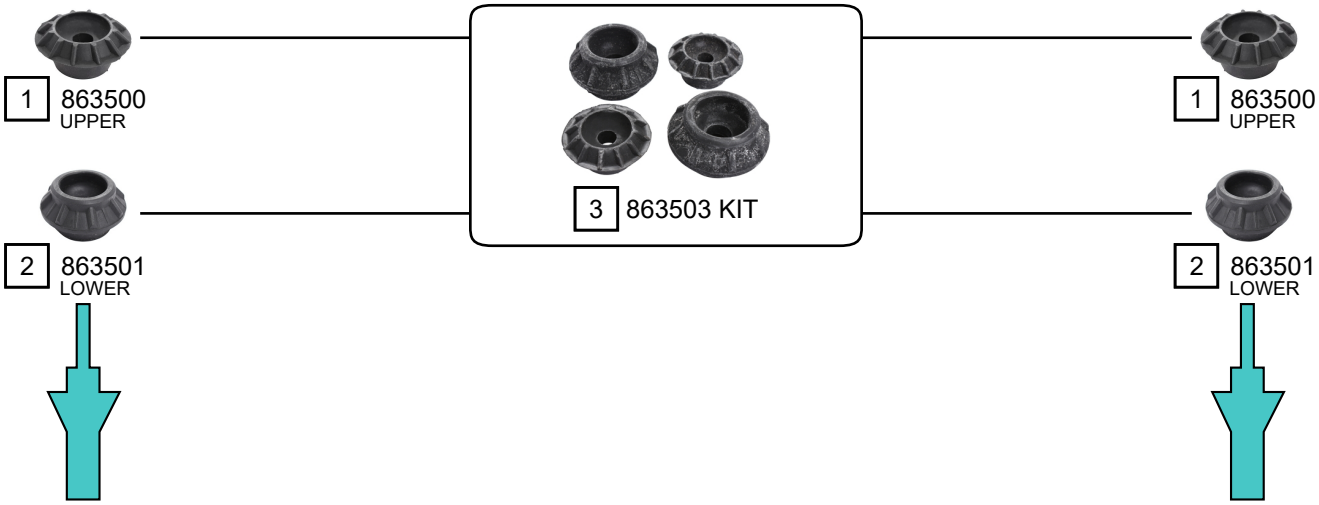

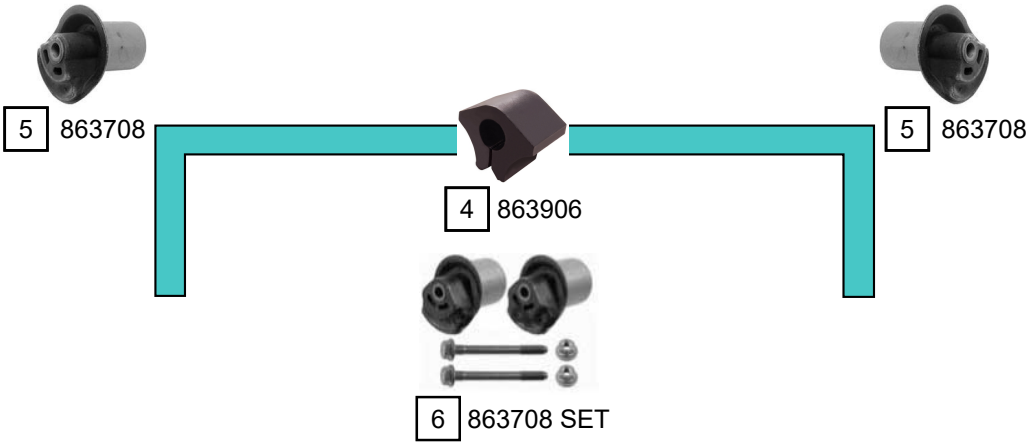

Ref.	Sidem Ref.	Description	OE-number	Measures	Ref.	Sidem Ref.	Description	OE-number	Measures
1	863500	strut mount	191 512 335	di:13.5 do:59 L:27.5	4	863906	stabiliser mounting	871 511 423	di:16.5
2	863501	strut mount	191 512 333	di:17.5 do:70 L:40	5	863708	mounting axle body	191 501 541	di:12.2 do:44.4
3	863503 KIT	strut mount kit	191 512 335 S1	di:13.5	6	863708 SET	mounting axle body set	191 501 541 S1	di:12.2 do:44.4

Copyright 2021

VOLKSWAGEN
GOLF

GOLF III (1H1)	08/1991 - 09/1997
GOLF III VARIANT (1H5)	07/1993 - 04/1999
GOLF III - IV CABRIO (1E7)	07/1993 - 06/2002

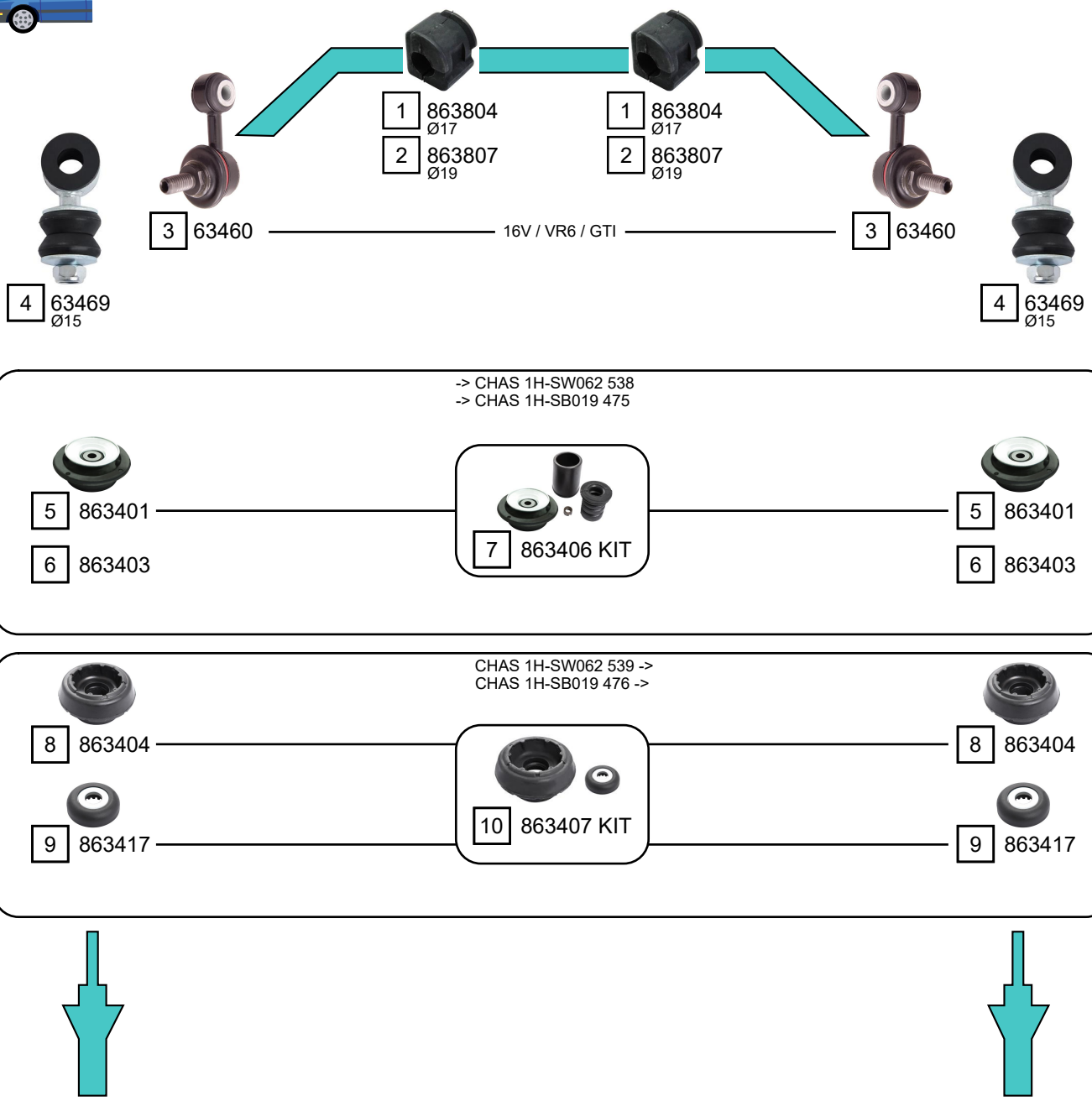

Ref.	Sidem Ref.	Description	OE-number	Measures	Ref.	Sidem Ref.	Description	OE-number	Measures
1	863804	stabiliser mounting	191 411 314	di:17	6	863403	strut mount	357 412 329	di:14 do:127 L:55
2	863807	stabiliser mounting	1H0 411 314	di:19	7	863406 KIT	strut mount kit	191 412 329 S1	di:14.5 do:127 L:53
3	63460	stabiliser link	535 411 315	L:51	8	863404	strut mount	7M0 412 331	di:26.5 do:96.7 L:50
4	63469	stabiliser link	191 411 315 B	L:76	9	863417	bearing	1J0 412 249	di:14.3 do:45.3 L:13.4
5	863401	strut mount	191 412 329	di:14.5 do:89.3 L:52	10	863407 KIT	strut mount kit	7M0 412 331 S1	di:14.3 do:98 L:50

Copyright 2021

VOLKSWAGEN
GOLF

GOLF III (1H1)	08/1991 - 09/1997
GOLF III VARIANT (1H5)	07/1993 - 04/1999
GOLF III - IV CABRIO (1E7)	07/1993 - 06/2002

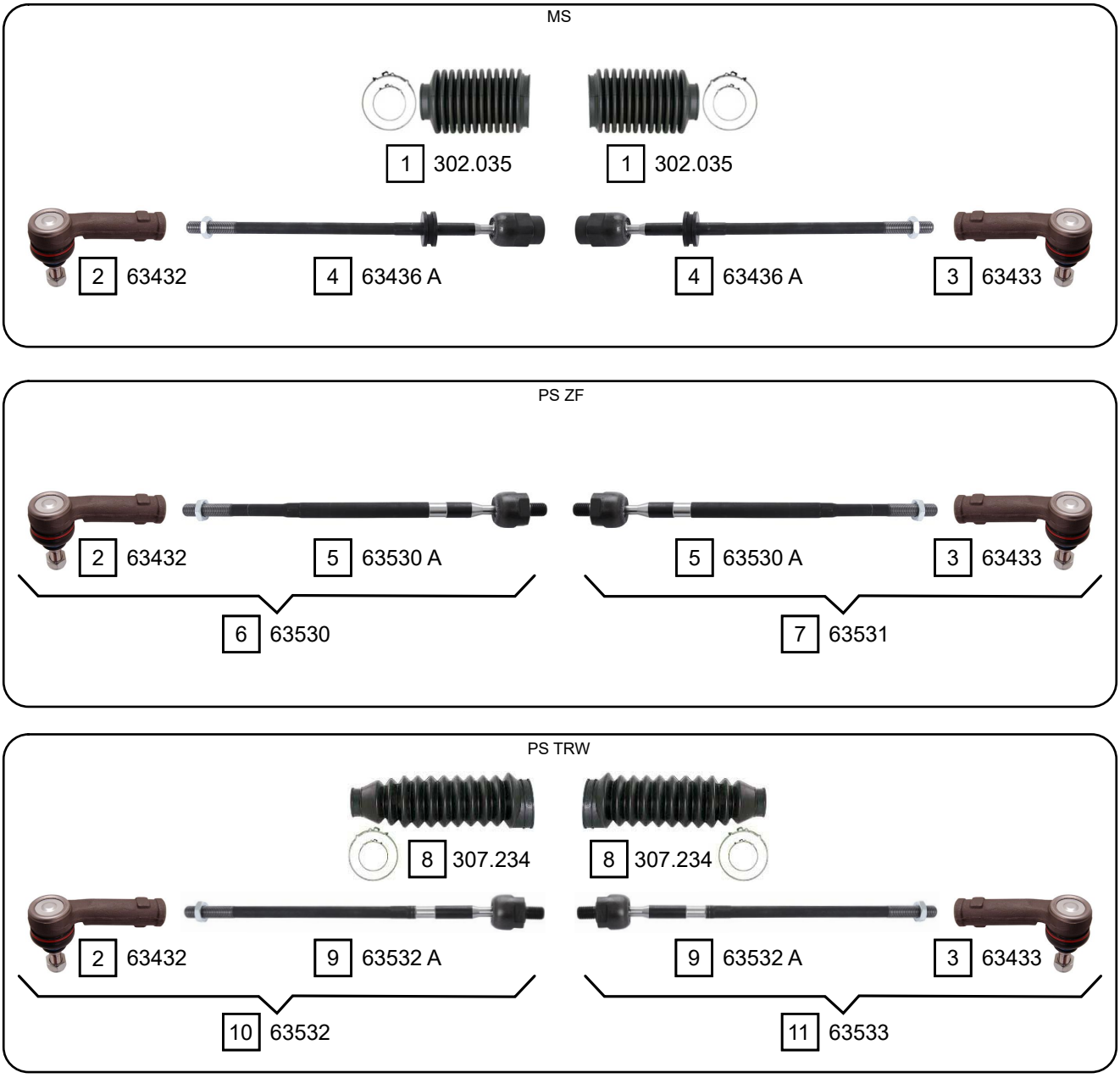

Ref.	Sidem Ref.	Description	OE-number	Measures	Ref.	Sidem Ref.	Description	OE-number	Measures
1	302.035	steering rack gaiter	191 419 831	D:41 d:25 L:120	7	63531	tie rod right	1H0 422 804 B	c:12.6
2	63432	tie rod end left	6N0 419 811	c:12.6 th:FM14x1.5R	8	307.234	steering rack gaiter	1H0 422 831 B	D:41 d:10 L:210
3	63433	tie rod end right	6N0 422 812	c:12.6 th:FM14x1.5R	9	63532 A	axial joint	Part of	th:MM14X1.5R L:371
4	63436 A	axial joint	1H0 419 821	th:FM22X1.5R L:395	10	63532	tie rod left	1H0 422 803 D	c:12.6
5	63530 A	axial joint	Part of	th:MM14X1.5R L:360	11	63533	tie rod right	1H0 422 804 D	c:12.6
6	63530	tie rod left	1H0 422 803 B	c:12.6					

Copyright 2021

VOLKSWAGEN
GOLF

GOLF III (1H1)	08/1991 - 09/1997
GOLF III VARIANT (1H5)	07/1993 - 04/1999
GOLF III - IV CABRIO (1E7)	07/1993 - 06/2002

1.4/1.6/1.8/1.9D

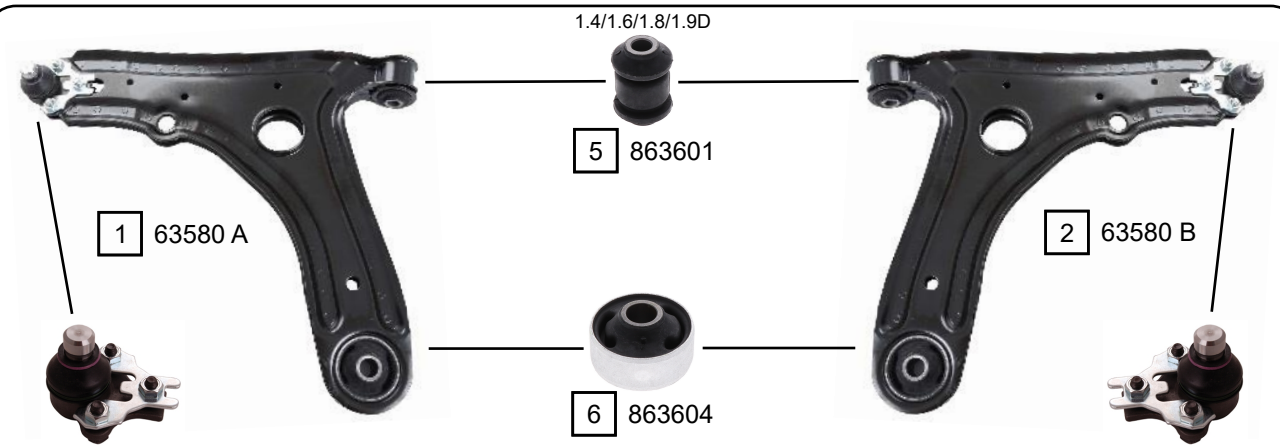

2.0/2.8/2.9

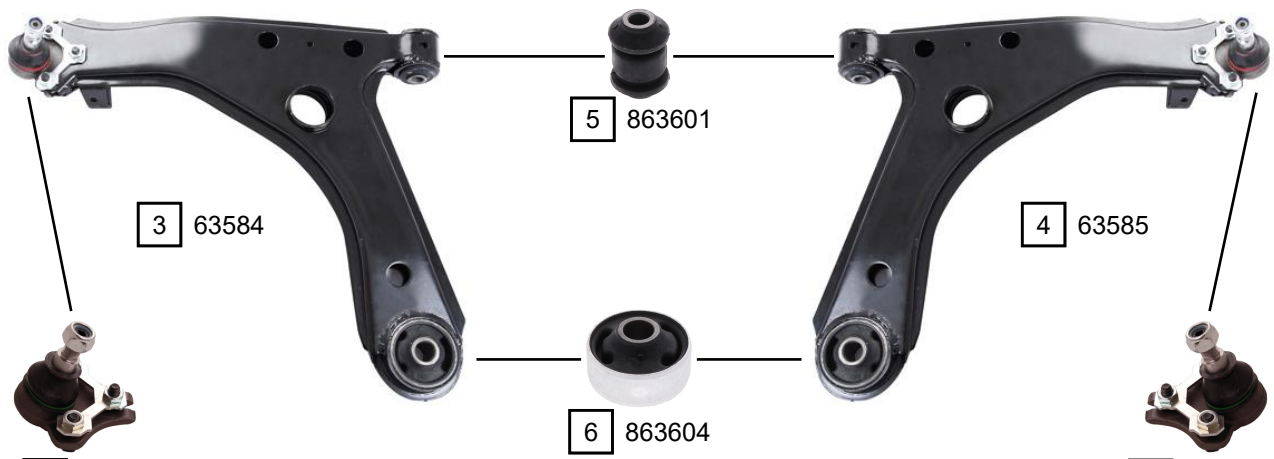

Ref.	Sidem Ref.	Description	OE-number	Measures	Ref.	Sidem Ref.	Description	OE-number	Measures
1	63580 A	TCA left wbj	1H0 407 151 S1	c:19	5	863601	silentblock for TCA	357 407 182	di:12 do:32.6 (*)
2	63580 B	TCA right wbj	1H0 407 151 S2	c:19	6	863604	silentblock for TCA	191 407 181 D	di:17 do:60.1 (*)
3	63584	TCA left wbj	1H0 407 151 A S1	c:16.5	7	63483	ball joint lower	357 407 365 A	c:19
4	63585	TCA right wbj	1H0 407 152 S1	c:16.5	8	63485	ball joint lower	1H0 407 365	c:16.5

Copyright 2021

VOLKSWAGEN
GOLF

GOLF III (1H1)	08/1991 - 09/1997
GOLF III VARIANT (1H5)	07/1993 - 04/1999
GOLF III - IV CABRIO (1E7)	07/1993 - 06/2002

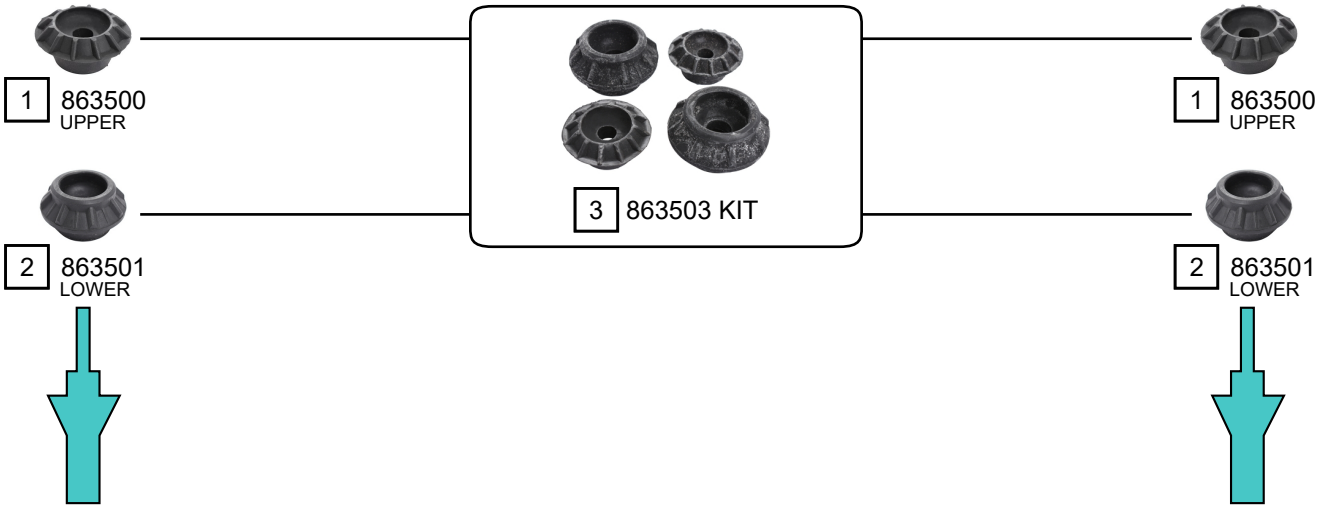

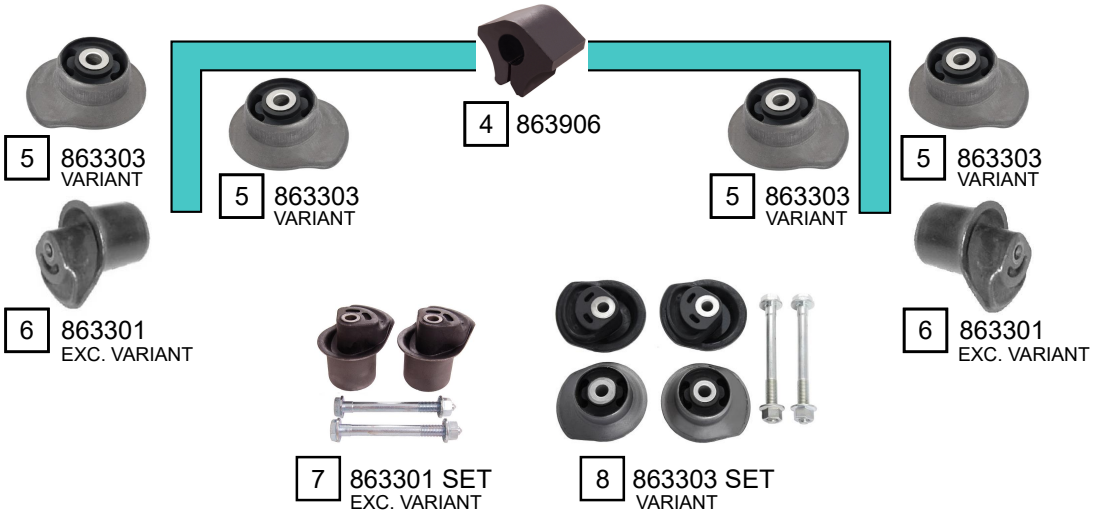

Ref.	Sidem Ref.	Description	OE-number	Measures	Ref.	Sidem Ref.	Description	OE-number	Measures
1	863500	strut mount	191 512 335	di:13.5 do:59 L:27.5	5	863303	mounting axle body	1H9 501 541	di:12 do:56.5
2	863501	strut mount	191 512 333	di:17.5 do:70 L:40	6	863301	mounting axle body	1H0 501 541 A	di:12 do:56
3	863503 KIT	strut mount kit	191 512 335 S1	di:13.5	7	863301 SET	mounting axle body set	1H0 501 541 A S1	di:12 do:56
4	863906	stabiliser mounting	871 511 423	di:16.5	8	863303 SET	mounting axle body set	1H9 501 541 S1	di:12.2 do:56.5

Copyright 2021

VOLKSWAGEN
GOLF

GOLF IV (1J1) 08/1997 - 06/2005
GOLF IV VARIANT (1J5) 05/1999 - 06/2006

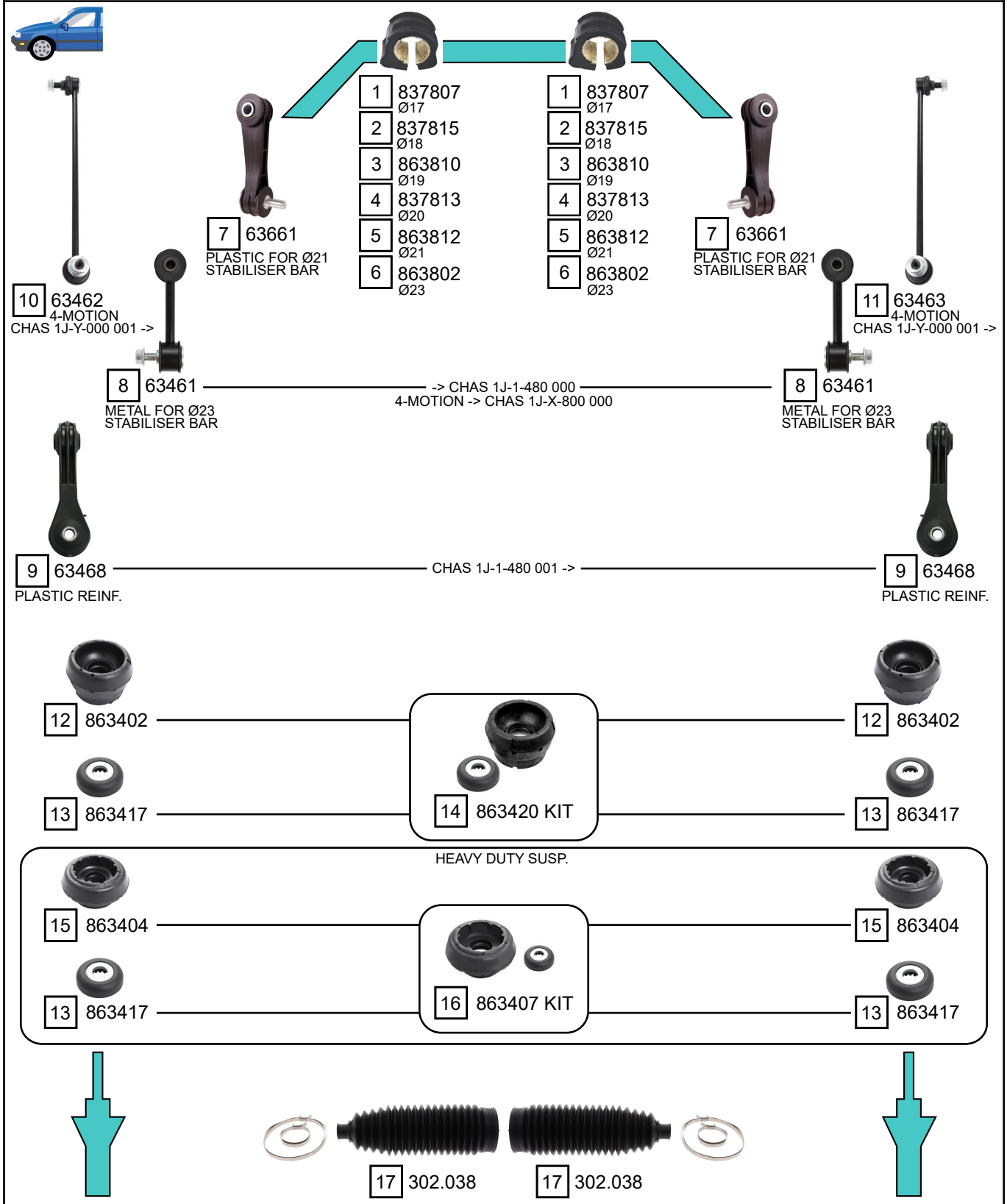

Ref.	Sidem Ref.	Description	OE-number	Measures	Ref.	Sidem Ref.	Description	OE-number	Measures
1	837807	stabiliser mounting	1J0 411 314 S	di:17	10	63462	stabiliser link left	1J0 411 315 D	L:336
2	837815	stabiliser mounting	1J0 411 314 AC	di:18	11	63463	stabiliser link right	1J0 411 316 D	L:336
3	863810	stabiliser mounting	1J0 411 314 R	di:19	12	863402	strut mount	1J0 412 331 C	di:26 do:82 L:53
4	837813	stabiliser mounting	1J0 411 314 P	di:19	13	863417	bearing	1J0 412 249	di:14.3 do:45.3 L:13.4
5	863812	stabiliser mounting	1J0 411 314 T	di:21	14	863420 KIT	strut mount kit	1J0 412 331 C S1	di:26 do:82 L:53
6	863802	stabiliser mounting	1J0 411 314 G	di:23	15	863404	strut mount	7M0 412 331	di:26.5 do:96.7 L:50
7	63661	stabiliser link	1J0 411 315 J	L:105	16	863407 KIT	strut mount kit	7M0 412 331 S1	di:14.3 do:98 L:50
8	63461	stabiliser link	1J0 411 315 G	L:105	17	302.038	steering rack gaiter	1J0 422 831 B	D:50 d:15 L:186
9	63468	stabiliser link	1J0 411 315 K	L:105					

Copyright 2021

VOLKSWAGEN
GOLF

GOLF IV (1J1) 08/1997 - 06/2005
GOLF IV VARIANT (1J5) 05/1999 - 06/2006

EXC. VARIANT
-> CHAS 1J-WP050832 / -> CHAS 1J-WD039150 / -> CHAS 1J-WB027484 / -> CHAS 1J-WW062359

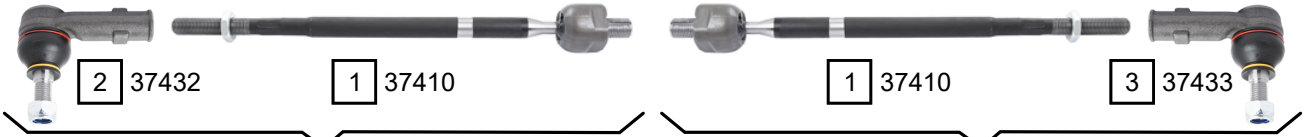

GOLF + VARIANT
CHAS 1J-WP050833 -> / CHAS 1J-WD039151 -> / CHAS 1J-WB027485 -> / CHAS 1J-WW062360 ->

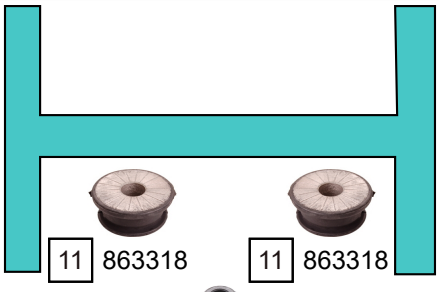

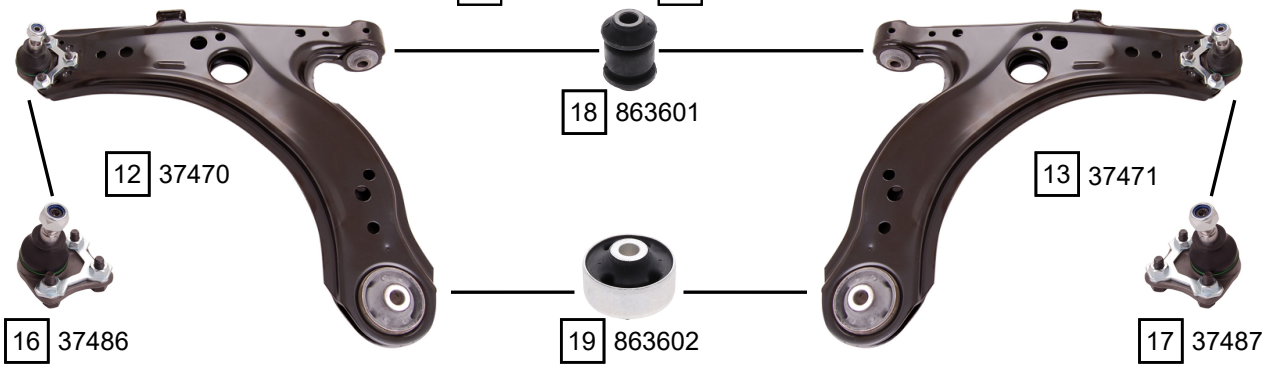

REINFORCED - ONLY REPLACE IN PAIRS

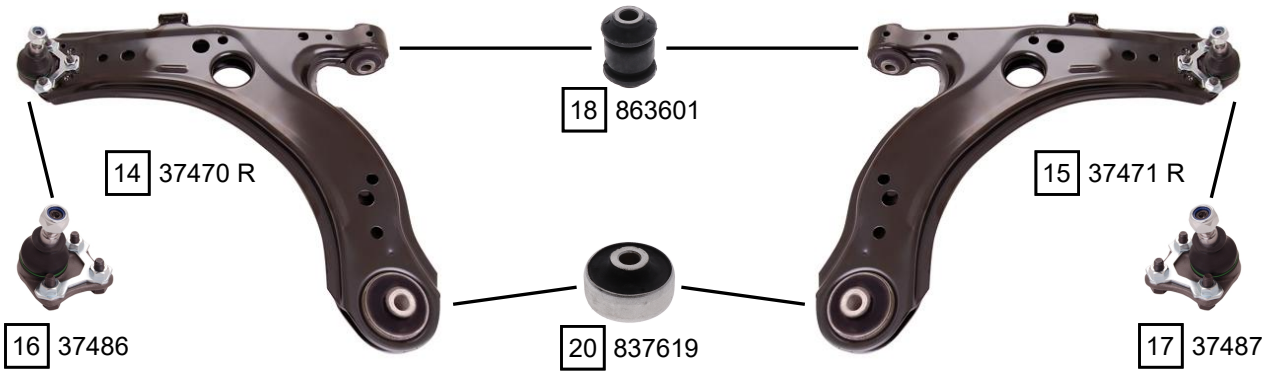

Ref.	Sidem Ref.	Description	OE-number	Measures	Ref.	Sidem Ref.	Description	OE-number	Measures
1	37410	axial joint	Part of	th:MM16X1.5R L:338	11	863318	mounting axle body	1J0 199 429	di:18.2 do:50.5
2	37432	tie rod end left	1J0 422 811 A	c:13.3 th:FM14x1.5R	12	37470	TCA left wbj	1J0 407 151 C S1	c:14.9
3	37433	tie rod end right	1J0 422 812 A	c:13.3 th:FM14x1.5R	13	37471	TCA right wbj	1J0 407 151 C S2	c:14.9
4	37420	tie rod left	1J0 422 803 A	c:13.3	14	37470 R	TCA left wbj	1J0 407 151 C S1 R	c:14.9
5	37421	tie rod right	1J0 422 804 A	c:13.3	15	37471 R	TCA right wbj	1J0 407 151 C S2 R	c:14.9
6	37611	axial joint	Part of	th:MM16X1.5R L:319	16	37486	ball joint left	1J0 407 365 J	c:14.9
7	37434	tie rod end left	1J0 422 811 B	c:13.2 th:FM14x1.5R	17	37487	ball joint right	1J0 407 366 J	c:14.9
8	37435	tie rod end right	1J0 422 812 B	c:13.2 th:FM14x1.5R	18	863601	silentblock for TCA	357 407 182	di:12 do:32.6 (*)
9	37422	tie rod left	1J0 422 803 H	c:13.2	19	863602	silentblock for TCA	1J0 407 181	di:13 do:60 (*)
10	37423	tie rod right	1J0 422 804 H	c:13.2	20	837619	silentblock for TCA	6R0 407 181 B	di:13.2 do:60.2 (*)

Copyright 2021

VOLKSWAGEN
GOLF

GOLF IV (1J1) 08/1997 - 06/2005
GOLF IV VARIANT (1J5) 05/1999 - 06/2006

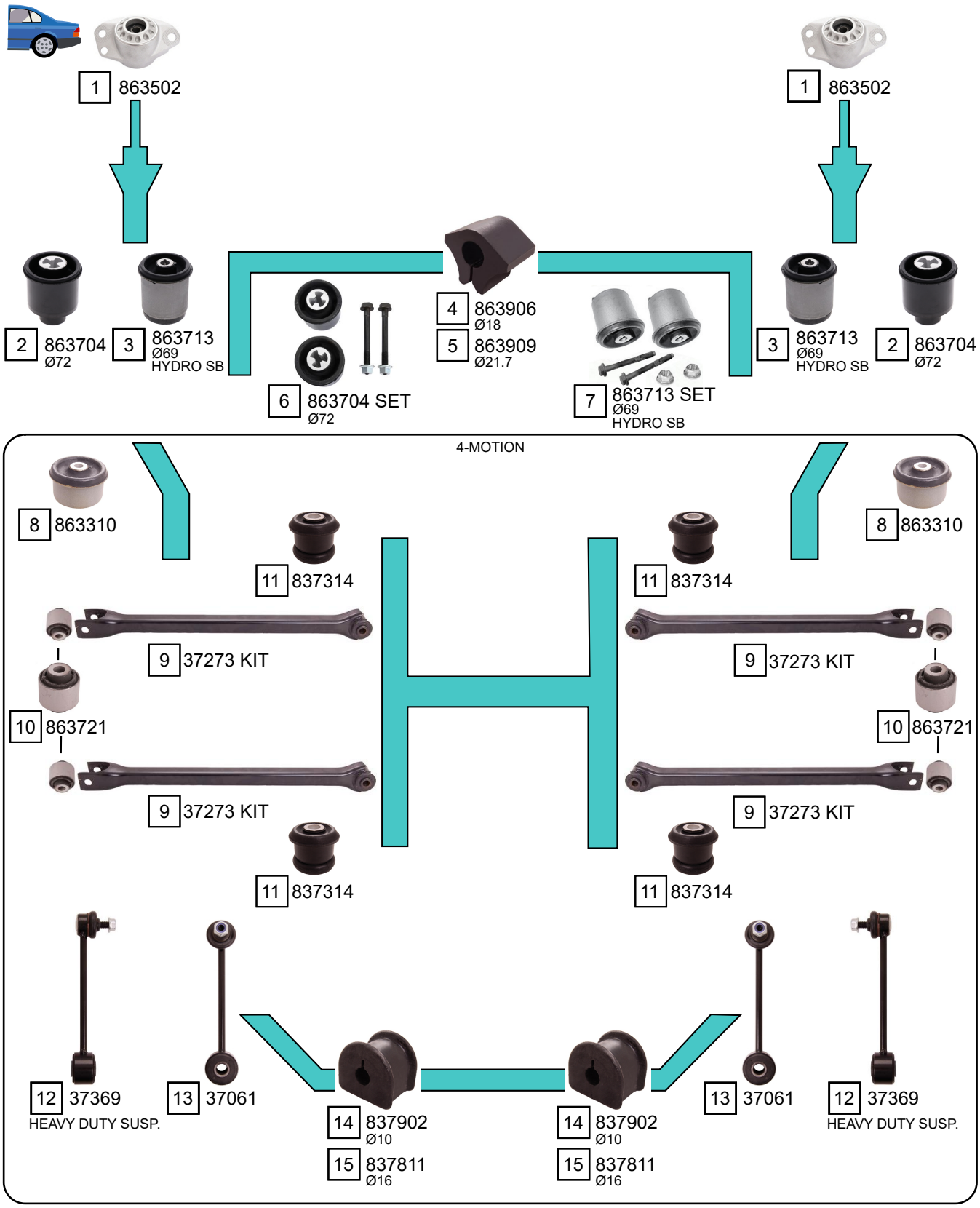

Ref.	Sidem Ref.	Description	OE-number	Measures	Ref.	Sidem Ref.	Description	OE-number	Measures
1	863502	strut mount	6R0 513 353	di:11.1 do:62 L:58.8	9	37273 KIT	track rod	1J0 505 323 L S1	L:517
2	863704	mounting axle body	1J0 501 541 C	di:12 do:71.5	10	863721	silentblock for TCA	1J0 505 203	di:12.3 do:43.6 (*)
3	863713	mounting axle body	1J0 501 541 D	di:13.2 do:69	11	837314	mounting axle body	1J0 505 145 B	di:16 do:51.6
4	863906	stabiliser mounting	871 511 423	di:16.5	12	37369	stabiliser link	1J0 505 466 C	L:194
5	863909	stabiliser mounting	1J0 511 423	di:18	13	37061	stabiliser link rear axle	1J0 505 466 B	L:175
6	863704 SET	mounting axle body set	1J0 501 541 C S1	do:71.5	14	837902	stabiliser mounting	8D0 511 327 C	di:10.5
7	863713 SET	mounting axle body set	1J0 501 541 D S1	do:69	15	837811	stabiliser mounting	4B0 511 327	di:16
8	863310	mounting axle body	1J0 505 171 B	di:12 do:72					

Copyright 2021

VOLKSWAGEN
GOLF

SIDEM
Experts know why

GOLF V (1K1) 10/2003 - 02/2009
GOLF V PLUS (5M1) 01/2005 - 02/2009
GOLF V VARIANT (1K5) 06/2007 - 07/2009

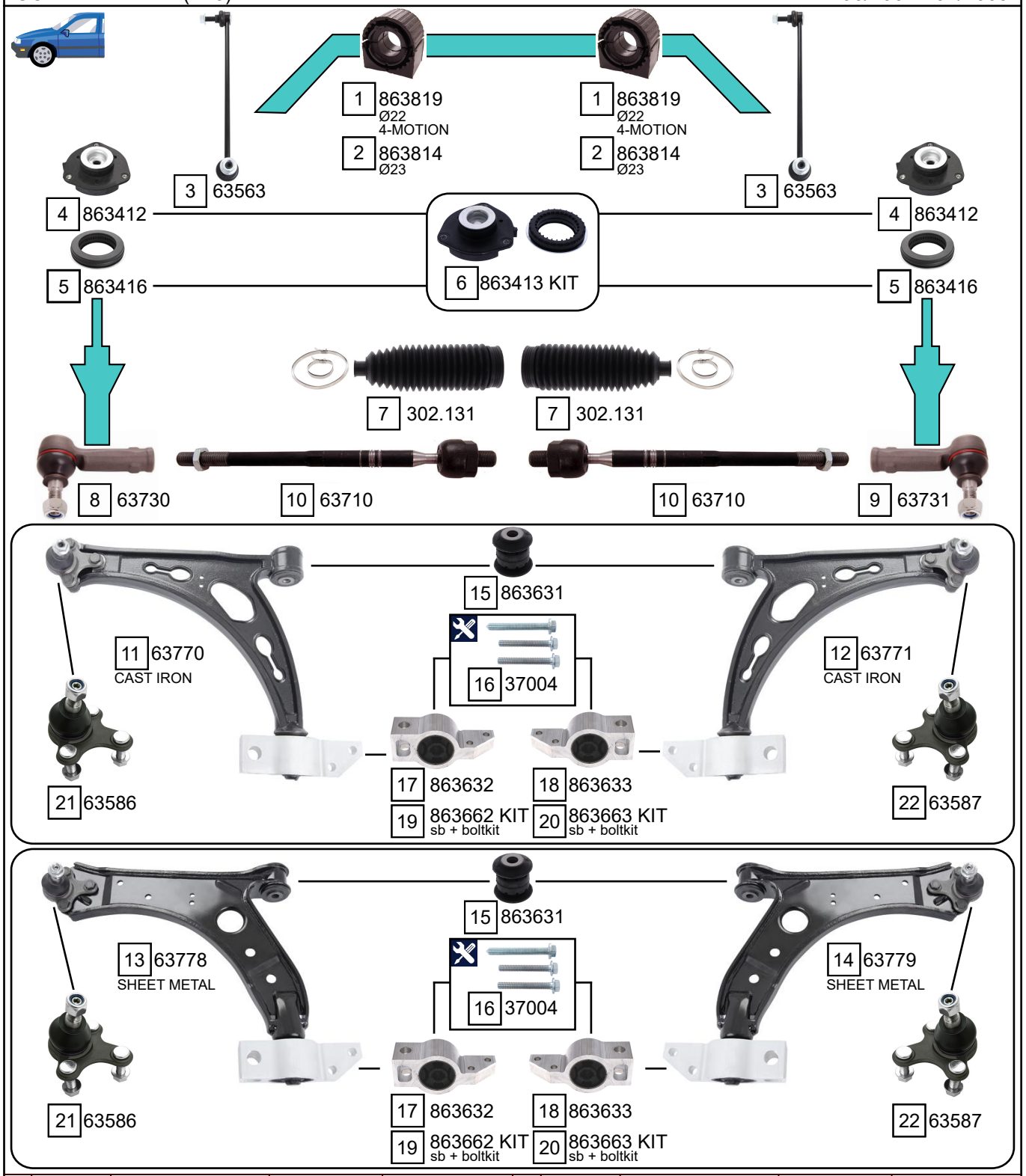

Ref.	Sidem Ref.	description	OE-number	measures	Ref.	Sidem Ref.	description	OE-number	measures
1	863819	stabiliser mounting	Part of	di:20	12	63771	TCA right wbj	1K0 407 152 AC	c:15.4
2	863814	stabiliser mounting	Part of	di:21	13	63778	TCA left wbj	1K0 407 151 AA S1	c:15.4
3	63563	stabiliser link	5Q0 411 315 A	L:335	14	63779	TCA right wbj	1K0 407 152 AA S2	c:15.4
4	863412	strut mount	1K0 412 331 B	di:14.2 L:49.5	15	863631	silentblock for TCA	1K0 407 182	di:12.1 do:40 (*)
5	863416	bearing	1K0 412 249 B	di:68.5 do:112 L:25.5	16	37004	mounting kit	N 910 398 02 S1	th:M10x1.5R
6	863413 KIT	strut mount kit	1K0 412 331 B S1	di:14.2 L:50	17	863632	silentblock for TCA	1K0 199 231 J	di:18.8 (*)
7	302.131	steering rack gaiter	1K0 423 831 A	D:50 d:15 L:193	18	863633	silentblock for TCA	1K0 199 232 J	di:18.8 (*)
8	63730	tie rod end left	1K0 423 811 J S1	c:13.2 th:FM16x1.5R	19	863662 KIT	silentblock kit	1K0 199 231 J S1	
9	63731	tie rod end right	1K0 423 812 J S1	c:13.2 th:FM16x1.5R	20	863663 KIT	silentblock kit	1K0 199 232 J S1	
10	63710	axial joint	1K0 423 810 A	th:MM16X1.5R L:312	21	63586	ball joint left	1K0 407 365 C	c:15.4
11	63770	TCA left wbj	1K0 407 151 AC	c:15.4	22	63587	ball joint right	1K0 407 366 C	c:15.4

Copyright 2021

GOLF V (1K1) 10/2003 - 02/2009
GOLF V PLUS (5M1) 01/2005 - 02/2009
GOLF V VARIANT (1K5) 06/2007 - 07/2009

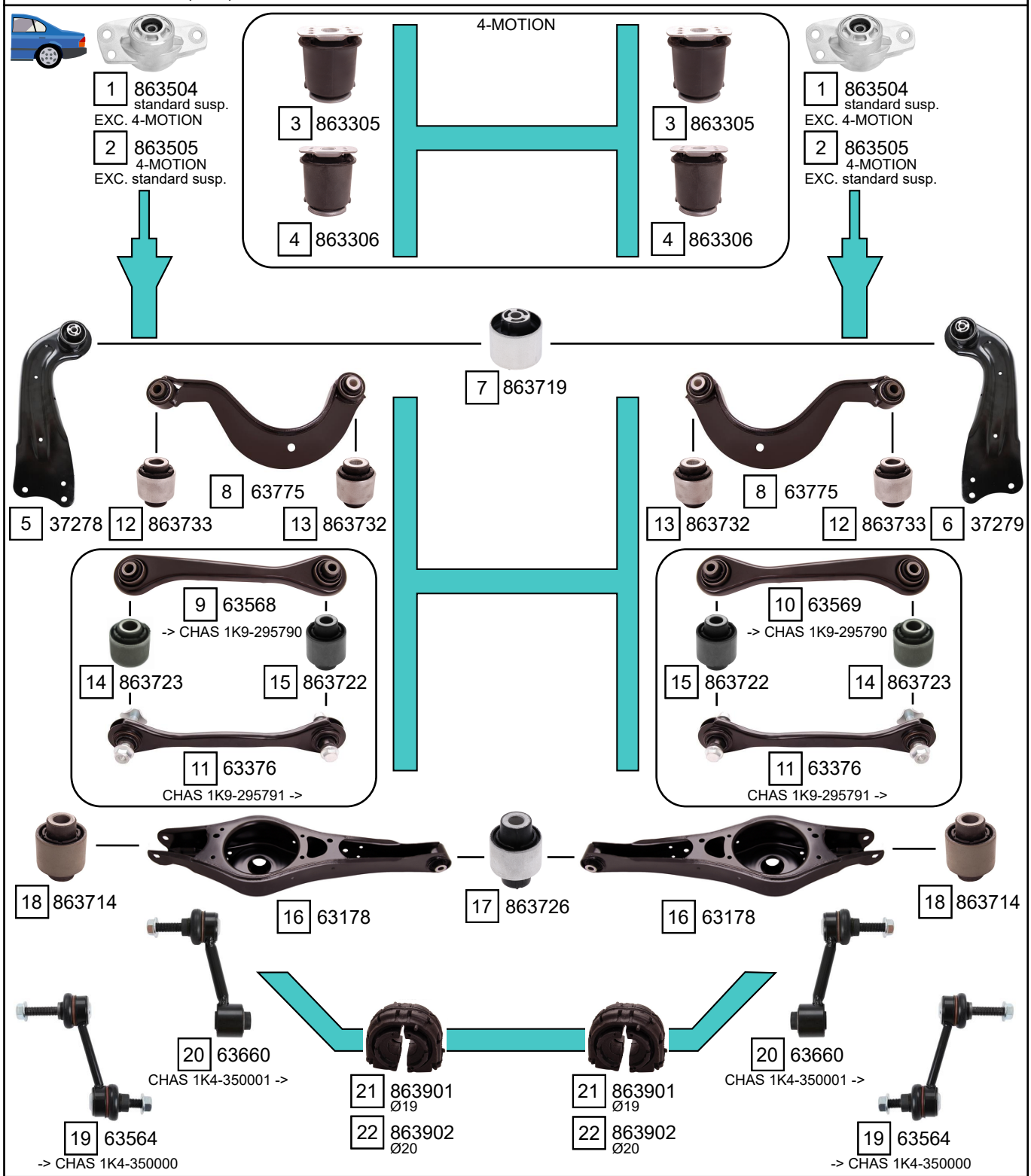

Ref.	Sidem Ref.	description	OE-number	measures	Ref.	Sidem Ref.	description	OE-number	measures
1	863504	strut mount	1K0 513 353 G	di:10.5 do:63 L:62	12	863733	silentblock for TCA	Part of	di:14.3 do:38.2 (*)
2	863505	strut mount	1K0 513 353 H	di:10.4 L:62	13	863732	silentblock for TCA	Part of	di:12.1 do:38.3 (*)
3	863305	mounting axle body	1K0 505 145 J	di:18 do:70	14	863723	silentblock for TCA	Part of	di:14.2 do:40.1 (*)
4	863306	mounting axle body	1K0 505 145 K	di:18 do:70	15	863722	silentblock for TCA	Part of	di:12.1 do:40.4 (*)
5	37278	TCA left	1K0 505 223 K	L:373	16	63178	TCA	1K0 505 311 AB	
6	37279	TCA right	1K0 505 224 K	L:373	17	863726	silentblock for TCA	Part of	di:12.1 do:42 (*)
7	863719	mounting axle body	3C0 505 541	di:12.2 do:60.2 (*)	18	863714	silentblock for TCA	1K0 505 553 A	di:12.2 do:37.4 (*)
8	63775	track rod	1K0 505 323 N	L:305.5	19	63564	stabiliser link rear axle	1K0 505 465 C	L:96
9	63568	track rod	1K0 501 529 F	L:298	20	63660	stabiliser link rear axle	1K0 505 465 K	L:95
10	63569	track rod	1K0 501 530 C	L:298	21	863901	stabiliser mounting	1K0 511 327 AP	di:17
11	63376	track rod	1K0 501 529 H	L:298	22	863902	stabiliser mounting	1K0 511 327 AQ	di:19

Copyright 2021

VOLKSWAGEN
GOLF

SIDEM
Experts know why

GOLF VI (5K1)	10/2008 - 11/2013
GOLF VI PLUS (521)	03/2009 - 01/2014
GOLF VI VARIANT (AJ5)	07/2009 - 07/2013
GOLF VI CABRIO (517)	03/2011 - 04/2016

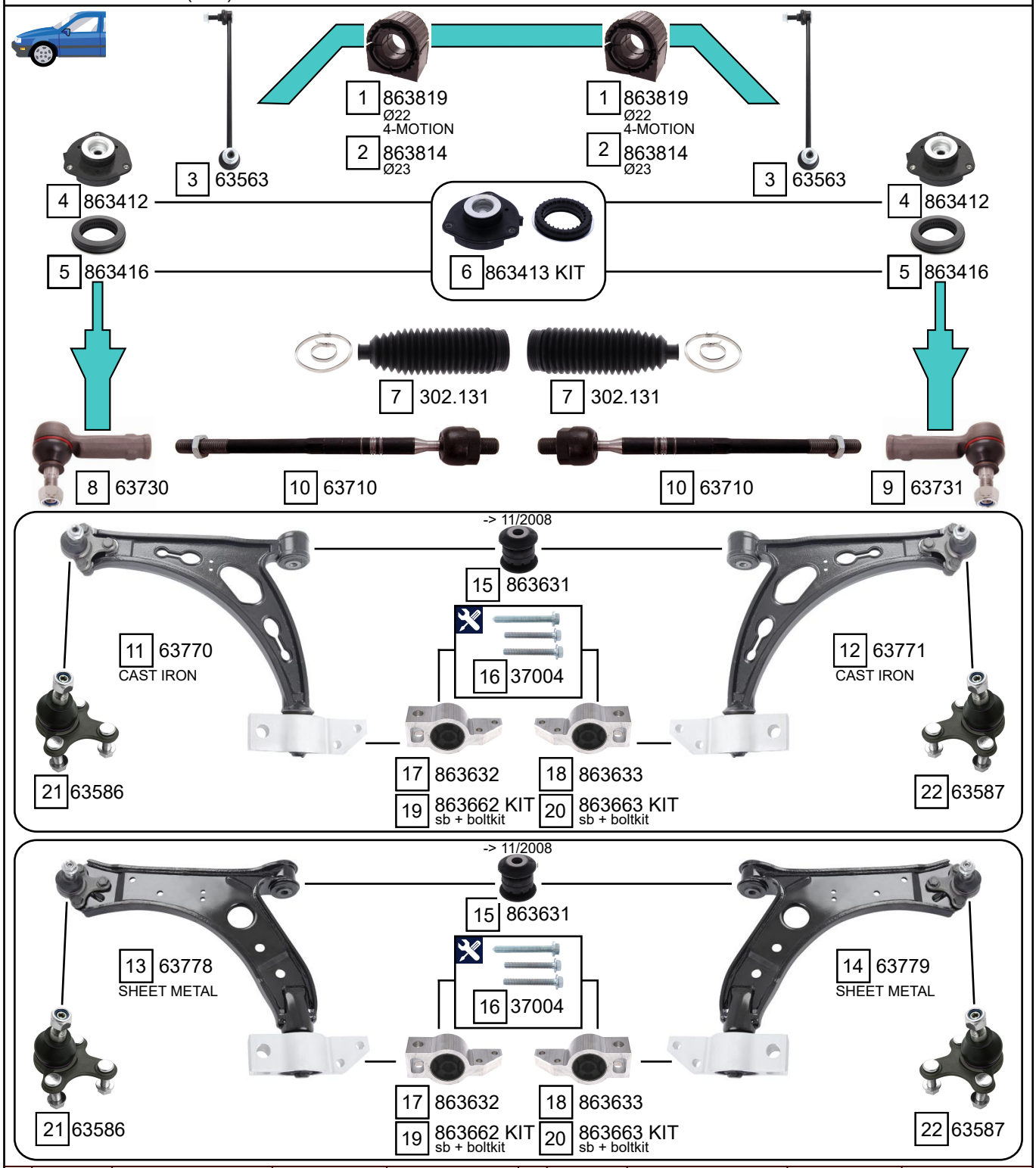

Ref.	Sidem Ref.	description	OE-number	measures	Ref.	Sidem Ref.	description	OE-number	measures
1	863819	stabiliser mounting	Part of	di:20	12	63771	TCA right wbj	1K0 407 152 AC	c:15.4
2	863814	stabiliser mounting	Part of	di:21	13	63778	TCA left wbj	1K0 407 151 AA S1	c:15.4
3	63563	stabiliser link	5Q0 411 315 A	L:335	14	63779	TCA right wbj	1K0 407 152 AA S2	c:15.4
4	863412	strut mount	1K0 412 331 B	di:14.2 L:49.5	15	863631	silentblock for TCA	1K0 407 182	di:12.1 do:40 (*)
5	863416	bearing	1K0 412 249 B	di:68.5 do:112 L:25.5	16	37004	mounting kit	N 910 398 02 S1	th:M10x1.5R
6	863413 KIT	strut mount kit	1K0 412 331 B S1	di:14.2 L:50	17	863632	silentblock for TCA	1K0 199 231 J	di:18.8 (*)
7	302.131	steering rack gaiter	1K0 423 831 A	D:50 d:15 L:193	18	863633	silentblock for TCA	1K0 199 232 J	di:18.8 (*)
8	63730	tie rod end left	1K0 423 811 J S1	c:13.2 th:FM16x1.5R	19	863662 KIT	silentblock kit	1K0 199 231 J S1	
9	63731	tie rod end right	1K0 423 812 J S1	c:13.2 th:FM16x1.5R	20	863663 KIT	silentblock kit	1K0 199 232 J S1	
10	63710	axial joint	1K0 423 810 A	th:MM16X1.5R L:312	21	63586	ball joint left	1K0 407 365 C	c:15.4
11	63770	TCA left wbj	1K0 407 151 AC	c:15.4	22	63587	ball joint right	1K0 407 366 C	c:15.4

Copyright 2021

GOLF VI (5K1)	10/2008 - 11/2013
GOLF VI PLUS (521)	03/2009 - 01/2014
GOLF VI VARIANT (AJ5)	07/2009 - 07/2013
GOLF VI CABRIO (517)	03/2011 - 04/2016

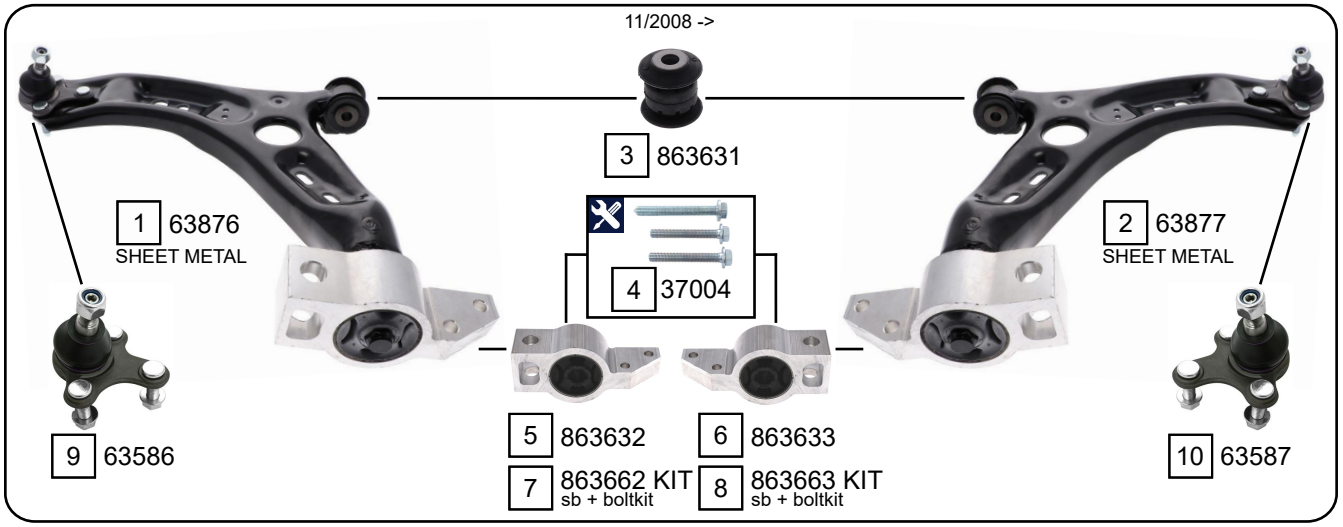

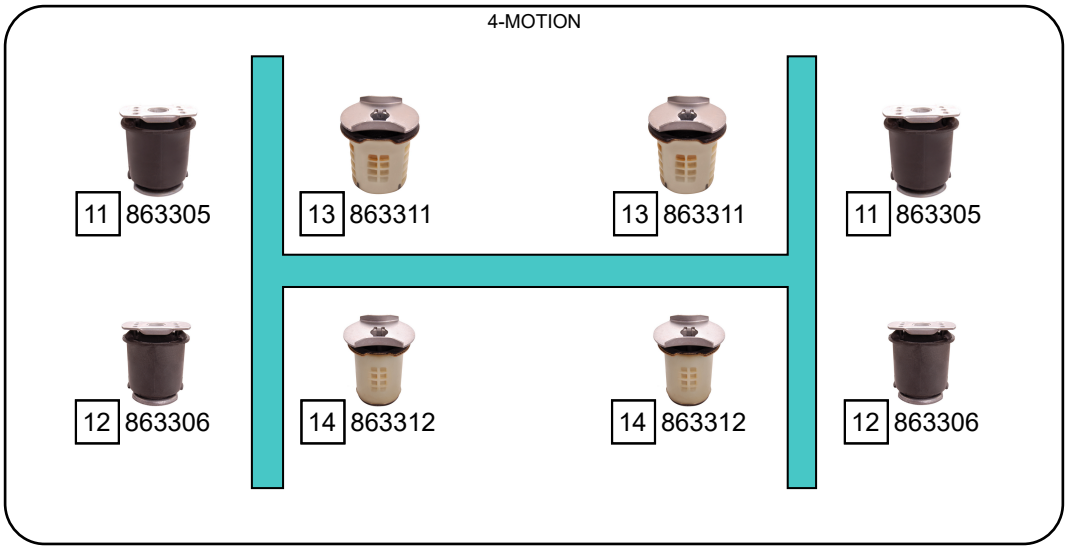

Ref.	Sidem Ref.	Description	OE-number	Measures	Ref.	Sidem Ref.	Description	OE-number	Measures
1	63876	TCA left wbj	1K0 407 151 BC S1	c:15.4	8	863663 KIT	silentblock kit	1K0 199 232 J S1	
2	63877	TCA right wbj	1K0 407 152 BC S2	c:15.4	9	63586	ball joint left	1K0 407 365 C	c:15.4
3	863631	silentblock for TCA	1K0 407 182	di:12.1 do:40 (*)	10	63587	ball joint right	1K0 407 366 C	c:15.4
4	37004	mounting kit	N 910 398 02 S1	th:M10x1.5R	11	863305	mounting axle body	1K0 505 145 J	di:18 do:70
5	863632	silentblock for TCA	1K0 199 231 J	di:18.8 (*)	12	863306	mounting axle body	1K0 505 145 K	di:18 do:70
6	863633	silentblock for TCA	1K0 199 232 J	di:18.8 (*)	13	863311	mounting axle body	5Q0 505 145 F	di:18.2 do:61.5
7	863662 KIT	silentblock kit	1K0 199 231 J S1		14	863312	mounting axle body	5Q0 505 145 E	di:18.6 do:53.5

Copyright 2021

VOLKSWAGEN
GOLF

GOLF VI (5K1)	10/2008 - 11/2013
GOLF VI PLUS (521)	03/2009 - 01/2014
GOLF VI VARIANT (AJ5)	07/2009 - 07/2013
GOLF VI CABRIO (517)	03/2011 - 04/2016

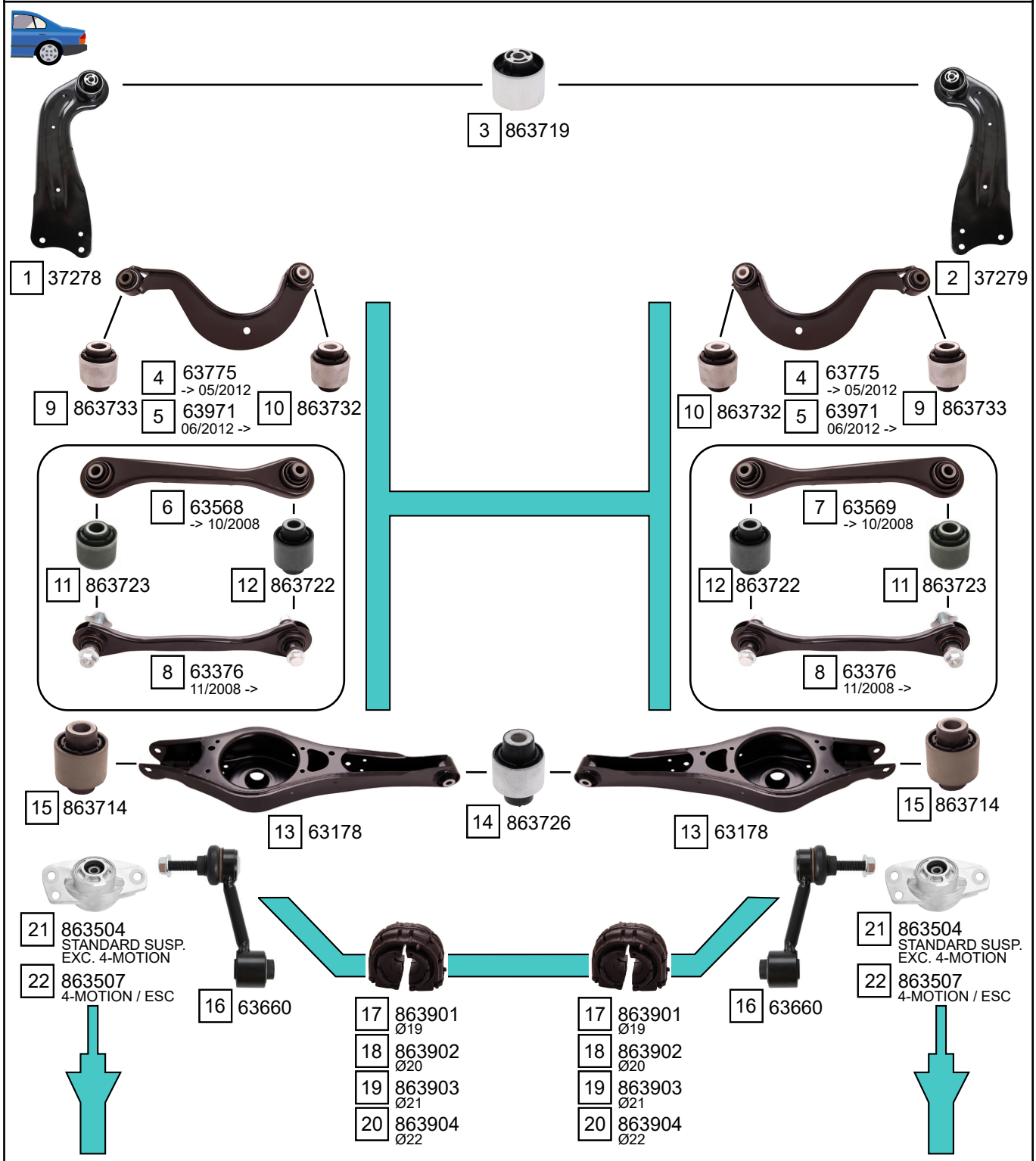

Ref.	Sidem Ref.	description	OE-number	measures	Ref.	Sidem Ref.	description	OE-number	measures
1	37278	TCA left	1K0 505 223 K	L:373	12	863722	silentblock for TCA	Part of	di:12.1 do:40.4 (*)
2	37279	TCA right	1K0 505 224 K	L:373	13	63178	TCA	1K0 505 311 AB	
3	863719	mounting axle body	3C0 505 541	di:12.2 do:60.2 (*)	14	863726	silentblock for TCA	Part of	di:12.1 do:42 (*)
4	63775	track rod	1K0 505 323 N	L:305.5	15	863714	silentblock for TCA	1K0 505 553 A	di:12.2 do:37.4 (*)
5	63971	track rod	5Q0 505 323 C	L:305	16	63660	stabiliser link rear axle	1K0 505 465 K	L:95
6	63568	track rod	1K0 501 529 F	L:298	17	863901	stabiliser mounting	1K0 511 327 AP	di:17
7	63569	track rod	1K0 501 530 C	L:298	18	863902	stabiliser mounting	1K0 511 327 AQ	di:19
8	63376	track rod	1K0 501 529 H	L:298	19	863903	stabiliser mounting	1K0 511 327 AR	di:18.5
9	863733	silentblock for TCA	Part of	di:14.3 do:38.2 (*)	20	863904	stabiliser mounting	1K0 511 327 AS	di:19.5
10	863732	silentblock for TCA	Part of	di:12.1 do:38.3 (*)	21	863504	strut mount	1K0 513 353 G	di:10.5 do:63 L:62
11	863723	silentblock for TCA	Part of	di:14.2 do:40.1 (*)	22	863507	strut mount	3C0 513 353 C	di:10.5 do:68 L:62.7

Copyright 2021

VOLKSWAGEN
GOLF

GOLF VII (5G1, BQ1, BE1, BE2)	11/2012 ->
GOLF VII VARIANT (BA5, BV5)	04/2013 ->
GOLF VII SPORTSVAN (AM1)	02/2014 ->
GOLF VII ALLTRACK (BA5, BV5)	12/2014 ->

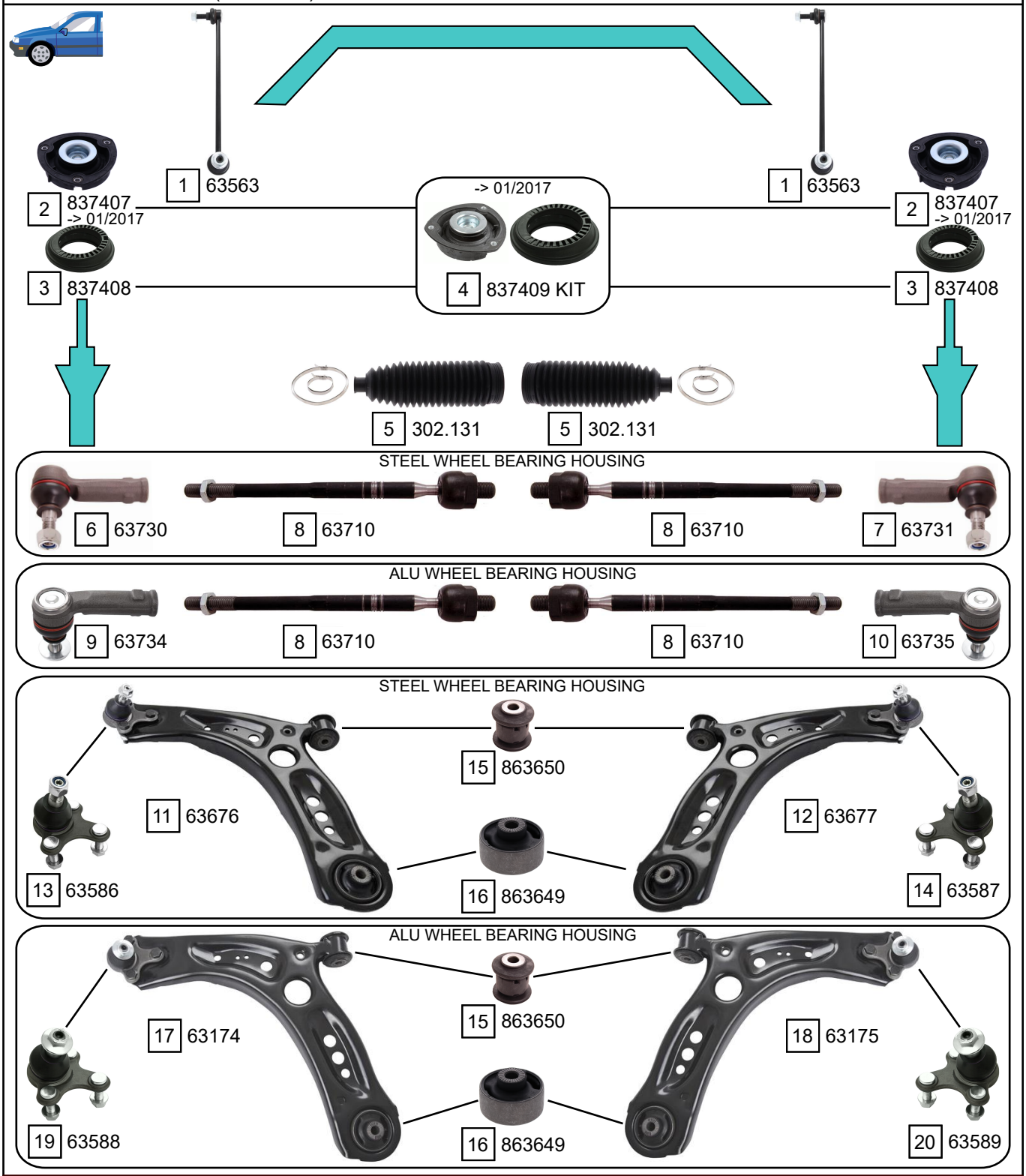

Ref.	Sidem Ref.	Description	OE-number	Measures	Ref.	Sidem Ref.	Description	OE-number	Measures
1	63563	stabiliser link	5Q0 411 315 A	L:335	11	63676	TCA left wbj	5Q0 407 151 J S1	c:15.4
2	837407	strut mount	5Q0 412 331 E	di:14.6 do:64.1 L:42	12	63677	TCA right wbj	5Q0 407 152 J S1	c:15.4
3	837408	bearing	5Q0 412 249 F	di:74 do:127 L:38.6	13	63586	ball joint left	1K0 407 365 C	c:15.4
4	837409 KIT	strut mount kit	5Q0 412 331 E S1	di:14.6 do:127	14	63587	ball joint right	1K0 407 366 C	c:15.4
5	302.131	steering rack gaiter	1K0 423 831 A	D:50 d:15 L:193	15	863650	silentblock for TCA	5Q0 407 182	di:12.1 do:40.1 (*)
6	63730	tie rod end left	1K0 423 811 J S1	c:13.2 th:FM16x1.5R	16	863649	silentblock for TCA	5Q0 407 183 E	di:12.9 do:65 (*)
7	63731	tie rod end right	1K0 423 812 J S1	c:13.2 th:FM16x1.5R	17	63174	TCA left wbj	5Q0 407 151 M S2	c:15.2
8	63710	axial joint	1K0 423 810 A	th:MM16X1.5R L:312	18	63175	TCA right wbj	5Q0 407 152 M S2	c:15.2
9	63734	tie rod end left	1K0 423 811 J S2	c:13.2 th:FM16X1.5R	19	63588	ball joint left	3C0 407 365 B	c:15.2
10	63735	tie rod end right	1K0 423 812 J S2	c:13.2 th:FM16X1.5R	20	63589	ball joint right	3C0 407 366 B	c:15.2

Copyright 2021

VOLKSWAGEN
GOLF

GOLF VII (5G1, BQ1, BE1, BE2)	11/2012 ->
GOLF VII VARIANT (BA5, BV5)	04/2013 ->
GOLF VII SPORTSVAN (AM1)	02/2014 ->
GOLF VII ALLTRACK (BA5, BV5)	12/2014 ->

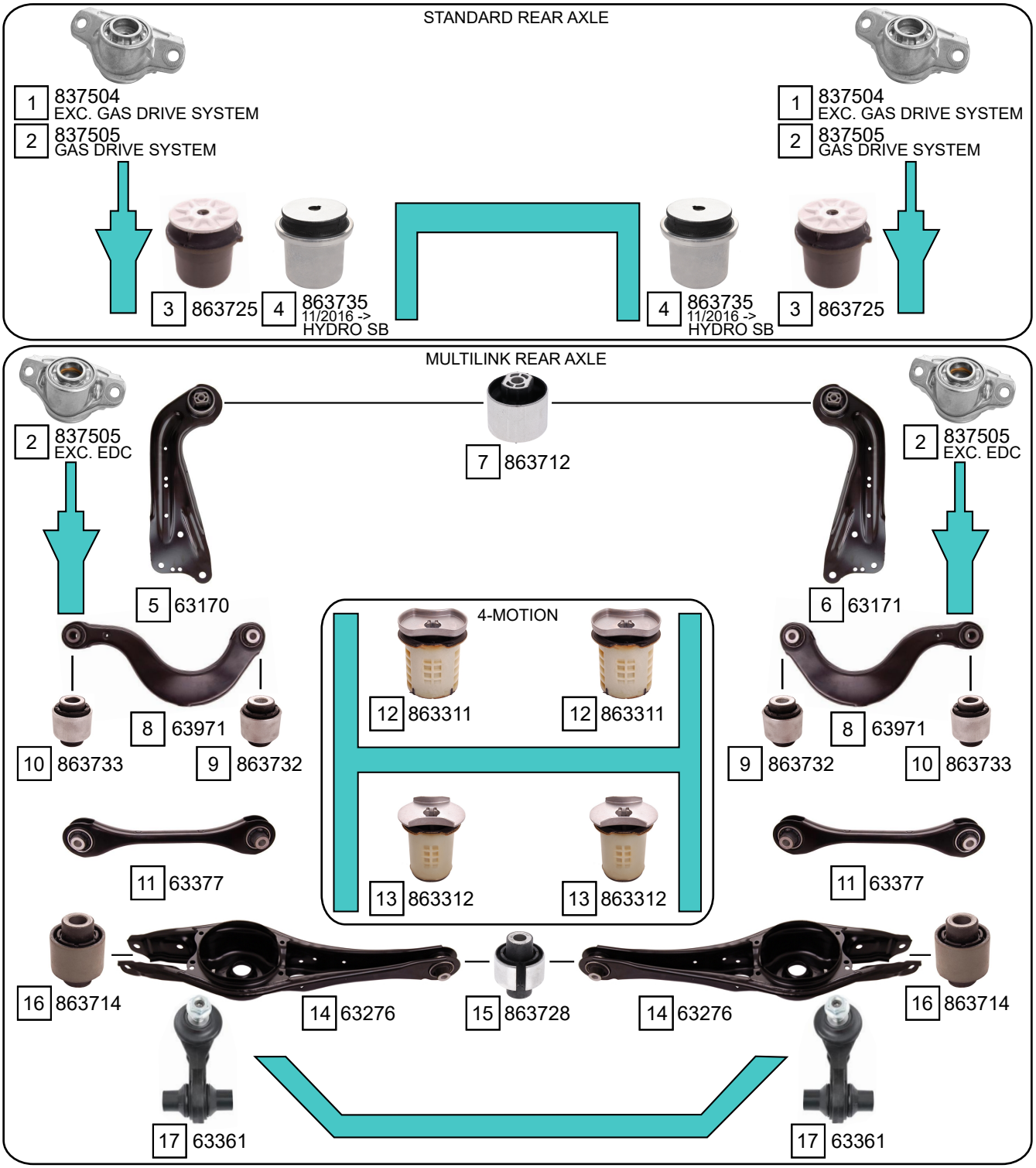

Ref.	Sidem Ref.	Description	OE-number	Measures	Ref.	Sidem Ref.	Description	OE-number	Measures
1	837504	strut mount	5Q0 513 353 H	di:11.2 do:56.5 L:60.7	10	863733	silentblock for TCA	Part of	di:14.3 do:38.2 (*)
2	837505	strut mount	5Q0 513 353 G	di:10.2 do:65.8 L:63.3	11	63377	track rod	5Q0 501 529 F	L:282
3	863725	mounting axle body	5Q0 501 541 C	di:12.5 do:72	12	863311	mounting axle body	5Q0 505 145 F	di:18.2 do:61.5
4	863735	mounting axle body	5Q0 501 541 E	di:12.2 do:70.1	13	863312	mounting axle body	5Q0 505 145 E	di:18.6 do:53.5
5	63170	TCA left	5Q0 505 223 D	L:384	14	63276	TCA	5Q0 505 311 D	
6	63171	TCA right	5Q0 505 224 D	L:384	15	863728	silentblock for TCA	Part of	di:12 do:44.3 (*)
7	863712	silentblock for TCA	1K0 505 541 B	di:12.2 do:60.2 (*)	16	863714	silentblock for TCA	1K0 505 553 A	di:12.2 do:37.4 (*)
8	63971	track rod	5Q0 505 323 C	L:305	17	63361	stabiliser link rear axle	5Q0 505 465 C	L:70
9	863732	silentbloc for TCA	Part of	di:12.1 do:38.3 (*)					

Copyright 2021

VOLKSWAGEN
GOLF

GOLF VIII (CD1) 07/2019 ->
GOLF VIII VARIANT (CD1) 08/2020 ->

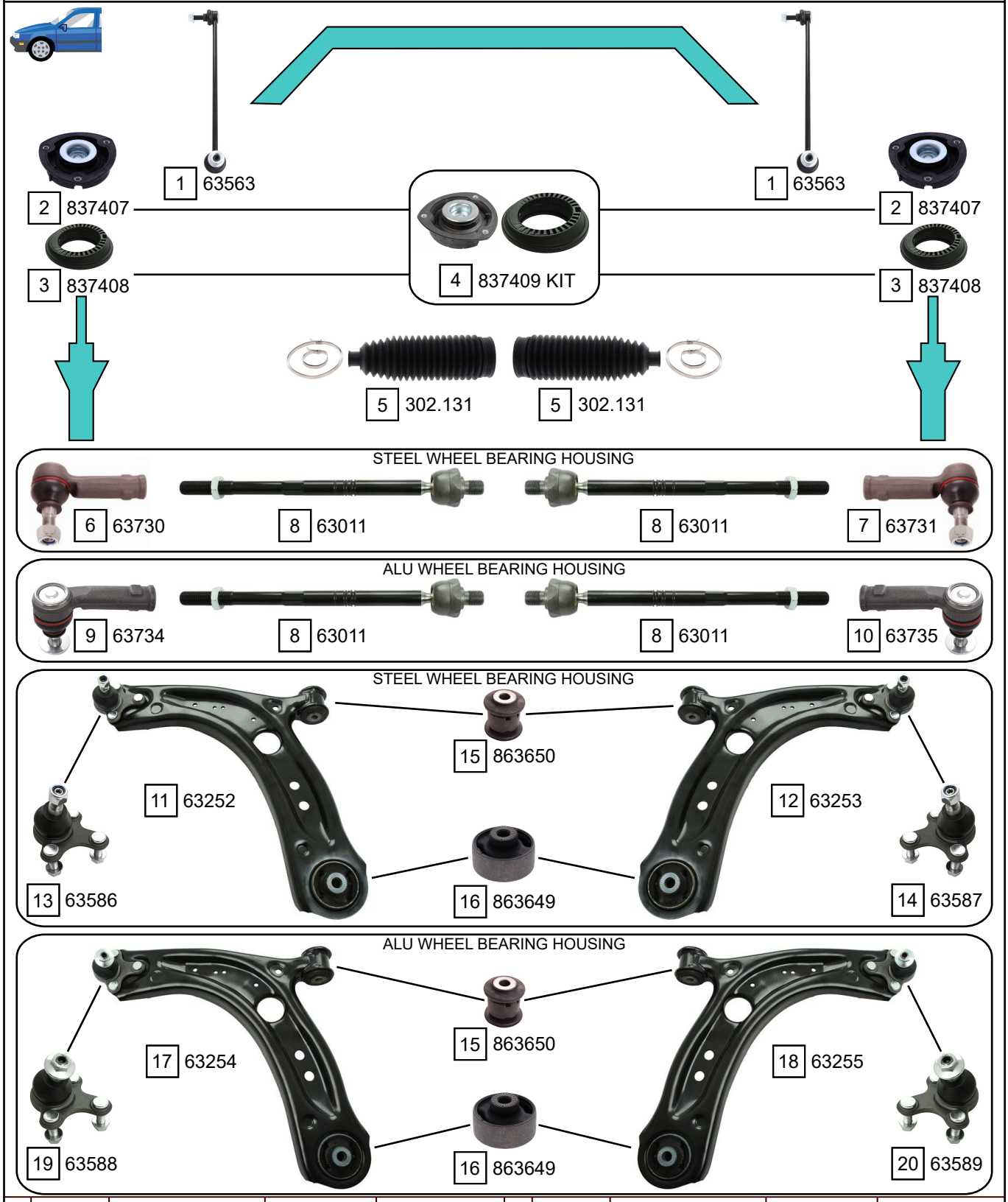

Ref.	Sidem Ref.	Description	OE-number	Measures	Ref.	Sidem Ref.	Description	OE-number	Measures
1	63563	stabiliser link	5Q0 411 315 A	L:335	12	63253	TCA right wbj	5WA 407 152 S1	c:15.4
2	837407	strut mount	5Q0 412 331 E	di:14.6 do:64.1 L:42	13	63586	ball joint left	1K0 407 365 C	c:15.4
3	837408	bearing	5Q0 412 249 F	di:74 do:127 L:38.6	14	63587	ball joint right	1K0 407 366 C	c:15.4
4	837409 KIT	strut mount kit	5Q0 412 331 E S1	di:14.6 do:127	15	863650	silentblock for TCA	5Q0 407 182	di:12.1 do:40.1 (*)
5	302.131	steering rack gaiter	1K0 423 831 A	D:50 d:15 L:193	16	863649	silentblock for TCA	5Q0 407 183 E	di:12.9 do:65 (*)
6	63730	tie rod end left	1K0 423 811 J S1	c:13.2 th:FM16x1.5R	17	63254	TCA left wbj	5WA 407 151 S2	c:15.2
7	63731	tie rod end right	1K0 423 812 J S1	c:13.2 th:FM16x1.5R	18	63255	TCA right wbj	5WA 407 152 S2	c:15.2
9	63734	tie rod end left	1K0 423 811 J S2	c:13.2 th:FM16X1.5R	19	63588	ball joint left	3C0 407 365 B	c:15.2
10	63735	tie rod end right	1K0 423 812 J S2	c:13.2 th:FM16X1.5R	20	63589	ball joint right	3C0 407 366 B	c:15.2
11	63252	TCA left wbj	5WA 407 151 S1	c:15.4					

Copyright 2021

VOLKSWAGEN
GOLF

GOLF VIII (CD1) 07/2019 ->
GOLF VIII VARIANT (CD1) 08/2020 ->

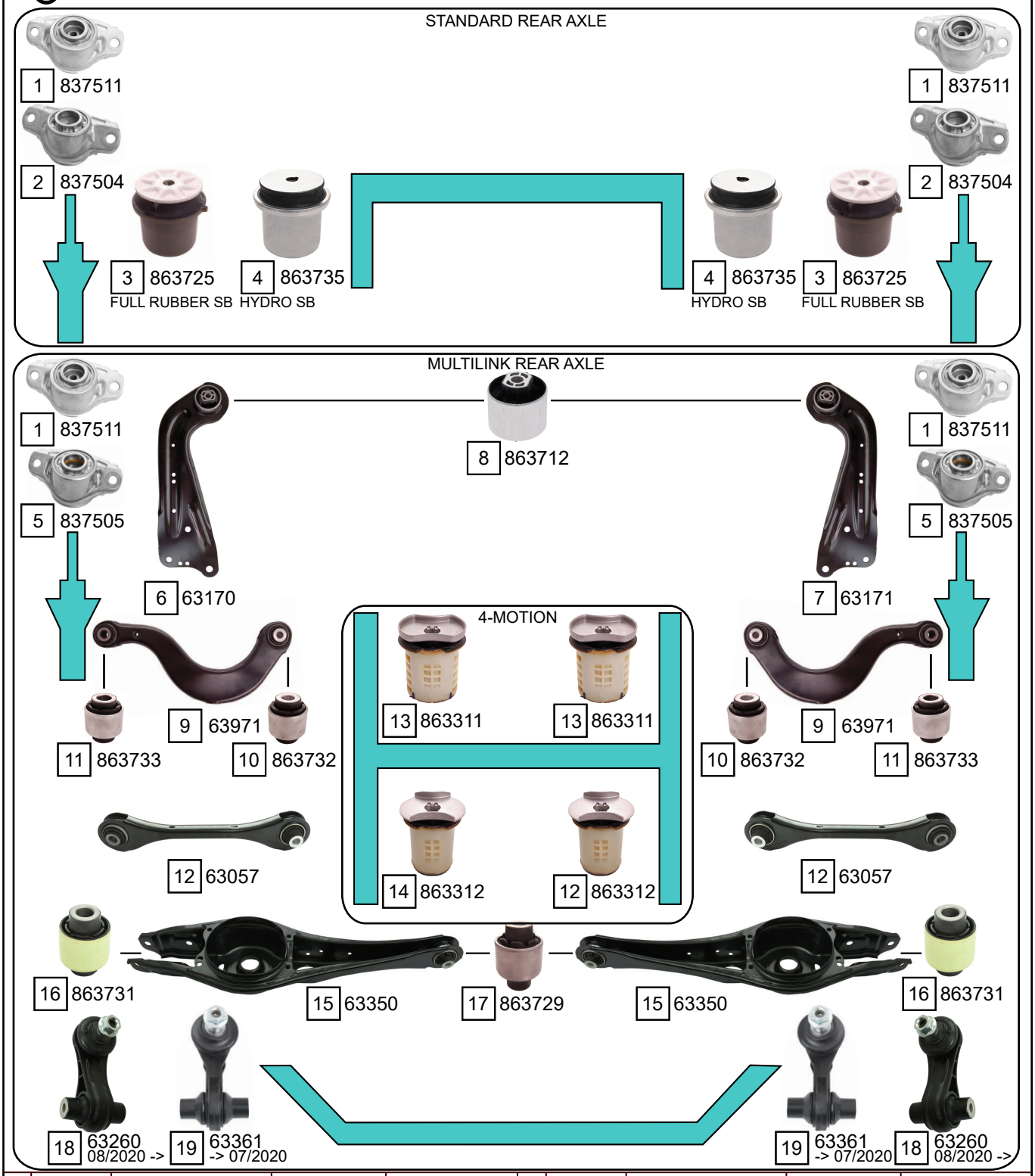

Ref.	Sidem Ref.	Description	OE-number	Measures	Ref.	Sidem Ref.	Description	OE-number	Measures
1	837511	strut mount	5Q0 513 353 K	di:10.2 do:65.8 L:63.3	11	863733	silentblock for TCA	Part of	di:14.3 do:38.2 (*)
2	837504	strut mount	5Q0 513 353 H	di:11.2 do:56.5 L:60.7	12	63057	track rod	5Q0 501 529 G	L:282
3	863725	mounting axle body	5Q0 501 541 C	di:12.5 do:72	13	863311	mounting axle body	5Q0 505 145 F	di:18.2 do:61.5
4	863735	mounting axle body	5Q0 501 541 E	di:12.2 do:70.1	14	863312	mounting axle body	5Q0 505 145 E	di:18.6 do:53.5
5	837505	strut mount	5Q0 513 353 G	di:10.2 do:65.8 L:63.3	15	63350	TCA	5WA 505 311 A	
6	63170	TCA left	5Q0 505 223 D	L:384	16	863731	silentblock for TCA	5Q0 505 553	di:12.1 do:37.4 (*)
7	63171	TCA right	5Q0 505 224 D	L:384	17	863729	silentblock for TCA	Part of	di:12.1 do:44.3 (*)
8	863712	silentblock for TCA	1K0 505 541 B	di:12.2 do:60.2 (*)	18	63260	stabiliser link rear axle	5WA 505 465 A	L:70
9	63971	track rod	5Q0 505 323 C	L:305	19	63361	stabiliser link rear axle	5Q0 505 465 C	L:70
10	863732	silentblock for TCA	Part of	di:12.1 do:38.3 (*)					

Copyright 2021

VOLKSWAGEN
JETTA

JETTA I (16) 08/1979 - 01/1985

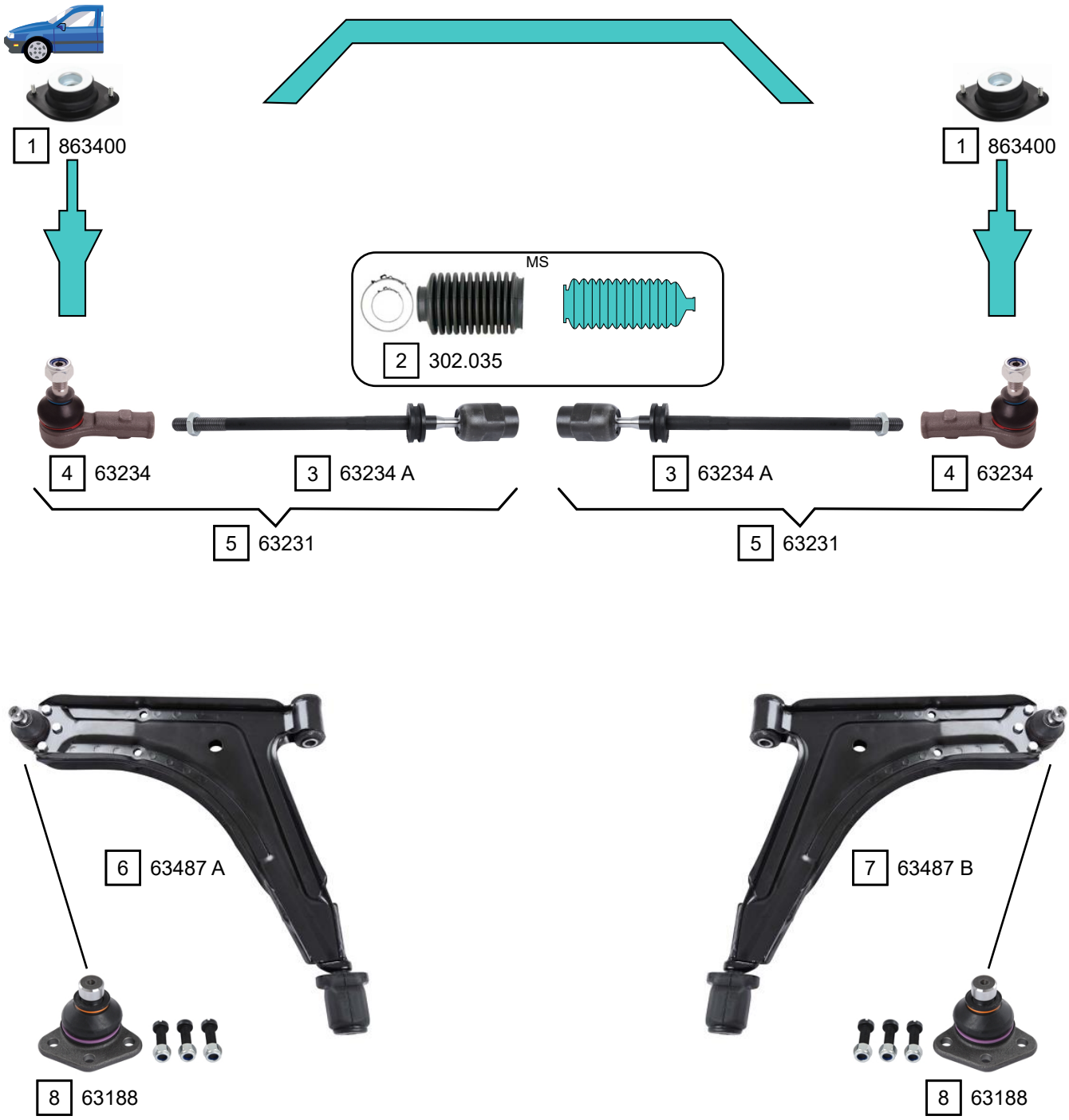

Ref.	Sidem Ref.	Description	OE-number	Measures	Ref.	Sidem Ref.	Description	OE-number	Measures
1	863400	strut mount	171 412 329 A	di:14.2 do:81.5 L:53	5	63231	tie rod	171 419 804	c:12.6
2	302.035	steering rack gaiter	191 419 831	D:41 d:25 L:120	6	63487 A	TCA left wbj	171 407 153 D S1	c:17
3	63234 A	axial joint	Part of	th:FM22X1.5R L:340	7	63487 B	TCA right wbj	171 407 153 D S2	c:17
4	63234	tie rod end	171 419 812	c:12.6 th:FM14x1.5R	8	63188	ball joint lower	171 407 365 G	c:17

Copyright 2021

VOLKSWAGEN
JETTA

JETTA II (19E, 1G2) 01/1984 - 02/1992

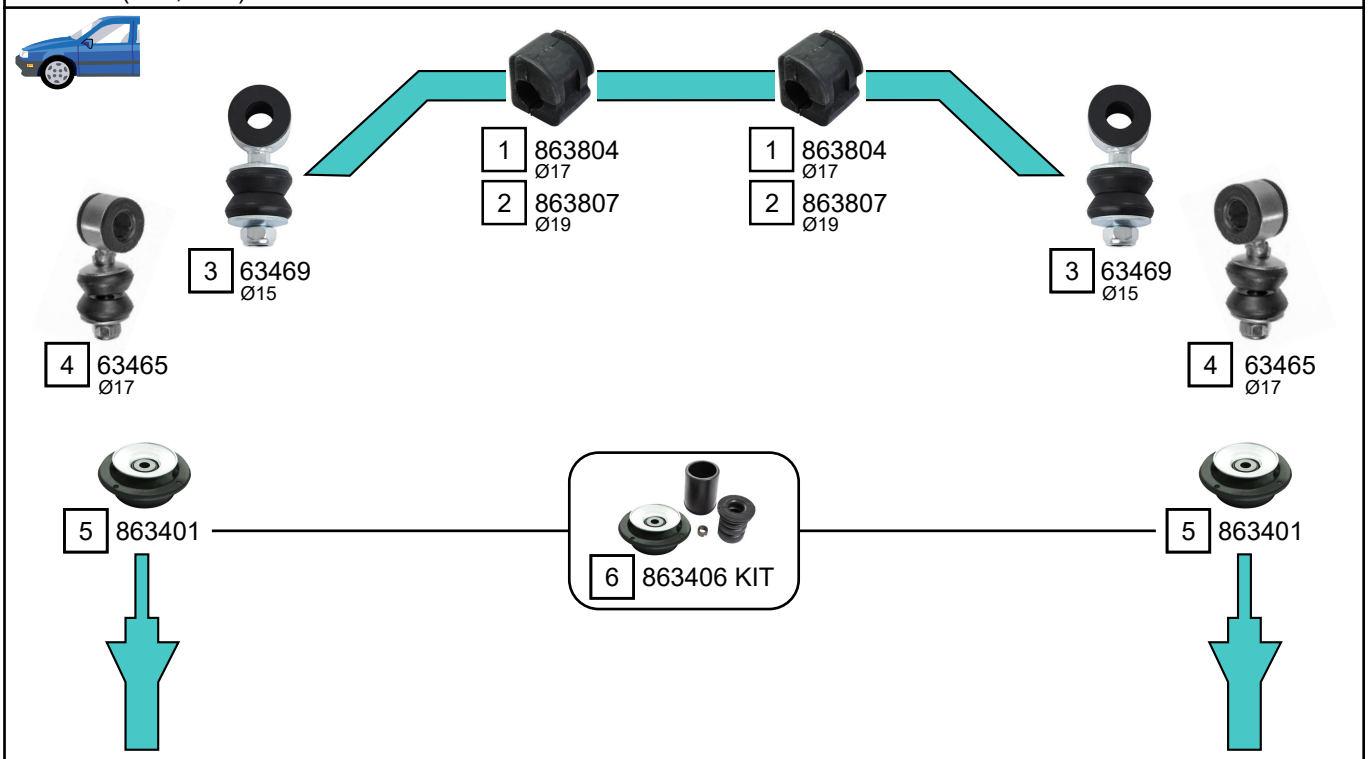

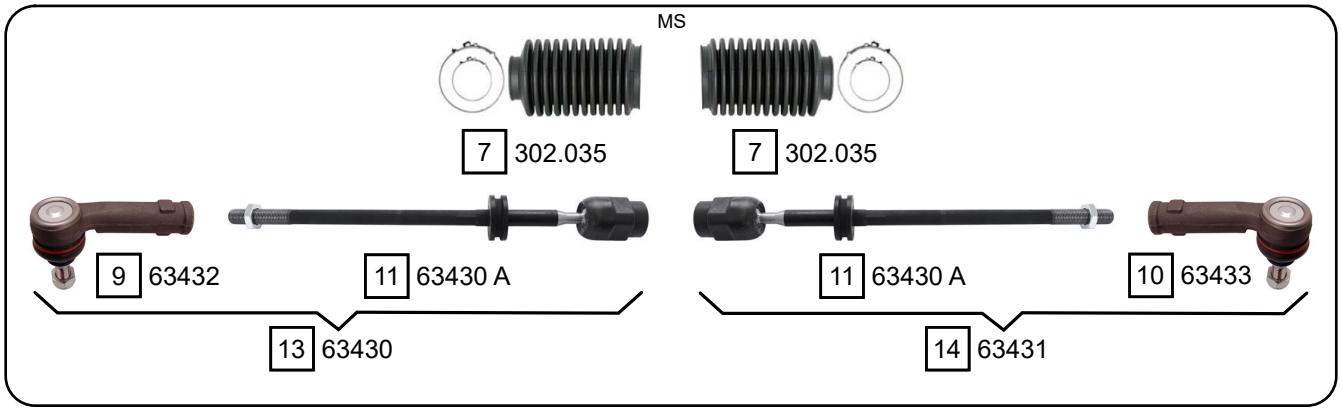

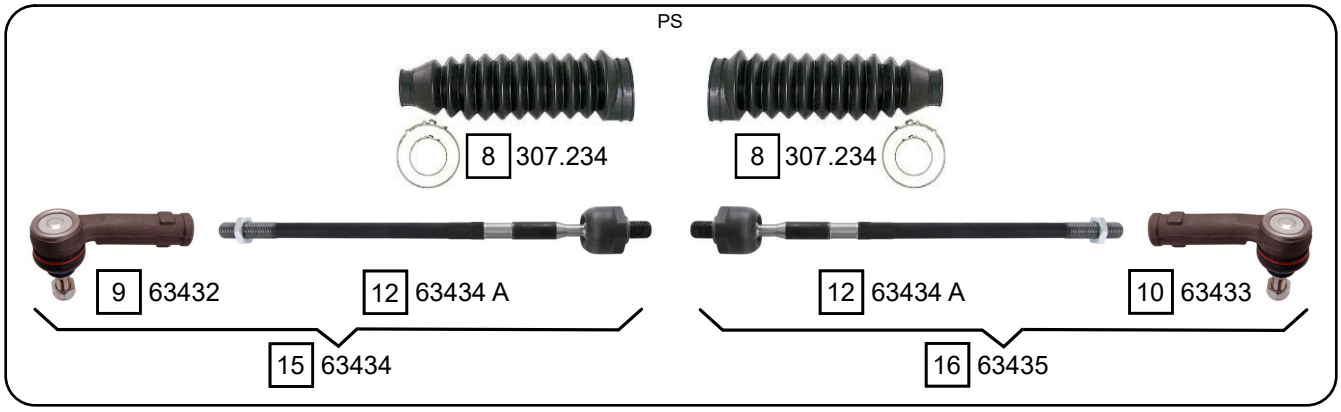

Ref.	Sidem Ref.	Description	OE-number	Measures	Ref.	Sidem Ref.	Description	OE-number	Measures
1	863804	stabiliser mounting	191 411 314	di:17	9	63432	tie rod end left	6N0 419 811	c:12.6 th:FM14x1.5R
2	863807	stabiliser mounting	1H0 411 314	di:19	10	63433	tie rod end right	6N0 422 812	c:12.6 th:FM14x1.5R
3	63469	stabiliser link	191 411 315 B	L:76	11	63430 A	axial joint	Part of	th:FM22X1.5R L:365
4	63465	stabiliser link	6K0 411 315	L:78	12	63434 A	axial joint	Part of	th:MM14X1.5R L:341
5	863401	strut mount	191 412 329	di:14.5 do:89.3 L:52	13	63430	tie rod left	191 419 803	c:12.6
6	863406 KIT	strut mount kit	191 412 329 S1	di:14.5 do:127 L:53	14	63431	tie rod right	191 419 804	c:12.6
7	302.035	steering rack gaiter	191 419 831	D:41 d:25 L:120	15	63434	tie rod left	191 422 803 A	c:12.6
8	307.234	steering rack gaiter	1H0 422 831 B	D:41 d:10 L:210	16	63435	tie rod right	191 422 804 A	c:12.6

Copyright 2021

JETTA II (19E, 1G2) 01/1984 - 02/1992

-> CHAS 19-H-999999

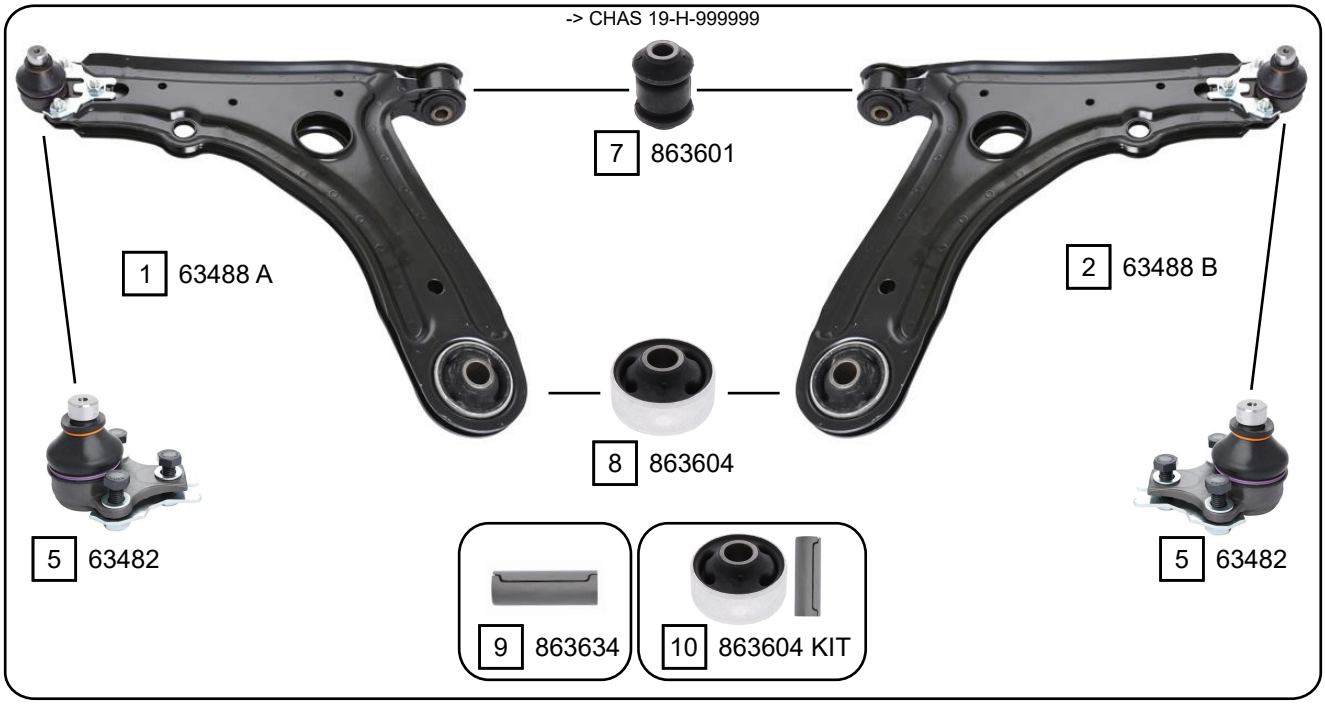

CHAS 19-J-000001 ->

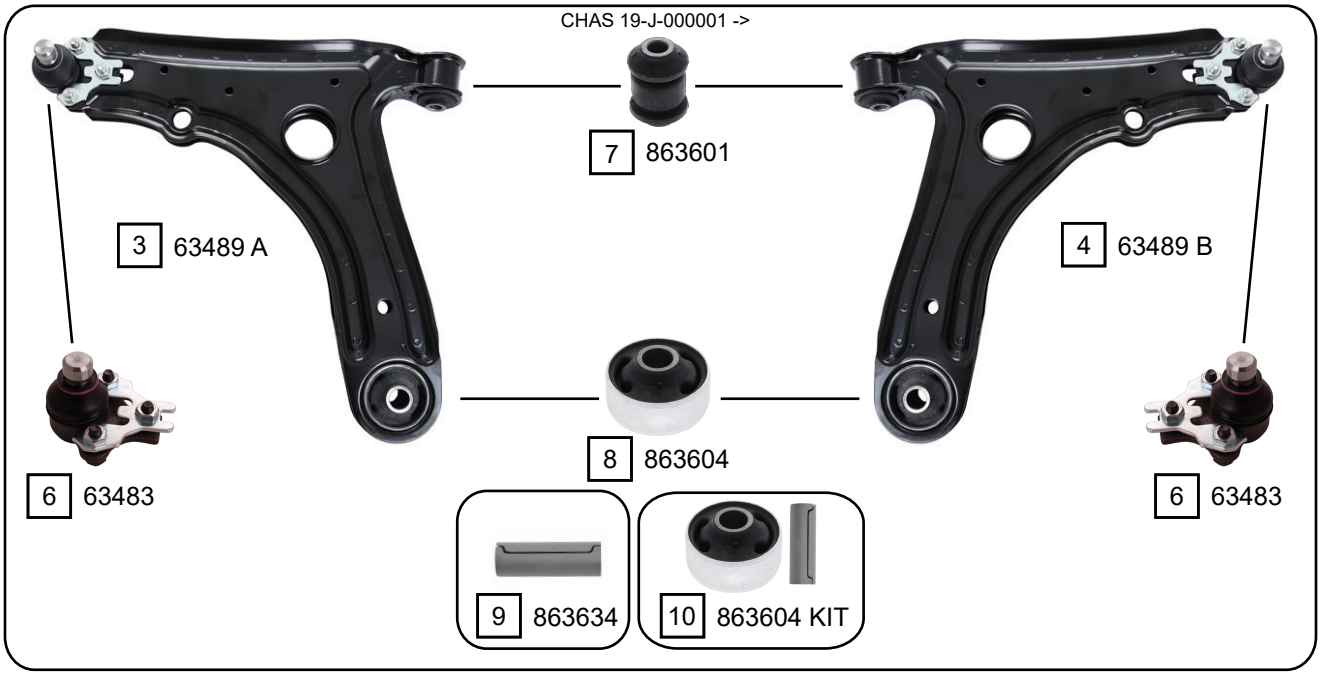

Ref.	Sidem Ref.	Description	OE-number	Measures	Ref.	Sidem Ref.	Description	OE-number	Measures
1	63488 A	TCA left wbj	191 407 151 B S1	c:17	6	63483	ball joint lower	357 407 365 A	c:19
2	63488 B	TCA right wbj	191 407 151 B S2	c:17	7	863601	silentblock for TCA	357 407 182	di:12 do:32.6 (*)
3	63489 A	TCA left wbj	191 407 151 B S1	c:19	8	863604	silentblock for TCA	191 407 181 D	di:17 do:60.1 (*)
4	63489 B	TCA right wbj	191 407 151 B S2	c:19	9	863634	sleeve	191 407 190 A	di:15.8 do:17.2
5	63482	ball joint lower	191 407 365 B	c:17	10	863604 KIT	silentblock for TCA + sleeve	191 407 181 E S1	di:17 do:60.1 (*)

Copyright 2021

VOLKSWAGEN
JETTA

JETTA II (19E, 1G2) 01/1984 - 02/1992

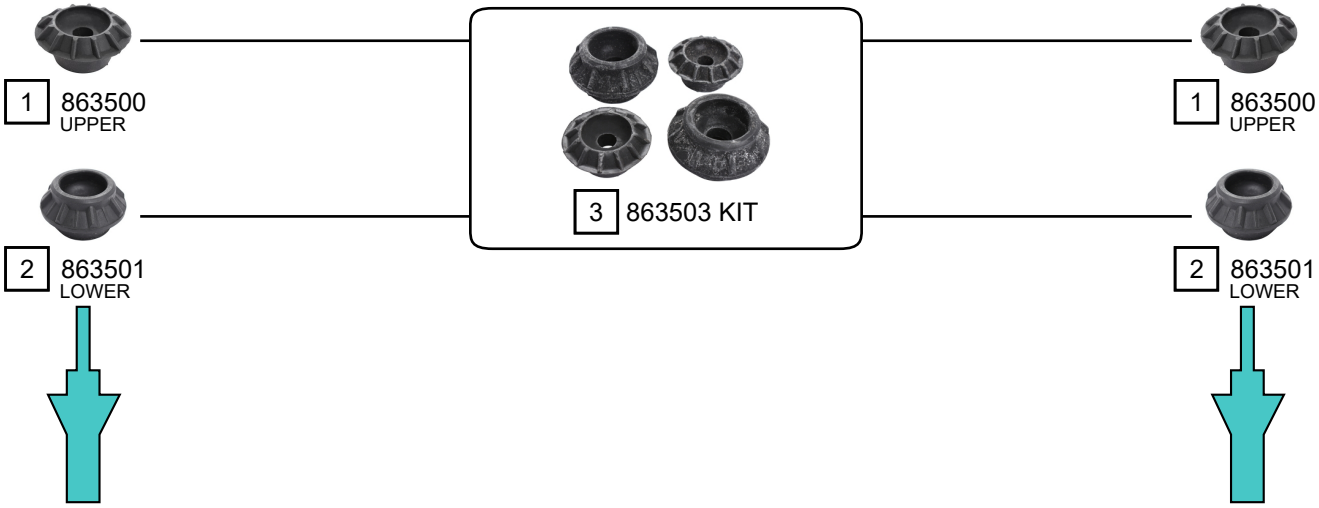

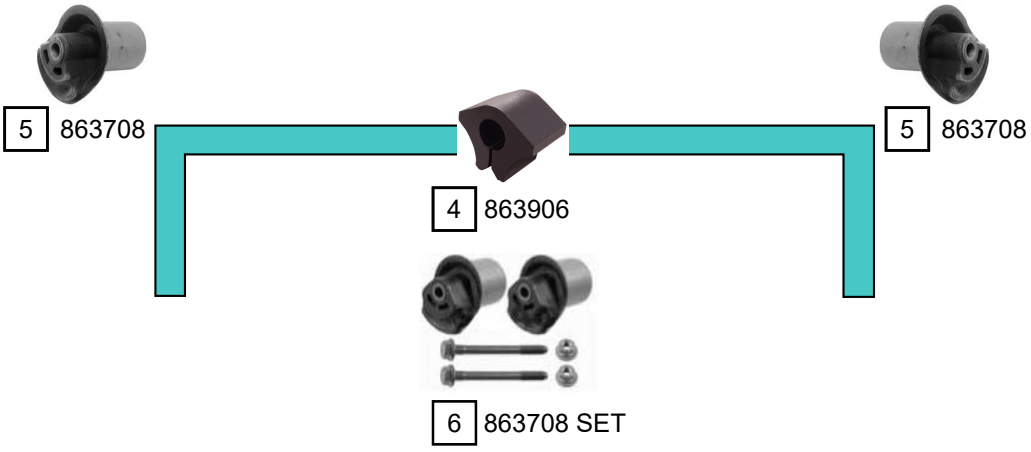

Ref.	Sidem Ref.	Description	OE-number	Measures	Ref.	Sidem Ref.	Description	OE-number	Measures
1	863500	strut mount	191 512 335	di:13.5 do:59 L:27.5	4	863906	stabiliser mounting	871 511 423	di:16.5
2	863501	strut mount	191 512 333	di:17.5 do:70 L:40	5	863708	mounting axle body	191 501 541	di:12.2 do:44.4
3	863503 KIT	strut mount kit	191 512 335 S1	di:13.5	6	863708 SET	mounting axle body set	191 501 541 S1	di:12.2 do:44.4

Copyright 2021

VOLKSWAGEN
JETTA

JETTA III (1K2) 09/2005 - 10/2010

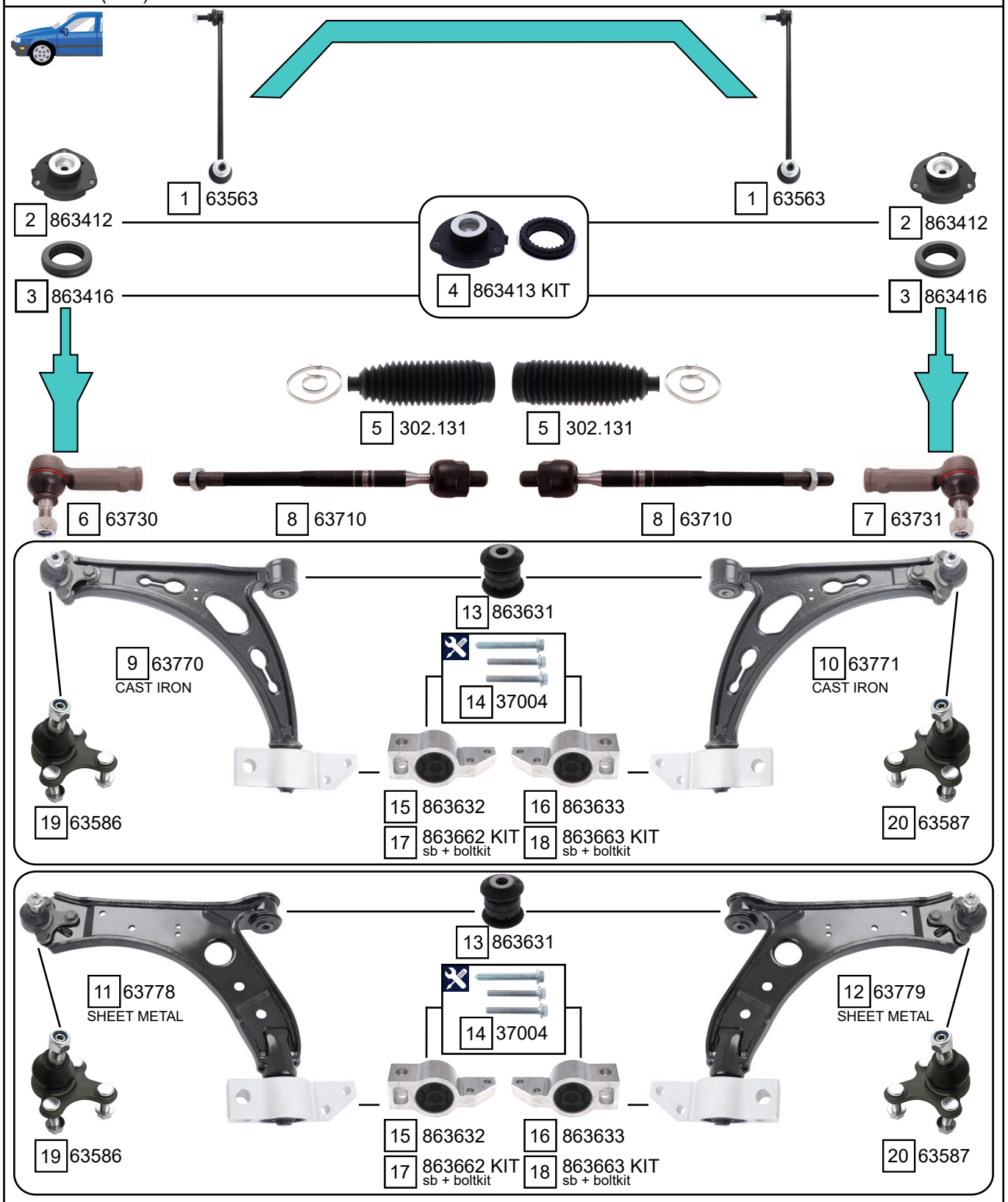

Ref.	Sidem Ref.	Description	OE-number	Measures	Ref.	Sidem Ref.	Description	OE-number	Measures
1	63563	stabiliser link	5Q0 411 315 A	L:335	11	63778	TCA left wbj	1K0 407 151 AA S1	c:15.4
2	863412	strut mount	1K0 412 331 B	di:14.2 L:49.5	12	63779	TCA right wbj	1K0 407 152 AA S2	c:15.4
3	863416	bearing	1K0 412 249 B	di:68.5 do:112 L:25.5	13	863631	silentblock for TCA	1K0 407 182	di:12.1 do:40 (*)
4	863413 KIT	strut mount kit	1K0 412 331 B S1	di:14.2 L:50	14	37004	mounting kit	N 910 398 02 S1	th:M10x1.5R
5	302.131	steering rack gaiter	1K0 423 831 A	D:50 d:15 L:193	15	863632	silentblock for TCA	1K0 199 231 J	di:18.8 (*)
6	63730	tie rod end left	1K0 423 811 J S1	c:13.2 th:FM16x1.5R	16	863633	silentblock for TCA	1K0 199 232 J	di:18.8 (*)
7	63731	tie rod end right	1K0 423 812 J S1	c:13.2 th:FM16x1.5R	17	863662 KIT	silentblock kit	1K0 199 231 J S1	
8	63710	axial joint	1K0 423 810 A	th:MM16X1.5R L:312	18	863663 KIT	silentblock kit	1K0 199 232 J S1	
9	63770	TCA left wbj	1K0 407 151 AC	c:15.4	19	63586	ball joint left	1K0 407 365 C	c:15.4
10	63771	TCA right wbj	1K0 407 152 AC	c:15.4	20	63587	ball joint right	1K0 407 366 C	c:15.4

Copyright 2021

VOLKSWAGEN
JETTA

JETTA III (1K2) 09/2005 - 10/2010

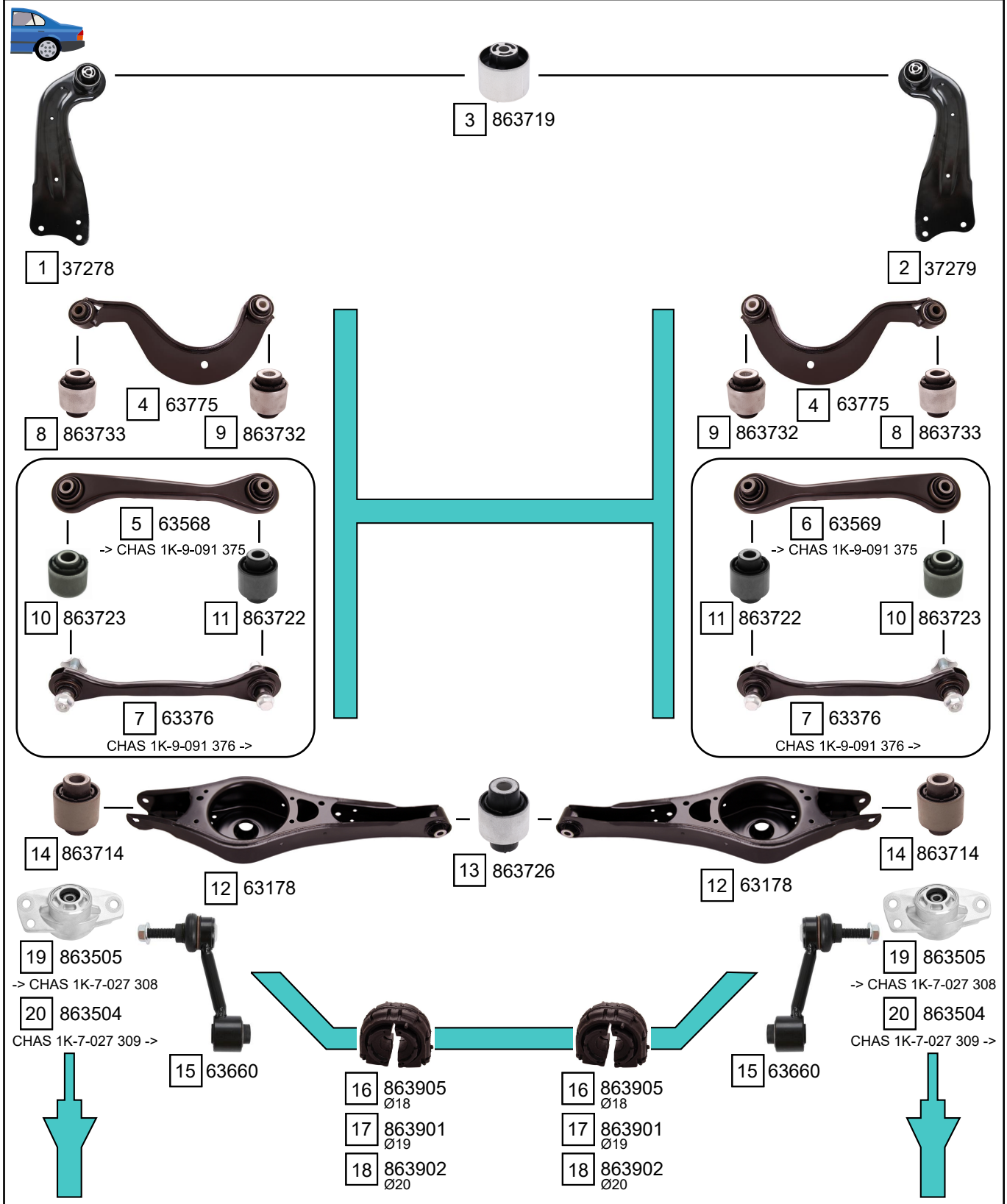

Ref.	Sidem Ref.	Description	OE-number	Measures	Ref.	Sidem Ref.	Description	OE-number	Measures
1	37278	TCA left	1K0 505 223 K	L:373	11	863722	silentblock for TCA	Part of	di:12.1 do:40.4 (*)
2	37279	TCA right	1K0 505 224 K	L:373	12	63178	TCA	1K0 505 311 AB	
3	863719	mounting axle body	3C0 505 541	di:12.2 do:60.2 (*)	13	863726	silentblock for TCA	Part of	di:12.1 do:42 (*)
4	63775	track rod	1K0 505 323 N	L:305.5	14	863714	silentblock for TCA	1K0 505 553 A	di:12.2 do:37.4 (*)
5	63568	track rod	1K0 501 529 F	L:298	15	63660	stabiliser link rear axle	1K0 505 465 K	L:95
6	63569	track rod	1K0 501 530 C	L:298	16	863905	stabiliser mounting	1K0 511 327 BA	di:15
7	63376	track rod	1K0 501 529 H	L:298	17	863901	stabiliser mounting	1K0 511 327 AP	di:17
8	863733	silentblock for TCA	Part of	di:14.3 do:38.2 (*)	18	863902	stabiliser mounting	1K0 511 327 AQ	di:19
9	863732	silentblock for TCA	Part of	di:12.1 do:38.3 (*)	19	863505	strut mount	1K0 513 353 H	di:10.4 L:62
10	863723	silentblock for TCA	Part of	di:14.2 do:40.1 (*)	20	863504	strut mount	1K0 513 353 G	di:10.5 do:63 L:62

Copyright 2021

VOLKSWAGEN
JETTA

JETTA IV (162, 163) 04/2010 ->

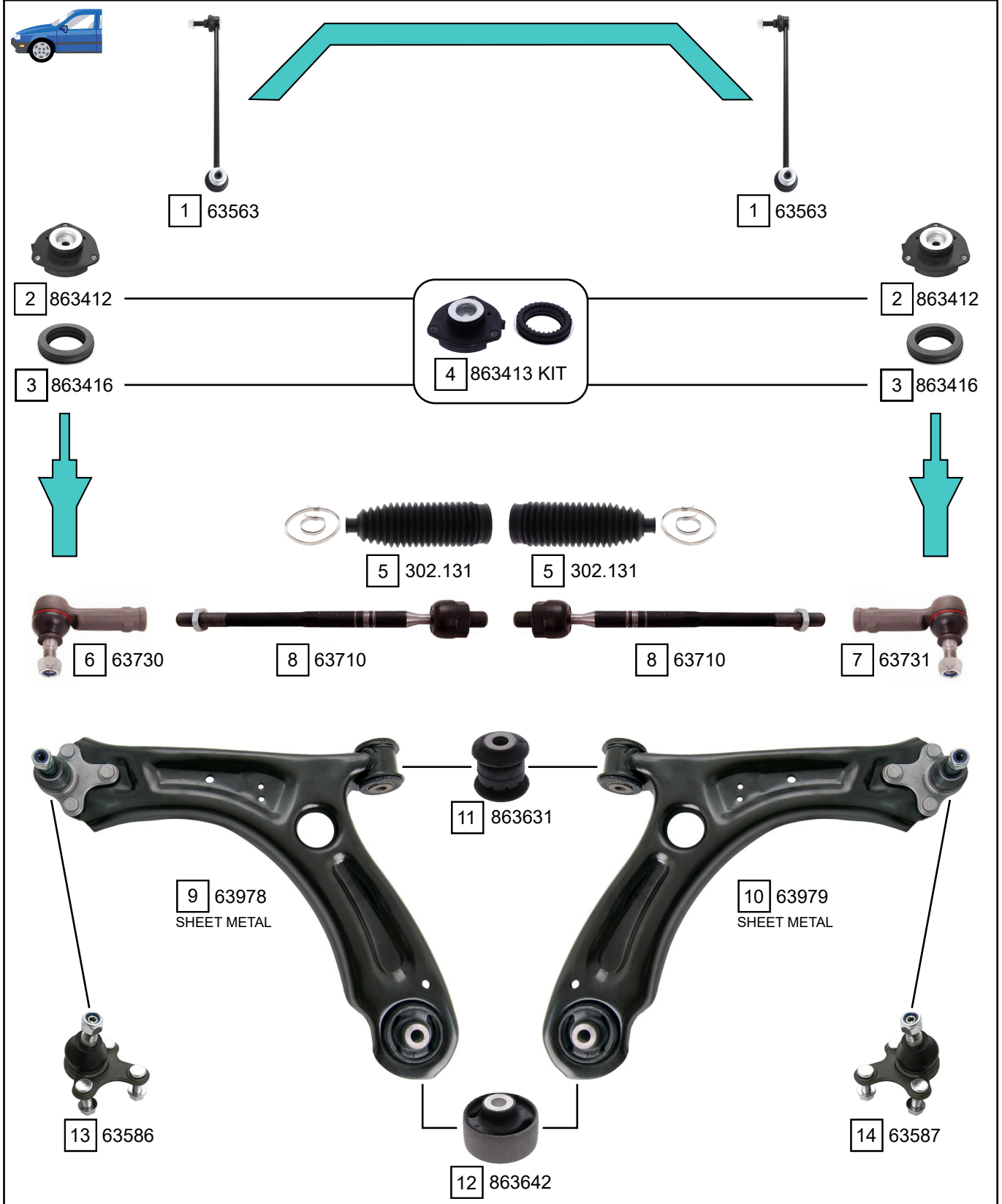

Ref.	Sidem Ref.	Description	OE-number	Measures	Ref.	Sidem Ref.	Description	OE-number	Measures
1	63563	stabiliser link	5Q0 411 315 A	L:335	8	63710	axial joint	1K0 423 810 A	th:MM16X1.5R L:312
2	863412	strut mount	1K0 412 331 B	di:14.2 L:49.5	9	63978	TCA left wbj	5C0 407 151 B S1	c:15.4
3	863416	bearing	1K0 412 249 B	di:68.5 do:112 L:25.5	10	63979	TCA right wbj	5C0 407 151 B S2	c:15.4
4	863413 KIT	strut mount kit	1K0 412 331 B S1	di:14.2 L:50	11	863631	silentblock for TCA	1K0 407 182	di:12.1 do:40 (*)
5	302.131	steering rack gaiter	1K0 423 831 A	D:50 d:15 L:193	12	863642	silentblock for TCA	1K0 407 183 M	di:13.4 do:65 (*)
6	63730	tie rod end left	1K0 423 811 J S1	c:13.2 th:FM16x1.5R	13	63586	ball joint left	1K0 407 365 C	c:15.4
7	63731	tie rod end right	1K0 423 812 J S1	c:13.2 th:FM16x1.5R	14	63587	ball joint right	1K0 407 366 C	c:15.4

Copyright 2021

VOLKSWAGEN
JETTA

JETTA IV (162, 163) 04/2010 ->

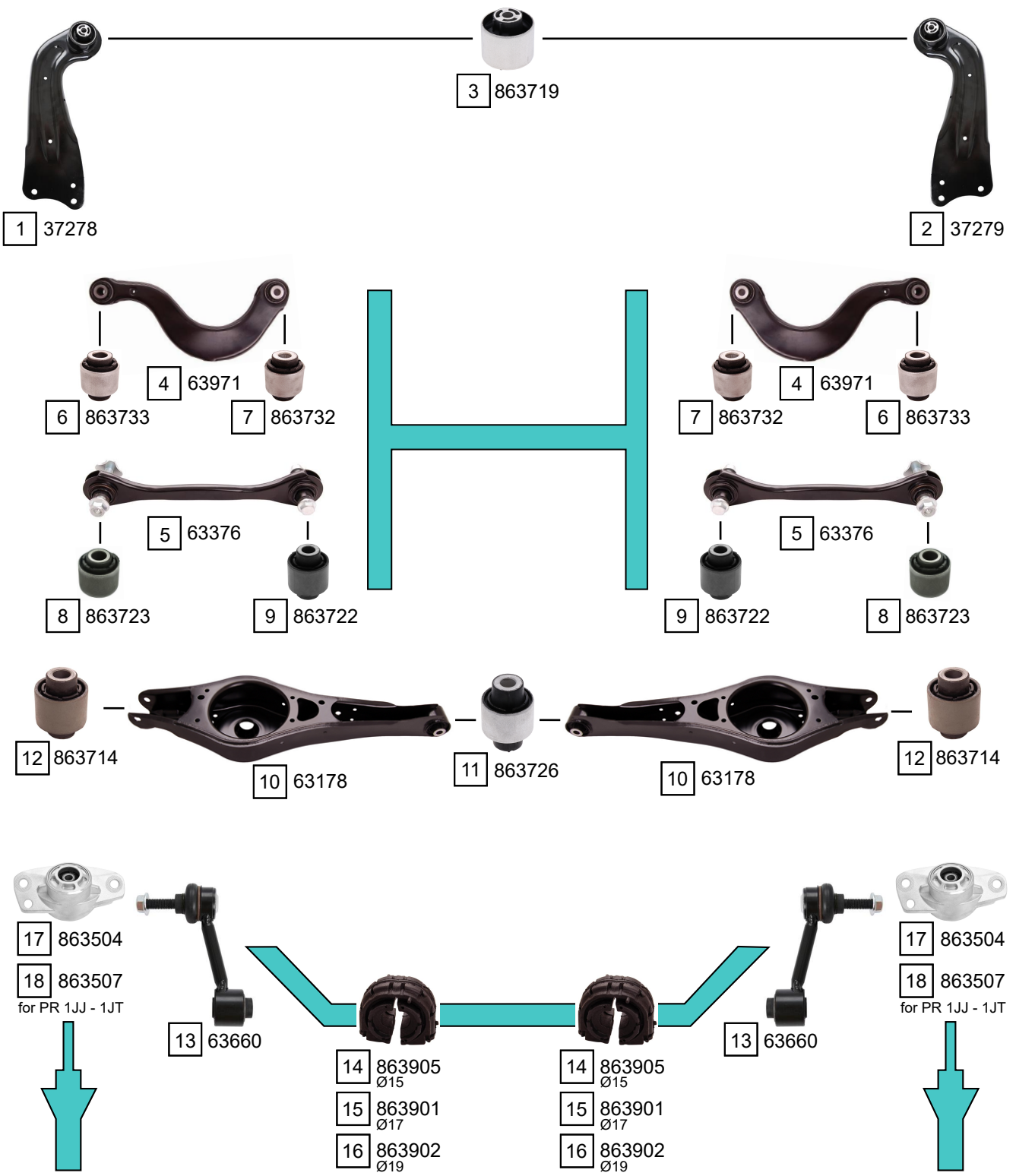

Ref.	Sidem Ref.	Description	OE-number	Measures	Ref.	Sidem Ref.	Description	OE-number	Measures
1	37278	TCA left	1K0 505 223 K	L:373	10	63178	TCA	1K0 505 311 AB	
2	37279	TCA right	1K0 505 224 K	L:373	11	863726	silentblock for TCA	Part of	di:12.1 do:42 (*)
3	863719	mounting axle body	3C0 505 541	di:12.2 do:60.2 (*)	12	863714	silentblock for TCA	1K0 505 553 A	di:12.2 do:37.4 (*)
4	63971	track rod	5Q0 505 323 C	L:305	13	63660	stabiliser link rear axle	1K0 505 465 K	L:95
5	63376	track rod	1K0 501 529 H	L:298	14	863905	stabiliser mounting	1K0 511 327 BA	di:15
6	863733	silentblock for TCA	Part of	di:14.3 do:38.2 (*)	15	863901	stabiliser mounting	1K0 511 327 AP	di:17
7	863732	silentblock for TCA	Part of	di:12.1 do:38.3 (*)	16	863902	stabiliser mounting	1K0 511 327 AQ	di:19
8	863723	silentblock for TCA	Part of	di:14.2 do:40.1 (*)	17	863504	strut mount	1K0 513 353 G	di:10.5 do:63 L:62
9	863722	silentblock for TCA	Part of	di:12.1 do:40.4 (*)	18	863507	strut mount	3C0 513 353 C	di:10.5 do:68 L:62.7

Copyright 2021

VOLKSWAGEN
KAEFER

KAEFER 1.1/1.2/1.3/1.5/1.6 — 08/1965 - 12/1985

2 63035

4 63039

3 63038

1 63034

5 63082

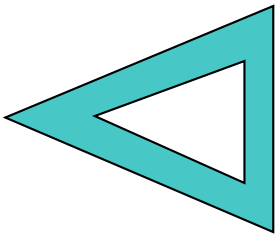

UPPER

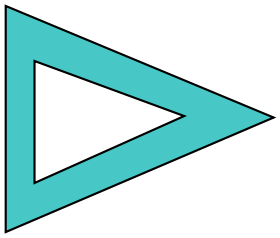

5 63082

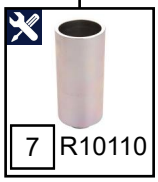

7 R10110

7 R10110

6 63083

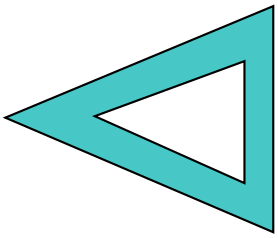

LOWER

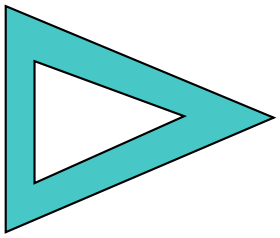

6 63083

8 R10079

8 R10079

Ref.	Sidem Ref.	Description	OE-number	Measures	Ref.	Sidem Ref.	Description	OE-number	Measures
1	63034	tie rod end right	311 415 812 B	c:12.7 th:MM14X1.5R	5	63082	ball joint upper	131 405 361 F	c:13.8 do:38.3
2	63035	tie rod end left	311 415 811 B	c:12.7 th:MM14X1.5L	6	63083	ball joint lower	131 405 371 J	c:14.6 do:38.5
3	63038	tie rod end inner right	131 415 813 D	c:12.6 th:MM14x1.5L	7	R10110	mounting tool ring long ø50	SEE PAGE III	di:42 do:50
4	63039	tie rod end inner left	131 415 821 A	c:12.7 th:MM14X1.5R	8	R10079	mounting tool ring ø46 ø38	SEE PAGE III	di:38 do:46

Copyright 2021

VOLKSWAGEN
LT

LT 28-31-35 I (281-363) 04/1975 - 06/1996

CHAS 28-D-004-508 ->

1 64136

2 64137

3 64139

4 64138

UPPER

6 64085

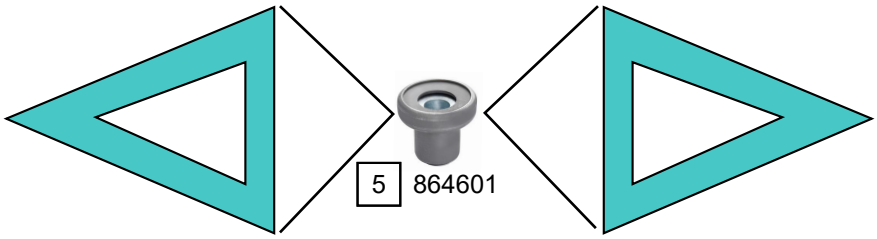

5 864601

6 64085

LOWER

7 64084

7 64084

Ref.	Sidem Ref.	Description	OE-number	Measures	Ref.	Sidem Ref.	Description	OE-number	Measures
1	64136	tie rod end	Part of	c:14.5 th:FM16X1.5R	5	864601	silentblock for TCA	281 407 077	di:20.5 do:38.4 (*)
2	64137	tie rod end	Part of	c:14.5 th:FM16x1.5L	6	64085	ball joint upper	281 407 361	c:19.8
3	64139	drag link	281 415 701 E	L:493	7	64084	ball joint lower	281 407 187 B	c:23.7
4	64138	tie rod end	281 415 711 A	c:14.5 th:MM16X1.5R					

Copyright 2021

VOLKSWAGEN
LT

LT 40-55 I (293-909) 04/1975 - 06/1996

3 64132

4 64133

UPPER

2 64085

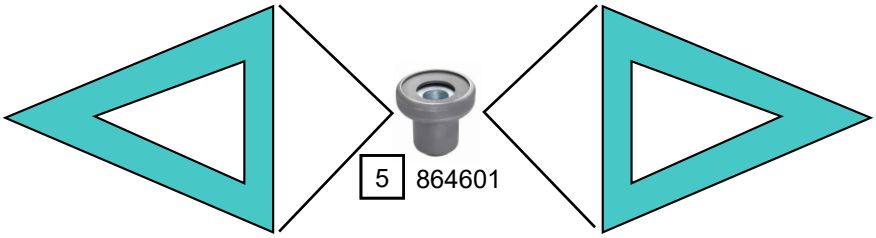

5 864601

2 64085

LOWER

1 64084

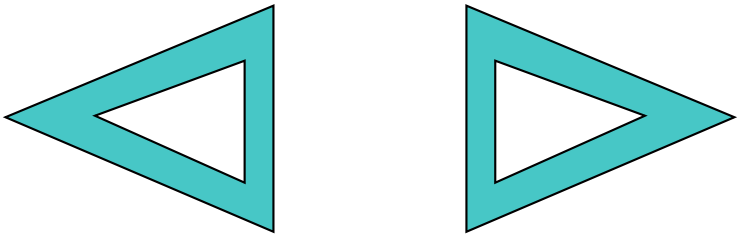

1 64084

Ref.	Sidem Ref.	Description	OE-number	Measures	Ref.	Sidem Ref.	Description	OE-number	Measures
1	64084	ball joint lower	281 407 187 B	c:23.7	4	64133	tie rod end	291 415 811 B	c:16.2 th:MM18X1.5L
2	64085	ball joint upper	281 407 361	c:19.8	5	864601	silentblock for TCA	281 407 077	di:20.5 do:38.4 (*)
3	64132	tie rod end	291 415 711	c:16.2 th:MM18x1.5R					

Copyright 2021

VOLKSWAGEN

LT

LT 28 II (2D_)	07/1996 - 07/2006
LT 35 II (2D_)	07/1996 - 07/2006
LT 46 II (2D_)	07/1996 - 07/2006

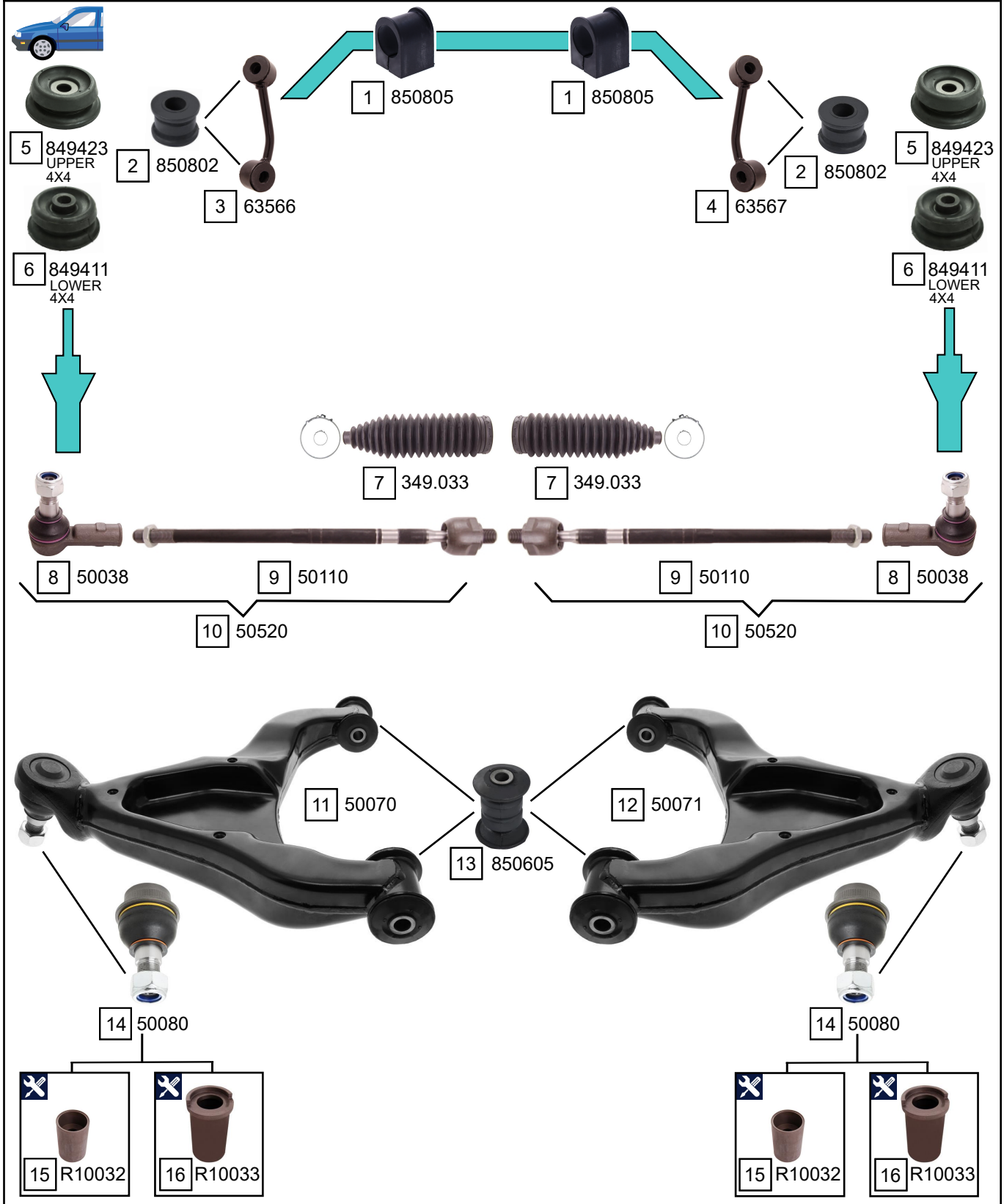

Ref.	Sidem Ref.	Description	OE-number	Measures	Ref.	Sidem Ref.	Description	OE-number	Measures
1	850805	stabiliser mounting	2D0 411 041 B	di:24.5	9	50110	axial joint	Part of	th:MM16X1.5R L:385
2	850802	stabiliser mounting	2D0 411 041 A	di:13.5	10	50520	tie rod	2D0 422 803	c:18 L:460
3	63566	stabiliser link left	2D0 411 051	L:115	11	50070	TCA left wbj	2D0 407 021 B	c:23.4
4	63567	stabiliser link right	2D0 411 052	L:115	12	50071	TCA right wbj	2D0 407 022 B	c:23.4
5	849423	strut mount	2D0 407 183	di:16.2 do:86 L:33	13	850605	silentblock for TCA	2D0 407 140	di:14.2 do:43.2 (*)
6	849411	strut mount	2D0 407 183 A	di:16.2 do:84 L:37	14	50080	ball joint	2D0 407 361 A	c:23.4 do:45.3
7	349.033	steering rack gaiter	2D0 498 831	D:49 d:16 L:200	15	R10032	mounting tool	Part of	di:56 do:65
8	50038	tie rod end	2D0 422 811	c:18 th:FM16X1.5R	16	R10033	mounting tool	Part of	di:50 do:90

Copyright 2021

VOLKSWAGEN
LT

LT 28 II (2D_)	07/1996 - 07/2006
LT 35 II (2D_)	07/1996 - 07/2006
LT 46 II (2D_)	07/1996 - 07/2006

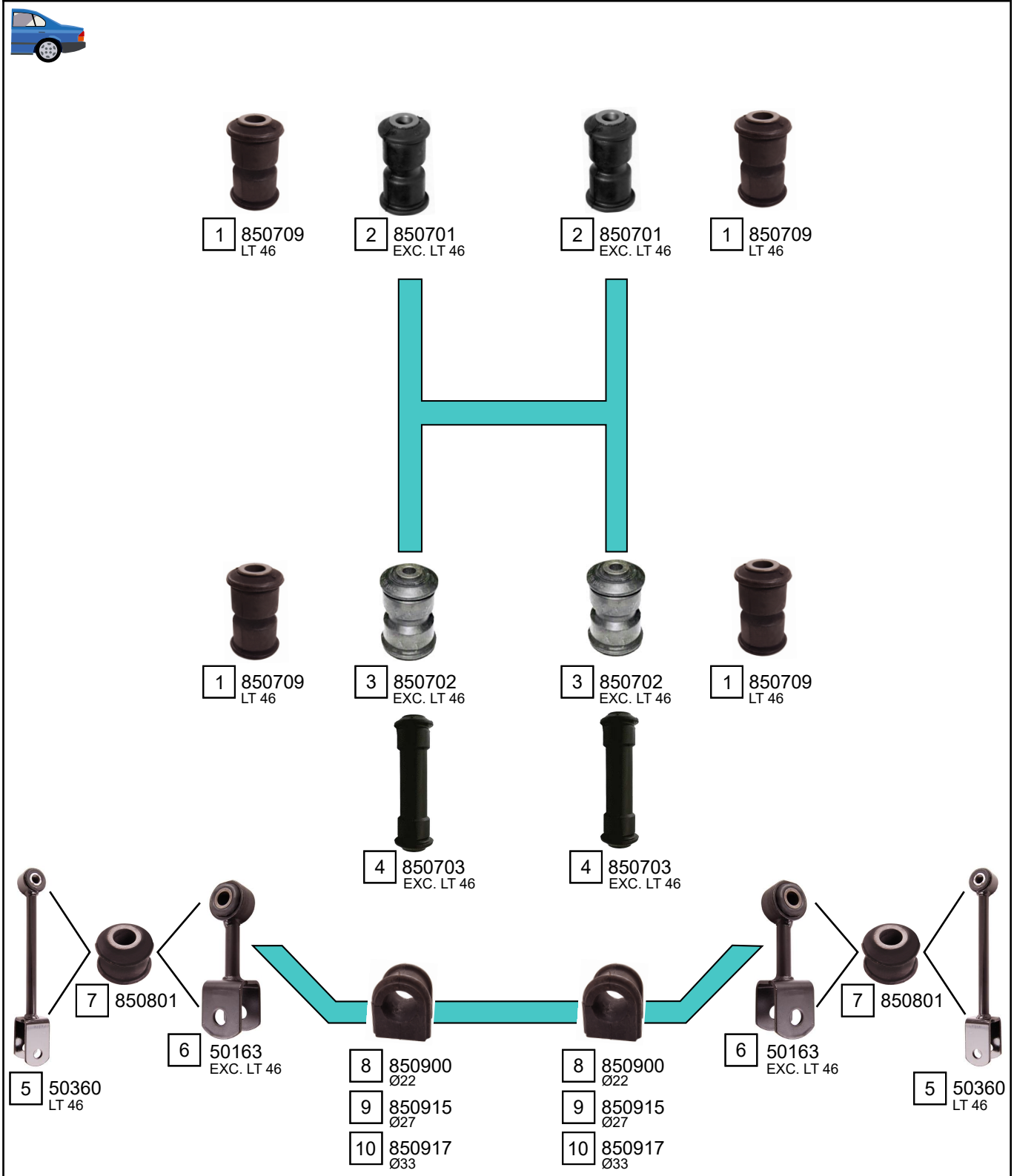

Ref.	Sidem Ref.	Description	OE-number	Measures	Ref.	Sidem Ref.	Description	OE-number	Measures
1	850709	spring bush	2E0 411 346	di:16.1 do:39	6	50163	stabiliser link rear axle	2D0 511 329	L:95
2	850701	spring bush	2D0 511 171	di:12.1 do:32	7	850801	stabiliser mounting	2D0 511 413	di:12
3	850702	spring bush	2D0 511 171 C	di:12 do:50	8	850900	stabiliser mounting	2D0 511 413 A	di:22
4	850703	spring bush	2D0 511 181	di:12 do:22	9	850915	stabiliser mounting	2D0 511 413 B	di:27
5	50360	stabiliser link rear axle	2D0 511 329 A	L:230	10	850917	stabiliser mounting	2D0 511 413 D	di:33

Copyright 2021

VOLKSWAGEN
LUPO

LUPO (6X1, 6E1) 04/1998 - 07/2005

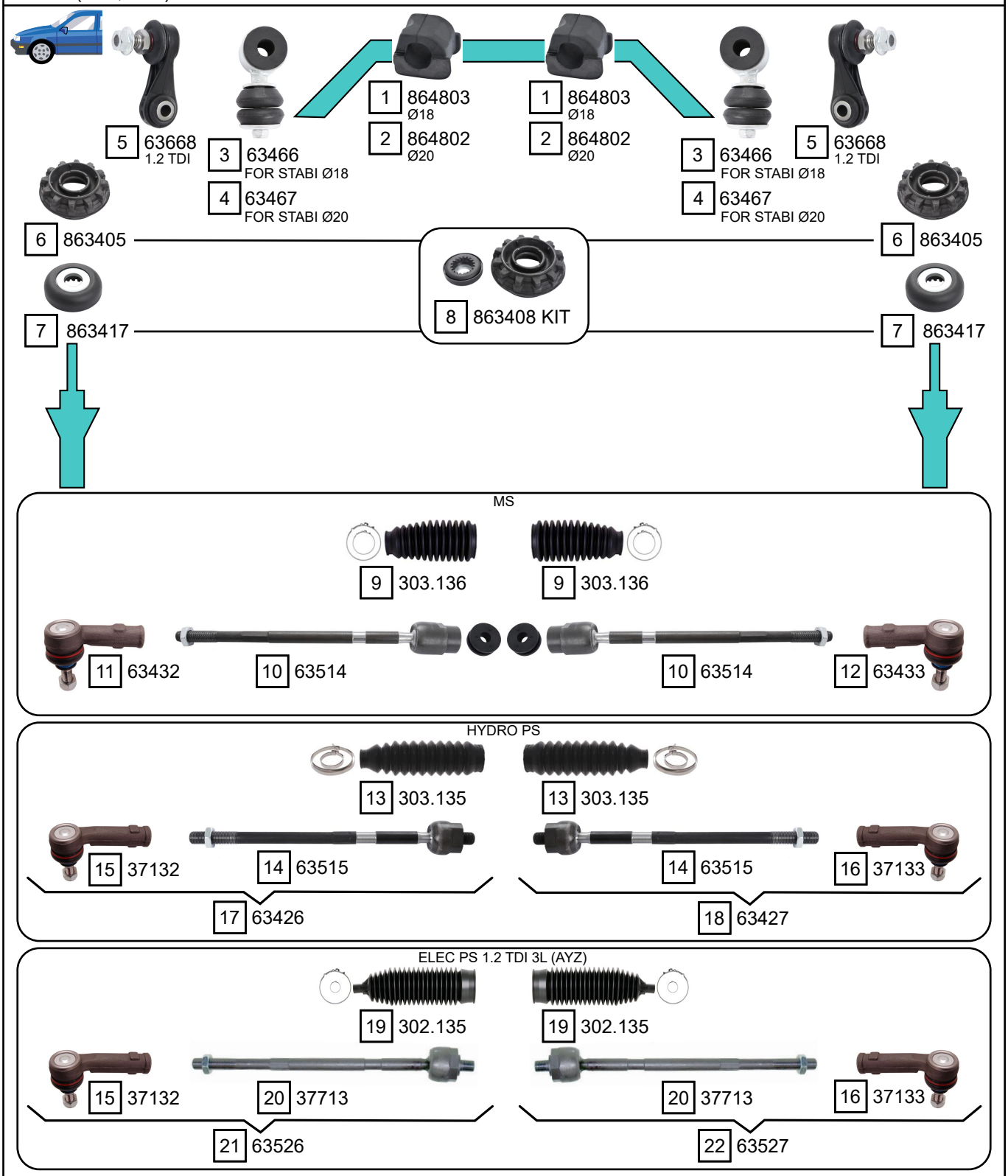

Ref.	Sidem Ref.	description	OE-number	measures	Ref.	Sidem Ref.	description	OE-number	measures
1	864803	stabiliser mounting	6X0 411 313	di:18	12	63433	tie rod end right	6N0 422 812	c:12.6 th:FM14x1.5R
2	864802	stabiliser mounting	6X0 411 313 A	di:18	13	303.135	steering rack gaiter	6N0 422 831	D:42 d:11 L:208
3	63466	stabiliser link	6N0 411 315 C	L:72	14	63515	axial joint	Part of	th:MM14X1.5R L:292
4	63467	stabiliser link	6N0 411 315 D S1	L:73	15	37132	tie rod end	6X0 422 811	c:12.7 th:FM14X1.5R
5	63668	stabiliser link	6E0 411 315	L:51	16	37133	tie rod end	6X0 422 812	c:12.7 th:FM14X1.5R
6	863405	strut mount	6N0 412 331 A	di:27 do:82.5 L:34	17	63426	tie rod left	6N0 422 803 C	c:12.7
7	863417	bearing	1J0 412 249	di:14.3 do:45.3 L:13.4	18	63427	tie rod right	6N0 422 804 C	c:12.7
8	863408 KIT	strut mount kit	6N0 412 331 A S1	di:14.3 do:83 L:36	19	302.135	steering rack gaiter	6E0 419 831	D:48 d:12 L:200
9	303.136	steering rack gaiter	6N0 419 831	D:40 d:25 L:143	20	37713	axial joint	Part of	th:MM14X1.5R L:309
10	63514	axial joint	Part of	th:FM22X1.5R L:332	21	63526	tie rod left	6E0 419 803 A	c:12.7
11	63432	tie rod end left	6N0 419 811	c:12.6 th:FM14x1.5R	22	63527	tie rod right	6E0 419 804 A	c:12.7

Copyright 2021

LUPO (6X1, 6E1) 04/1998 - 07/2005

EXC. 1.4 AFK, AQQ, AUB, AMF, ARR - 1.2 TDI (AYZ)

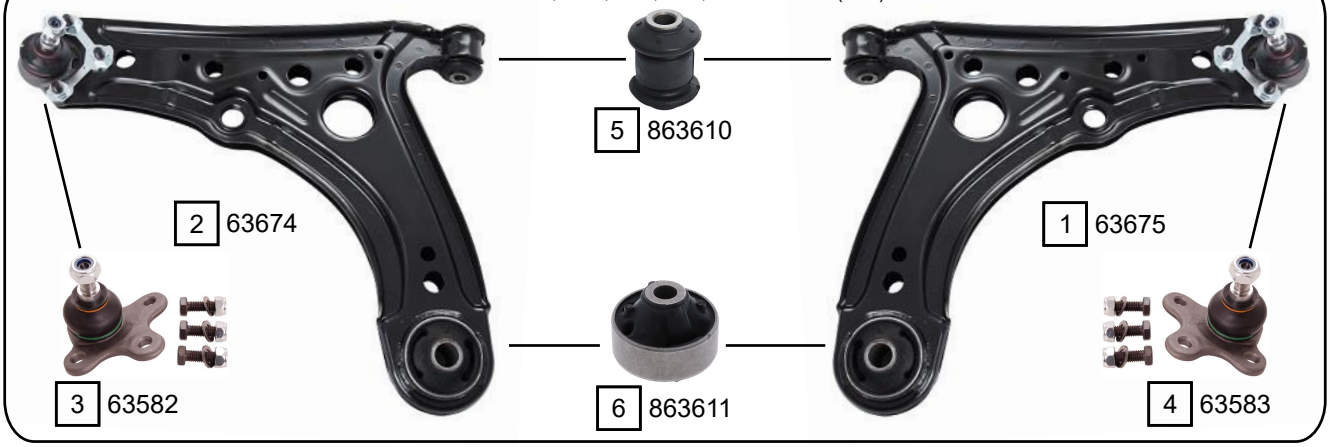

1.4 AFK, AQQ, AUB, AMF

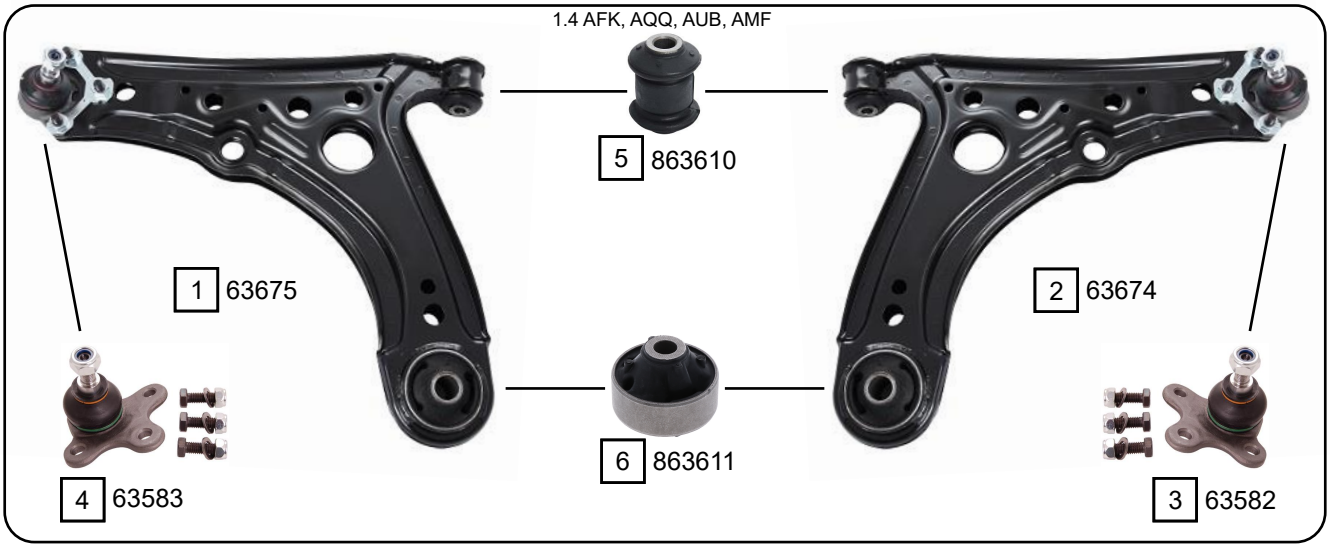

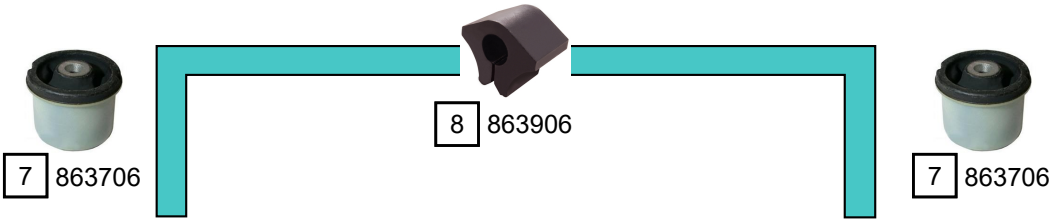

Ref.	Sidem Ref.	Description	OE-number	Measures	Ref.	Sidem Ref.	Description	OE-number	Measures
1	63675	TCA right wbj	6X0 407 151 A S2	c:14.6	5	863610	silentblock for TCA	Part of	di:10.1 do:27.4 (*)
2	63674	TCA left wbj	6X0 407 151 A S1	c:14.5	6	863611	silentblock for TCA	6N0 407 181	di:17.1 do:60.2 (*)
3	63583	ball joint right	6N0 407 365 A	c:14.7	7	863706	mounting axle body	6N0 501 541 D	di:10.1 do:58
4	63582	ball joint left	6N0 407 365	c:14.7	8	863906	stabiliser mounting	871 511 423	di:16.5

Copyright 2021

VOLKSWAGEN
MULTIVAN

MULTIVAN T5 (7H_, 7E_) 04/2003 - 08/2015

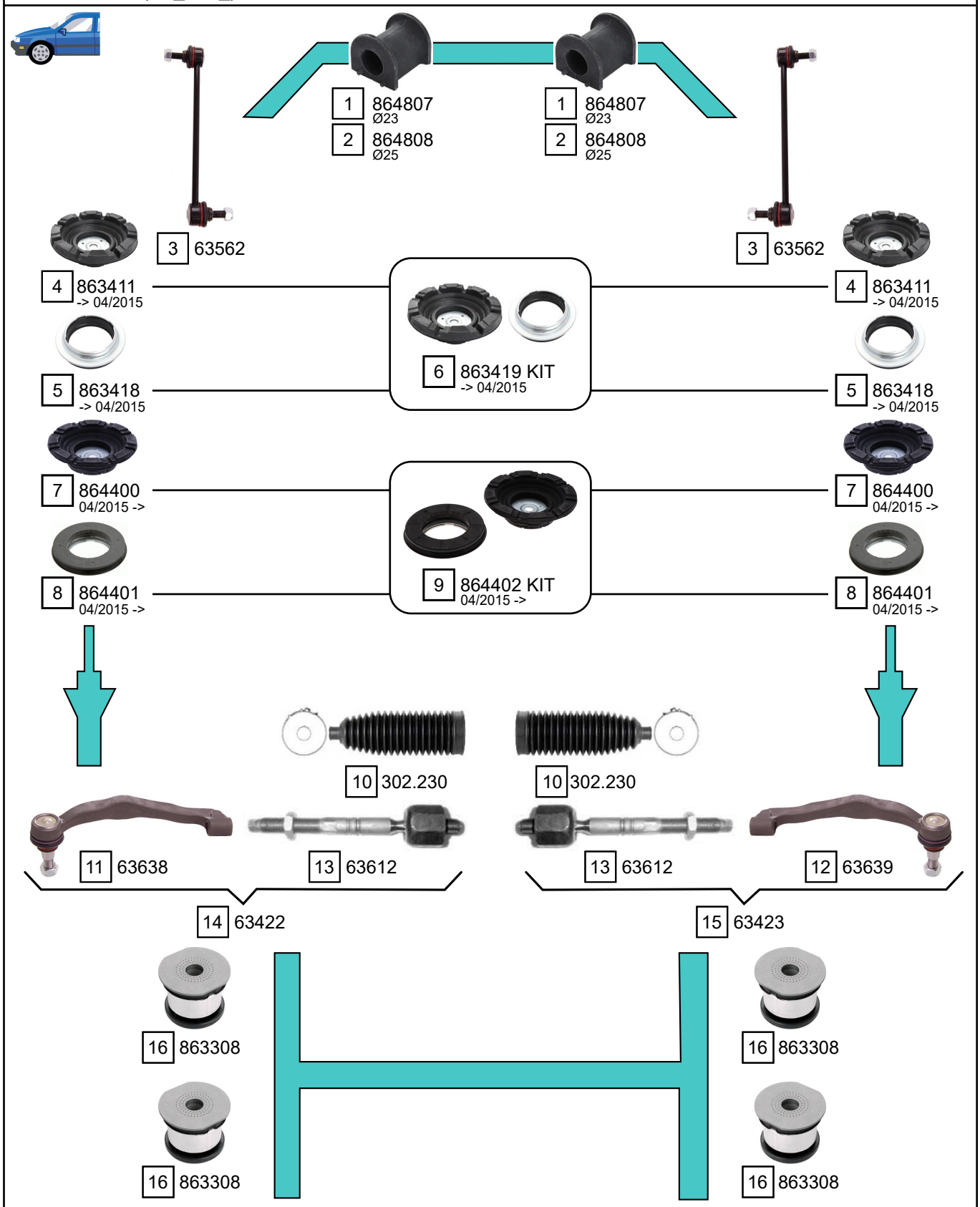

Ref.	Sidem Ref.	Description	OE-number	Measures	Ref.	Sidem Ref.	Description	OE-number	Measures
1	864807	stabiliser mounting	7H5 411 313 A	di:22	9	864402 KIT	strut mount kit	7E0 412 331 A S1	di:14.5 do:154
2	864808	stabiliser mounting	7H5 411 313 B	di:23.5	10	302.230	steering rack gaiter	7H0 422 831	D:62 d:16 L:205
3	63562	stabiliser link	7H5 411 317 E	L:260	11	63638	tie rod end left	7H0 422 817 D	c:16.7 th:FM16x1.5R
4	863411	strut mount	7E0 412 331	di:14.4 do:152.5 L:48.6	12	63639	tie rod end right	7H0 422 818 D	c:16.7 th:FM16x1.5R
5	863418	bearing	7E0 412 249	di:73.7 do:112 L:27.1	13	63612	axial joint	Part of	th:MM16x1.5R L:180
6	863419 KIT	strut mount kit	7E0 412 331 S1	di:14.5 do:153	14	63422	tie rod left	7H0 419 803 D	c:16.7
7	864400	strut mount	7E0 412 331 A	di:14.5 do:153 L:44	15	63423	tie rod right	7H0 419 804 D	c:16.7
8	864401	bearing	7E0 412 249 B	di:73.5 do:127 L:29.2	16	863308	mounting axle body	7H0 499 035 D	di:22.2 do:70.5

Copyright 2021

VOLKSWAGEN
MULTIVAN

MULTIVAN T5 (7H_, 7E_) 04/2003 - 08/2015

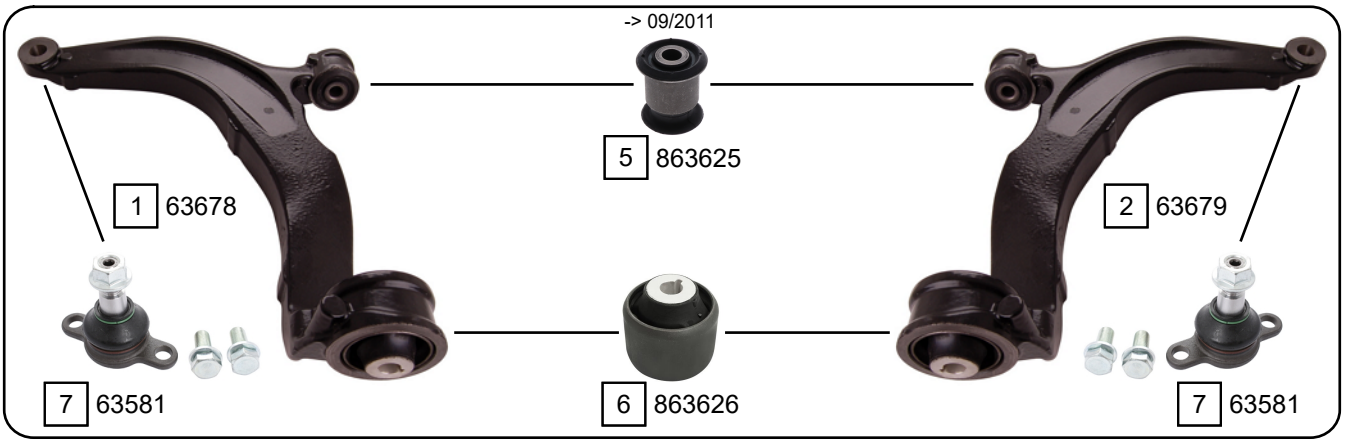

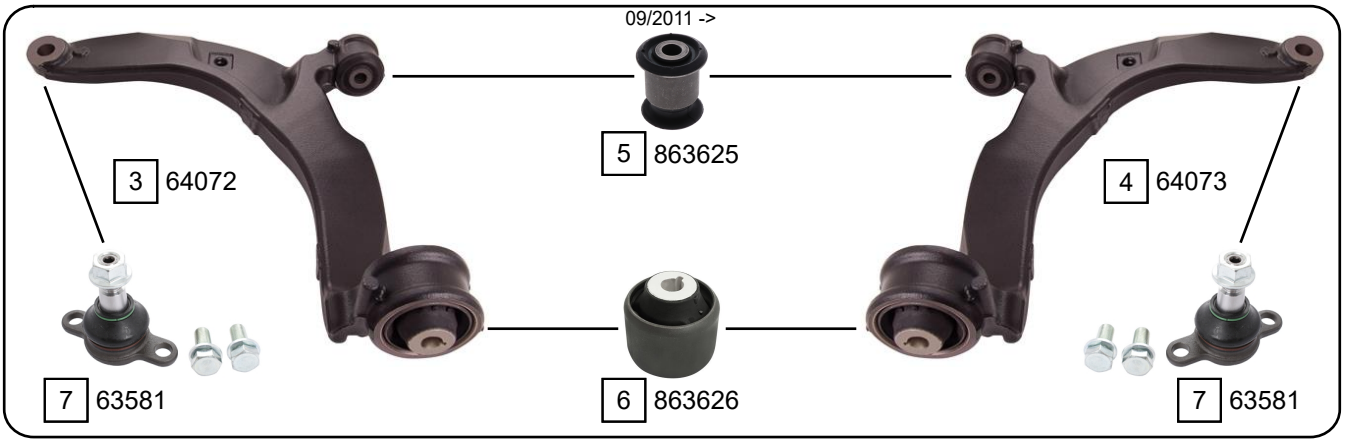

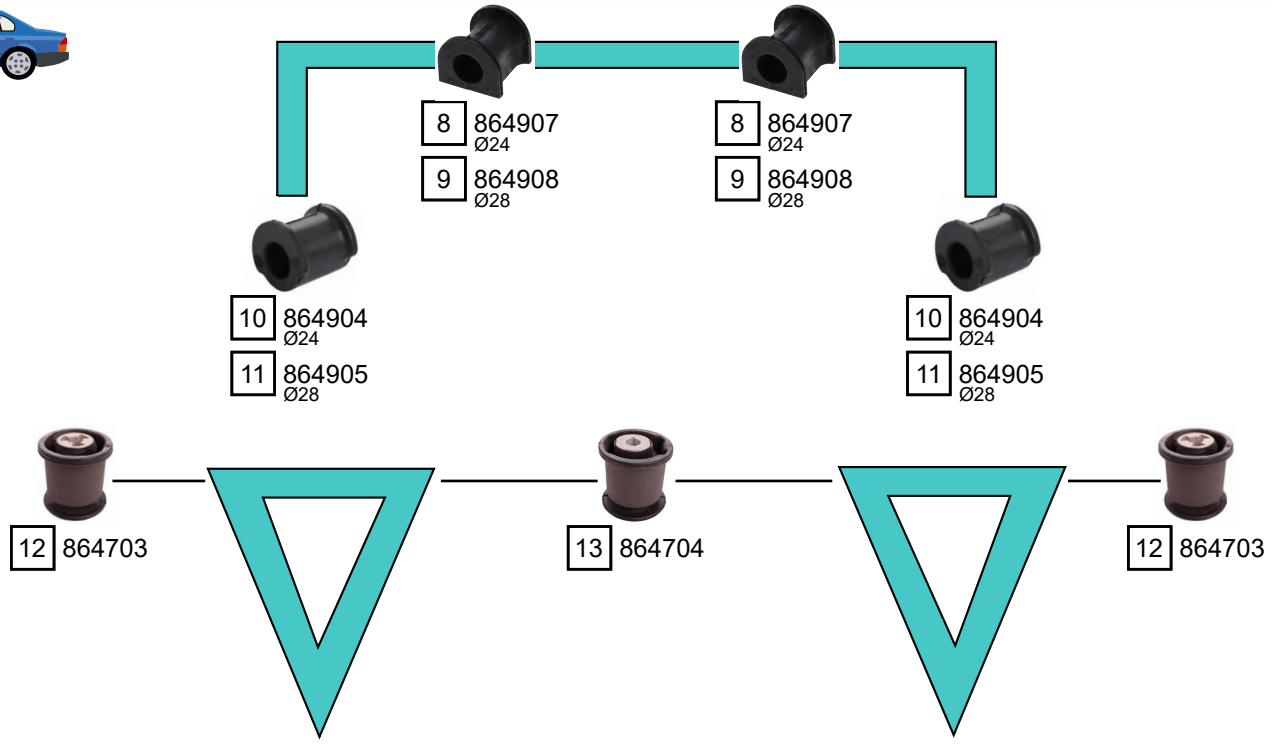

Ref.	Sidem Ref.	Description	OE-number	Measures	Ref.	Sidem Ref.	Description	OE-number	Measures
1	63678	TCA left wobj	7H0 407 151 F	c:21.5	8	864907	stabiliser mounting	7H5 511 413 B	di:22.5
2	63679	TCA right wobj	7H0 407 152 F	c:21.5	9	864908	stabiliser mounting	7H5 511 413 C	di:26.5
3	64072	TCA left wobj	7E0 407 151 C	c:21.5	10	864904	stabiliser mounting	7H5 511 414	di:22.5
4	64073	TCA right wobj	7E0 407 152 B	c:21.5	11	864905	stabiliser mounting	7H5 511 414 A	di:26.5
5	863625	silentblock for TCA	7H0 407 183	di:14.2 do:40.3 (*)	12	864703	silentblock for TCA	7H0 501 131 A	di:14.1 do:60.5 (*)
6	863626	silentblock for TCA	7H0 407 182 A	di:14.1 do:60.2 (*)	13	864704	silentblock for TCA	7H0 501 132 A	di:14.1 do:60.5 (*)
7	63581	ball joint	7E0 407 361 A	c:18.2					

Copyright 2021

VOLKSWAGEN
MULTIVAN

MULTIVAN T6 (SG_,SH_) 04/2015 ->

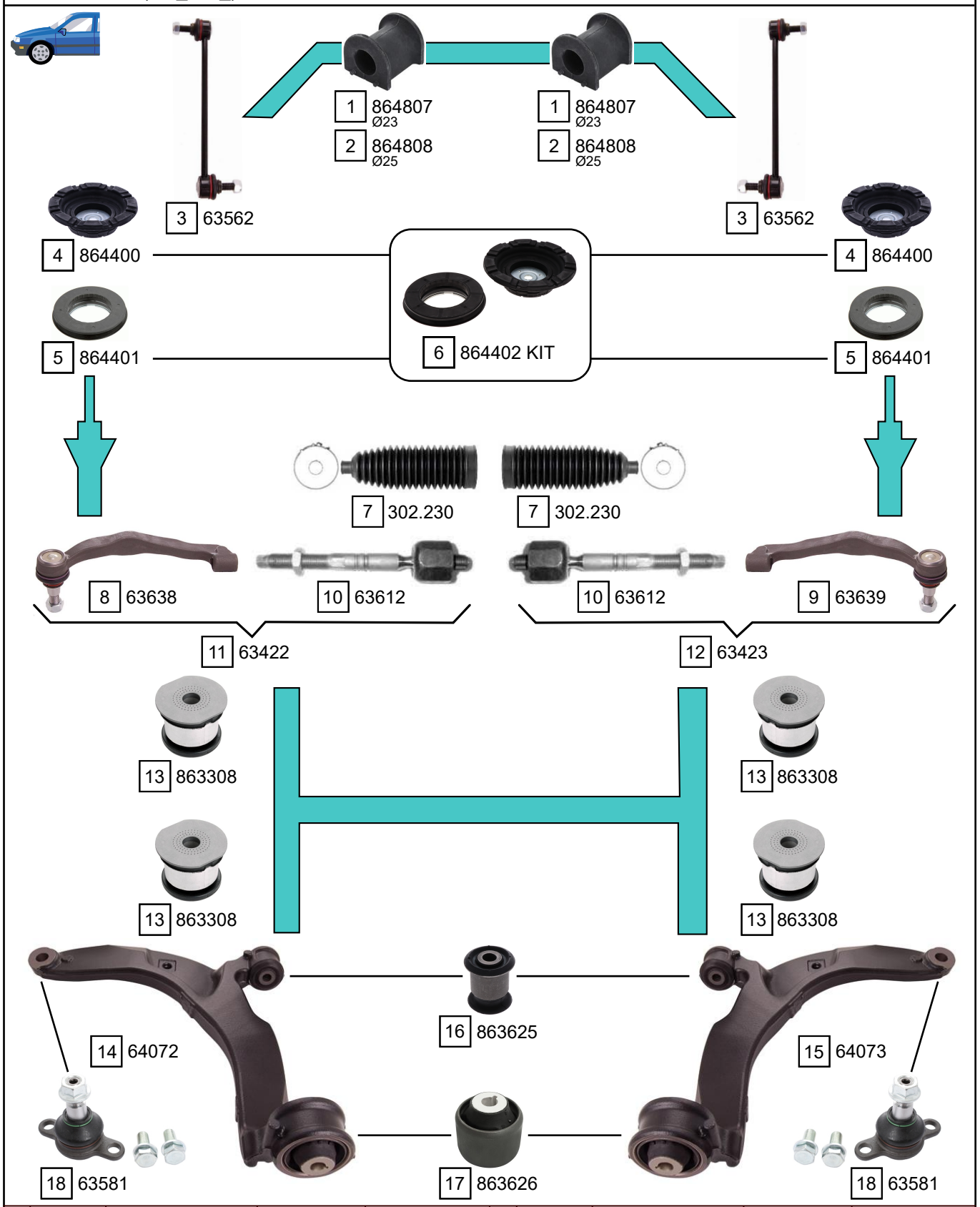

Ref.	Sidem Ref.	Description	OE-number	Measures	Ref.	Sidem Ref.	Description	OE-number	Measures
1	864807	stabiliser mounting	7H5 411 313 A	di:22	10	63612	axial joint	Part of	th:MM16x1.5R L:180
2	864808	stabiliser mounting	7H5 411 313 B	di:23.5	11	63422	tie rod left	7H0 419 803 D	c:16.7
3	63562	stabiliser link	7H5 411 317 E	L:260	12	63423	tie rod right	7H0 419 804 D	c:16.7
4	864400	strut mount	7E0 412 331 A	di:14.5 do:153 L:44	13	863308	mounting axle body	7H0 499 035 D	di:22.2 do:70.5
5	864401	bearing	7E0 412 249 B	di:73.5 do:127 L:29.2	14	64072	TCA left wobj	7E0 407 151 C	c:21.5
6	864402 KIT	strut mount kit	7E0 412 331 A S1	di:14.5 do:154	15	64073	TCA right wobj	7E0 407 152 B	c:21.5
7	302.230	steering rack gaiter	7H0 422 831	D:62 d:16 L:205	16	863625	silentblock for TCA	7H0 407 183	di:14.2 do:40.3 (*)
8	63638	tie rod end left	7H0 422 817 D	c:16.7 th:FM16x1.5R	17	863626	silentblock for TCA	7H0 407 182 A	di:14.1 do:60.2 (*)
9	63639	tie rod end right	7H0 422 818 D	c:16.7 th:FM16x1.5R	18	63581	ball joint	7E0 407 361 A	c:18.2

Copyright 2021

MULTIVAN T6 (SG_,SH_) 04/2015 ->

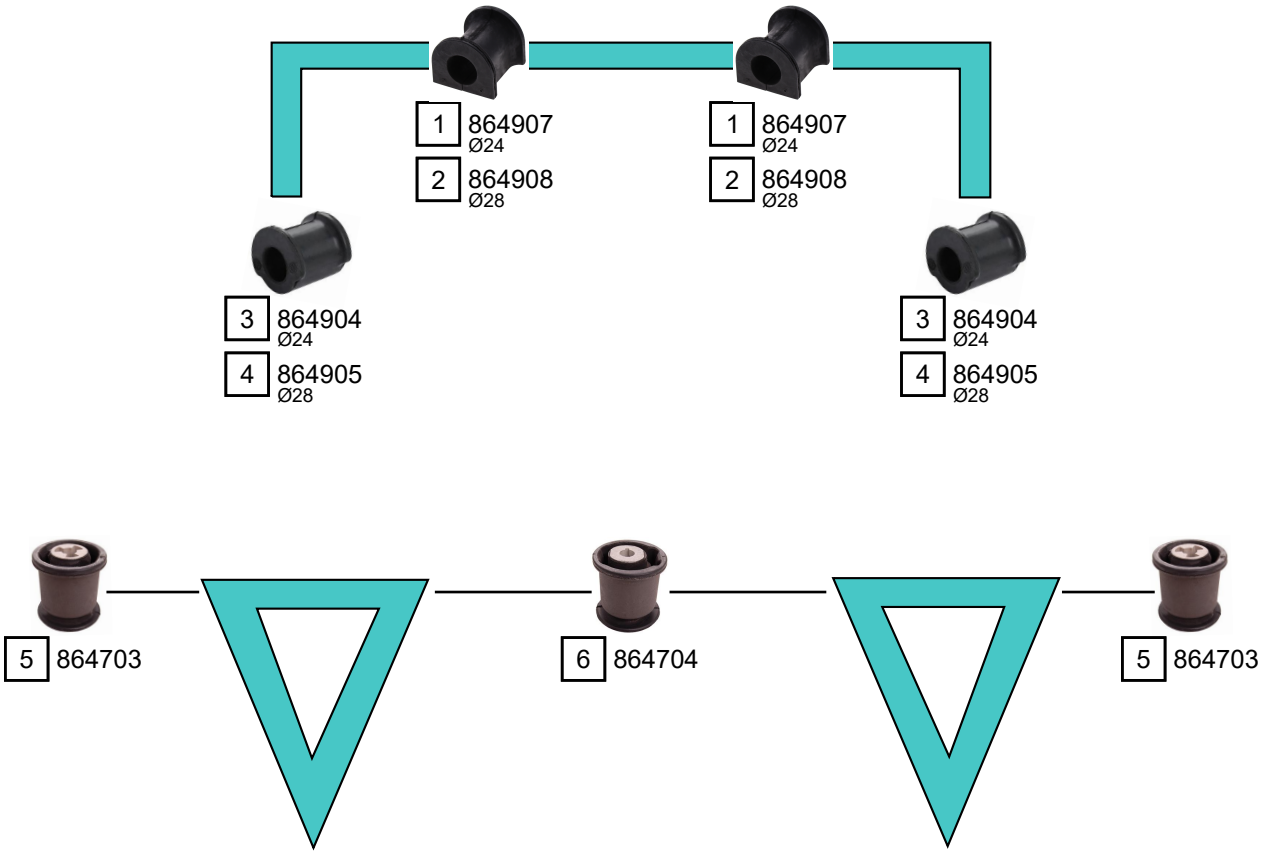

Ref.	Sidem Ref.	Description	OE-number	Measures	Ref.	Sidem Ref.	Description	OE-number	Measures
1	864907	stabiliser mounting	7H5 511 413 B	di:22.5	4	864905	stabiliser mounting	7H5 511 414 A	di:26.5
2	864908	stabiliser mounting	7H5 511 413 C	di:26.5	5	864703	silentblock for TCA	7H0 501 131 A	di:14.1 do:60.5 (*)
3	864904	stabiliser mounting	7H5 511 414	di:22.5	6	864704	silentblock for TCA	7H0 501 132 A	di:14.1 do:60.5 (*)

Copyright 2021

VOLKSWAGEN
NEW BEETLE

NEW BEETLE (9C1, 1C1) 01/1998 - 09/2010
NEW BEETLE CABRIOLET (1Y7) 03/2003 - 10/2010

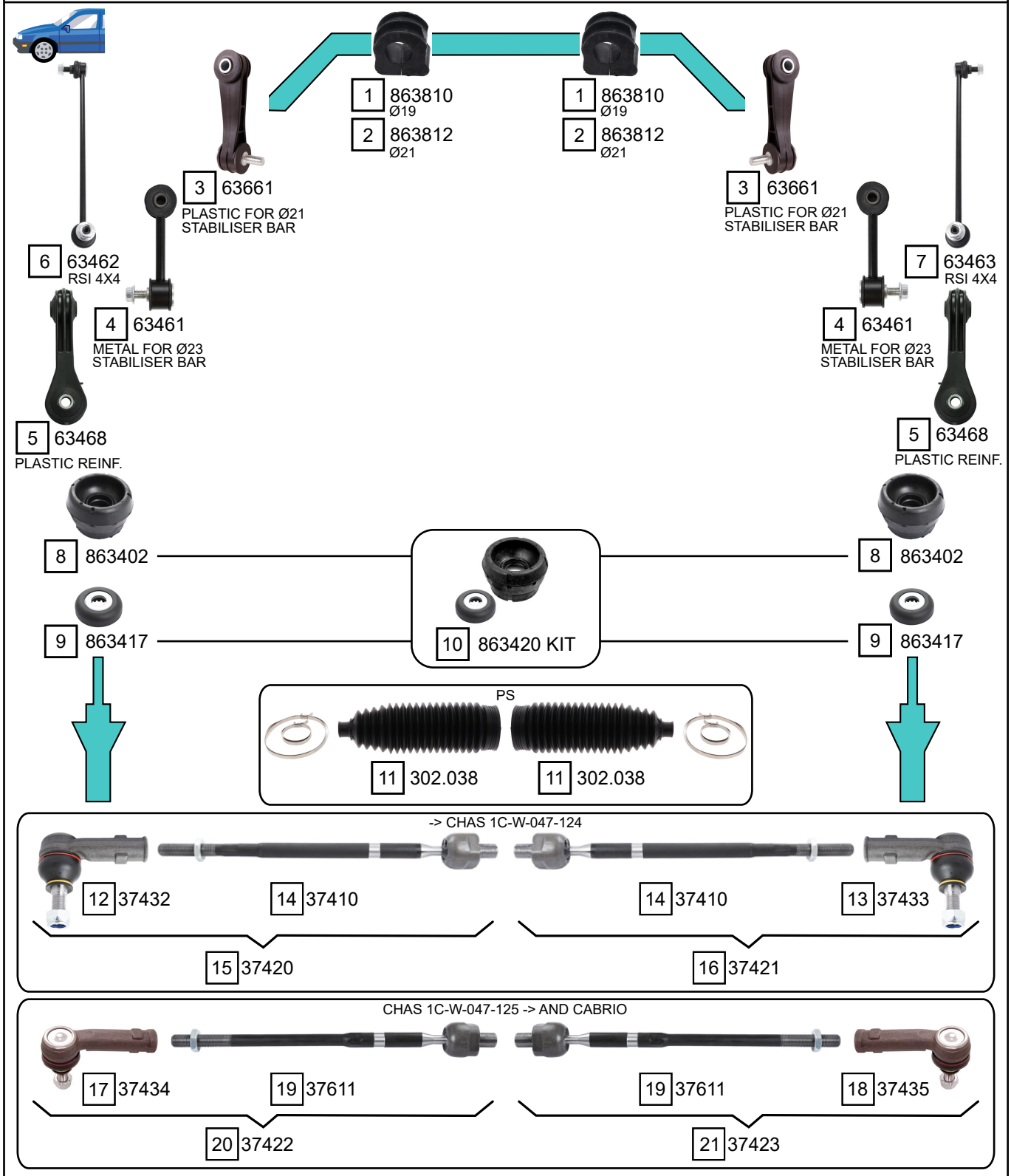

Ref.	Sidem Ref.	description	OE-number	measures	Ref.	Sidem Ref.	description	OE-number	measures
1	863810	stabiliser mounting	1J0 411 314 R	di:19	12	37432	tie rod end left	1J0 422 811 A	c:13.3 th:FM14x1.5R
2	863812	stabiliser mounting	1J0 411 314 T	di:21	13	37433	tie rod end right	1J0 422 812 A	c:13.3 th:FM14x1.5R
3	63661	stabiliser link	1J0 411 315 J	L:105	14	37410	axial joint	Part of	th:MM16X1.5R L:338
4	63461	stabiliser link	1J0 411 315 G	L:105	15	37420	tie rod left	1J0 422 803 A	c:13.3
5	63468	stabiliser link	1J0 411 315 K	L:105	16	37421	tie rod right	1J0 422 804 A	c:13.3
6	63462	stabiliser link left	1J0 411 315 D	L:336	17	37434	tie rod end left	1J0 422 811 B	c:13.2 th:FM14x1.5R
7	63463	stabiliser link right	1J0 411 316 D	L:336	18	37435	tie rod end right	1J0 422 812 B	c:13.2 th:FM14x1.5R
8	863402	strut mount	1J0 412 331 C	di:26 do:82 L:53	19	37611	axial joint	Part of	th:MM16X1.5R L:319
9	863417	bearing	1J0 412 249	di:14.3 do:45.3 L:13.4	20	37422	tie rod left	1J0 422 803 H	c:13.2
10	863420 KIT	strut mount kit	1J0 412 331 C S1	di:26 do:82 L:53	21	37423	tie rod right	1J0 422 804 H	c:13.2
11	302.038	steering rack gaiter	1J0 422 831 B	D:50 d:15 L:186					

Copyright 2021

VOLKSWAGEN
NEW BEETLE

NEW BEETLE (9C1, 1C1) 01/1998 - 09/2010
NEW BEETLE CABRIOLET (1Y7) 03/2003 - 10/2010

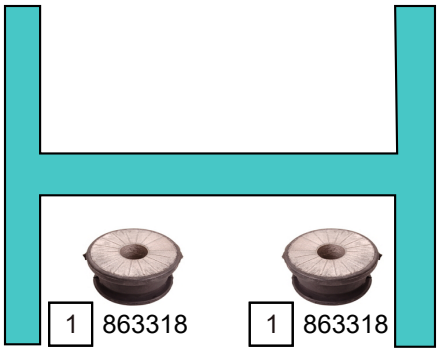

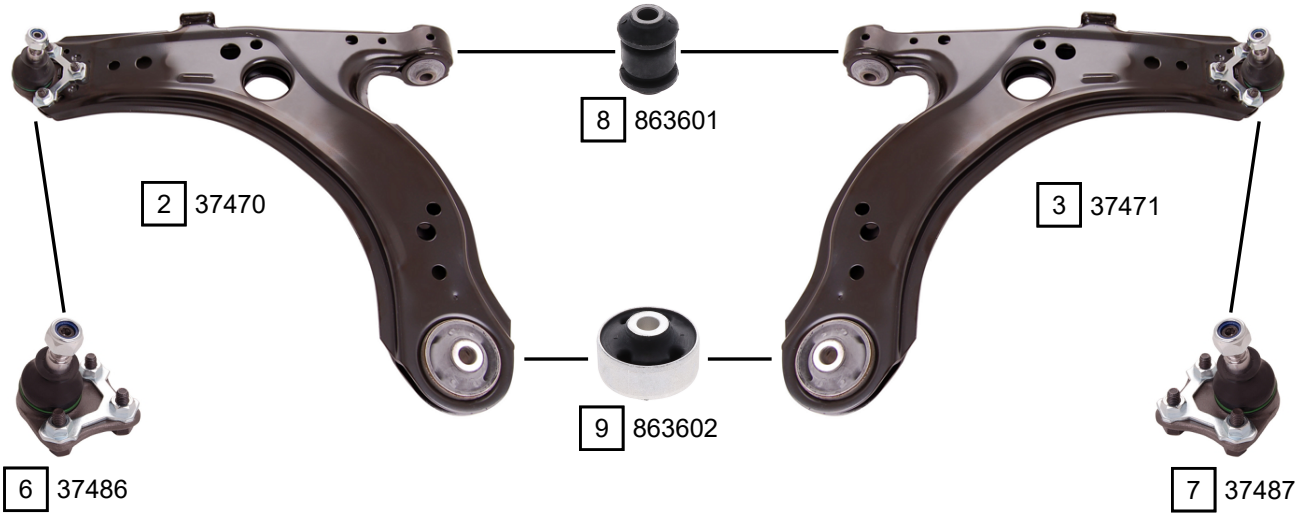

REINFORCED - ONLY REPLACE IN PAIRS

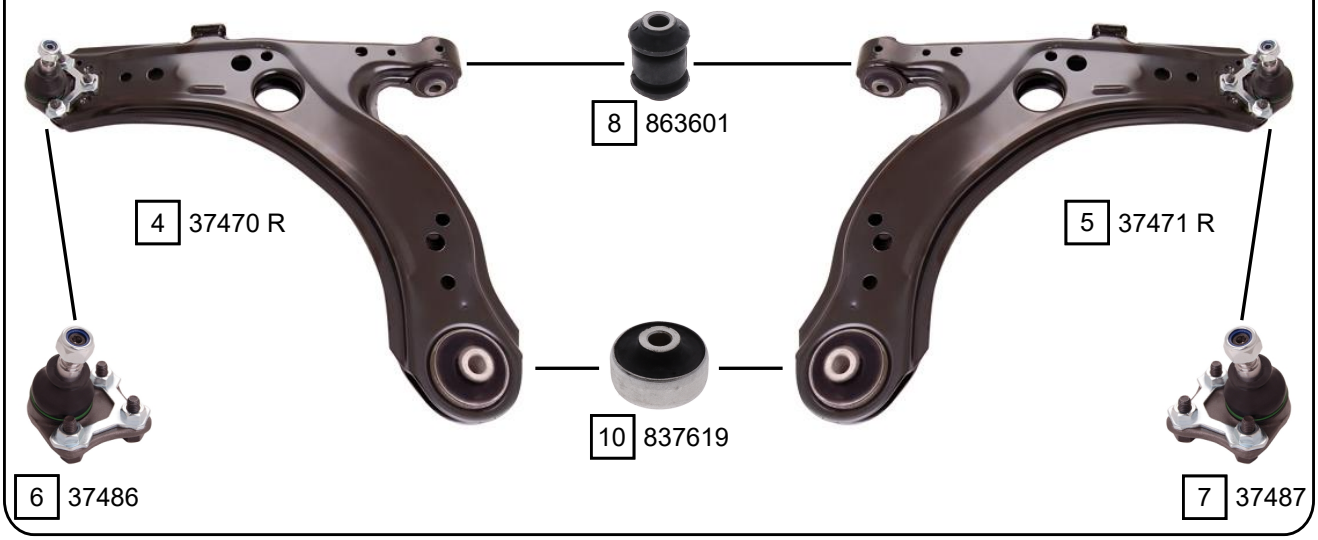

Ref.	Sidem Ref.	Description	OE-number	Measures	Ref.	Sidem Ref.	Description	OE-number	Measures
1	863318	mounting axle body	1J0 199 429	di:18.2 do:50.5	6	37486	ball joint left	1J0 407 365 J	c:14.9
2	37470	TCA left wbj	1J0 407 151 C S1	c:14.9	7	37487	ball joint right	1J0 407 366 J	c:14.9
3	37471	TCA right wbj	1J0 407 151 C S2	c:14.9	8	863601	silentblock for TCA	357 407 182	di:12 do:32.6 (*)
4	37470 R	TCA left wbj	1J0 407 151 C S1 R	c:14.9	9	863602	silentblock for TCA	1J0 407 181	di:13 do:60 (*)
5	37471 R	TCA right wbj	1J0 407 151 C S2 R	c:14.9	10	837619	silentblock for TCA	6R0 407 181 B	di:13.2 do:60.2 (*)

Copyright 2021

VOLKSWAGEN
NEW BEETLE

NEW BEETLE (9C1, 1C1) 01/1998 - 09/2010
NEW BEETLE CABRIOLET (1Y7) 03/2003 - 10/2010

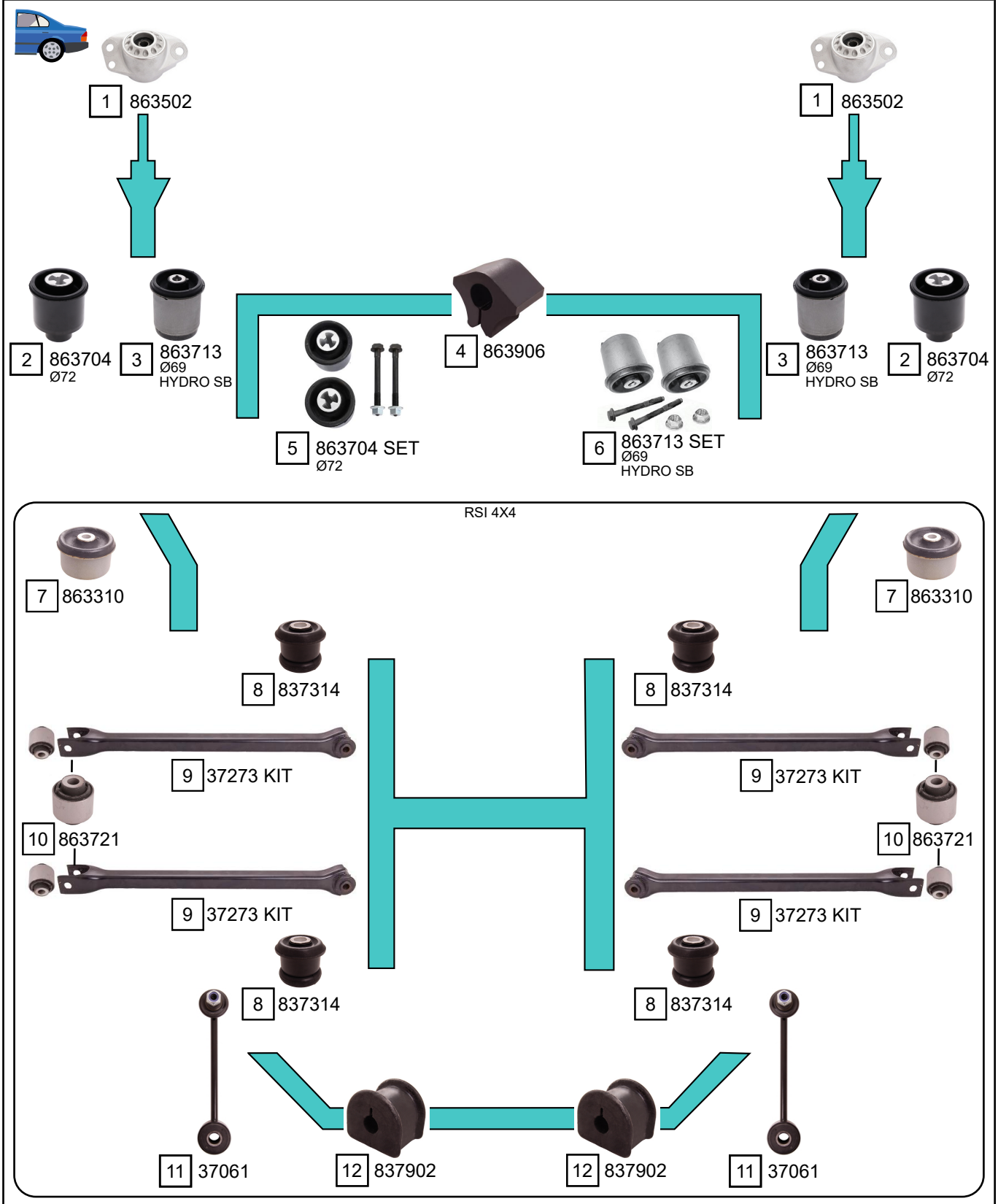

Ref.	Sidem Ref.	Description	OE-number	Measures	Ref.	Sidem Ref.	Description	OE-number	Measures
1	863502	strut mount	6R0 513 353	di:11.1 do:62 L:58.8	7	863310	mounting axle body	1J0 505 171 B	di:12 do:72
2	863704	mounting axle body	1J0 501 541 C	di:12 do:71.5	8	837314	mounting axle body	1J0 505 145 B	di:16 do:51.6
3	863713	mounting axle body	1J0 501 541 D	di:13.2 do:69	9	37273 KIT	track rod	1J0 505 323 L S1	L:517
4	863906	stabiliser mounting	871 511 423	di:16.5	10	863721	silentblock for TCA	1J0 505 203	di:12.3 do:43.6 (*)
5	863704 SET	mounting axle body set	1J0 501 541 C S1	do:71.5	11	37061	stabiliser link rear axle	1J0 505 466 B	L:175
6	863713 SET	mounting axle body set	1J0 501 541 D S1	do:69	12	837902	stabiliser mounting	8D0 511 327 C	di:10.5

Copyright 2021

PASSAT II (32B)
PASSAT II VARIANT (32B)

08/1980 - 07/1990

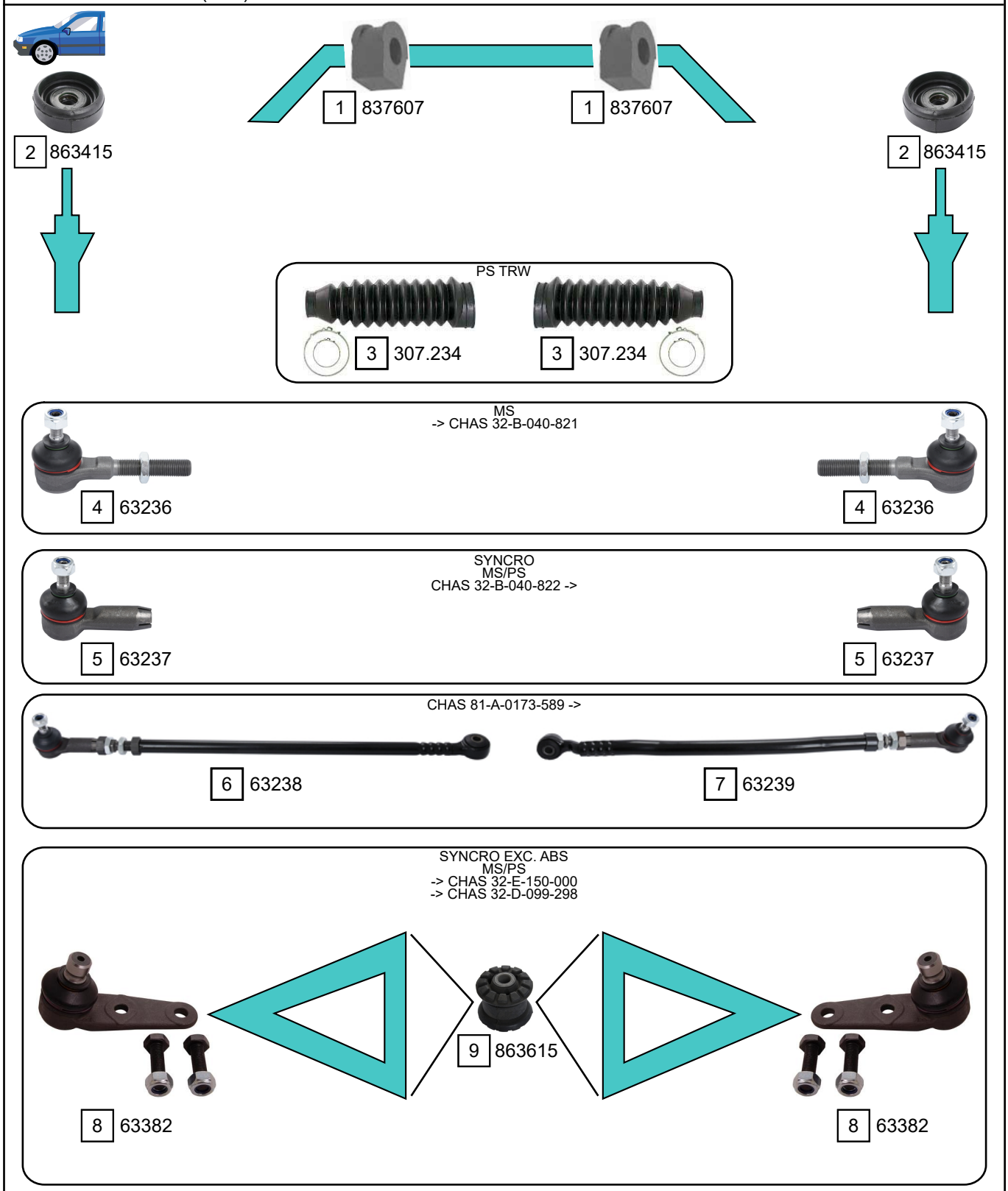

Ref.	Sidem Ref.	Description	OE-number	Measures	Ref.	Sidem Ref.	Description	OE-number	Measures
1	837607	stabiliser mounting	823 411 313 A	di:14	6	63238	tie rod left	811 419 801 E	L:607
2	863415	strut mount	8A0 412 323 D	di:14.2 do:76 L:36	7	63239	tie rod right	811 419 802 J	c:10.8 L:540
3	307.234	steering rack gaiter	1H0 422 831 B	D:41 d:10 L:210	8	63382	ball joint lower	823 407 365 E	c:17
4	63236	tie rod end	811 419 812	c:10.8 th:MM14X1.5R	9	863615	silentblock for TCA	811 407 181 A	di:10.2 do:38.2 (*)
5	63237	tie rod end	811 419 812 A	c:10.8 th:FM14x1.5R					

Copyright 2021

VOLKSWAGEN
PASSAT

PASSAT II (32B)
PASSAT II VARIANT (32B)

08/1980 - 07/1990

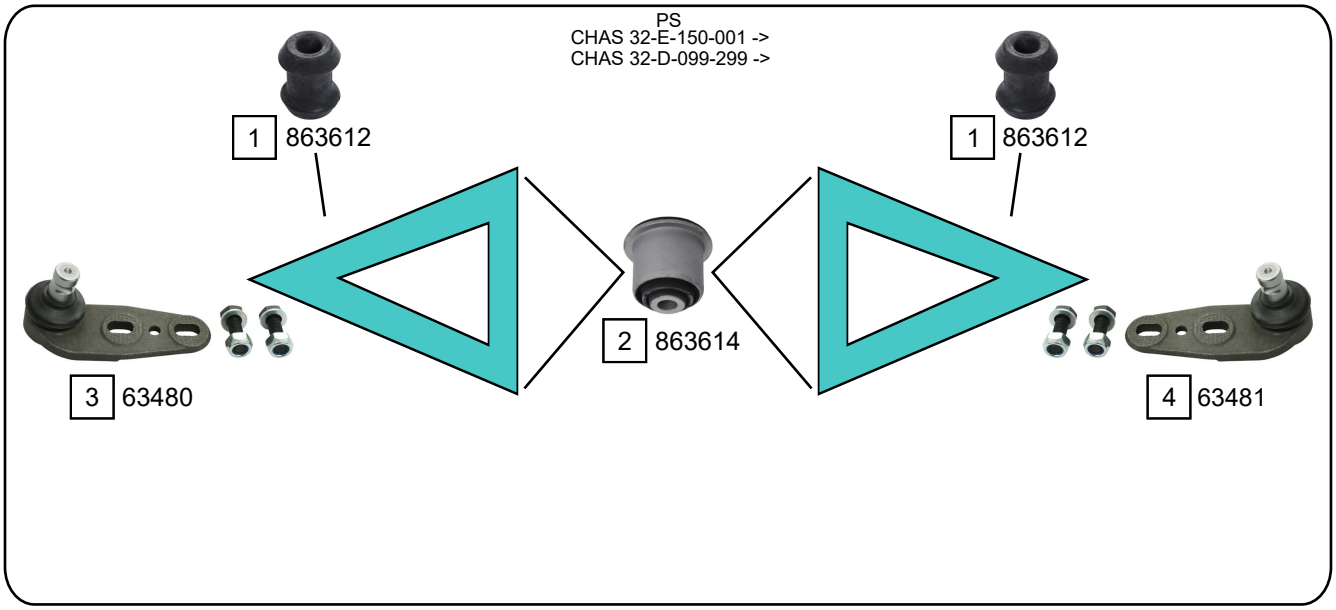

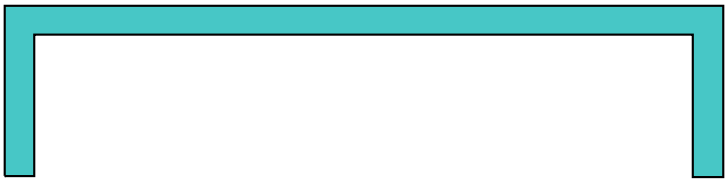

Ref.	Sidem Ref.	Description	OE-number	Measures	Ref.	Sidem Ref.	Description	OE-number	Measures
1	863612	silentblock for TCA	857 407 474	di:12.2 do:21.6 (*)	3	63480	ball joint lower left	855 407 365 B	c:17
2	863614	silentblock for TCA	8A0 407 181	di:10.1 do:37.1 (*)	4	63481	ball joint lower right	855 407 366 B	c:17

Copyright 2021

VOLKSWAGEN
PASSAT

PASSAT III (3A2, 35I) 02/1988 - 08/1996
PASSAT III VARIANT (3A5, 35I) 02/1988 - 05/1997

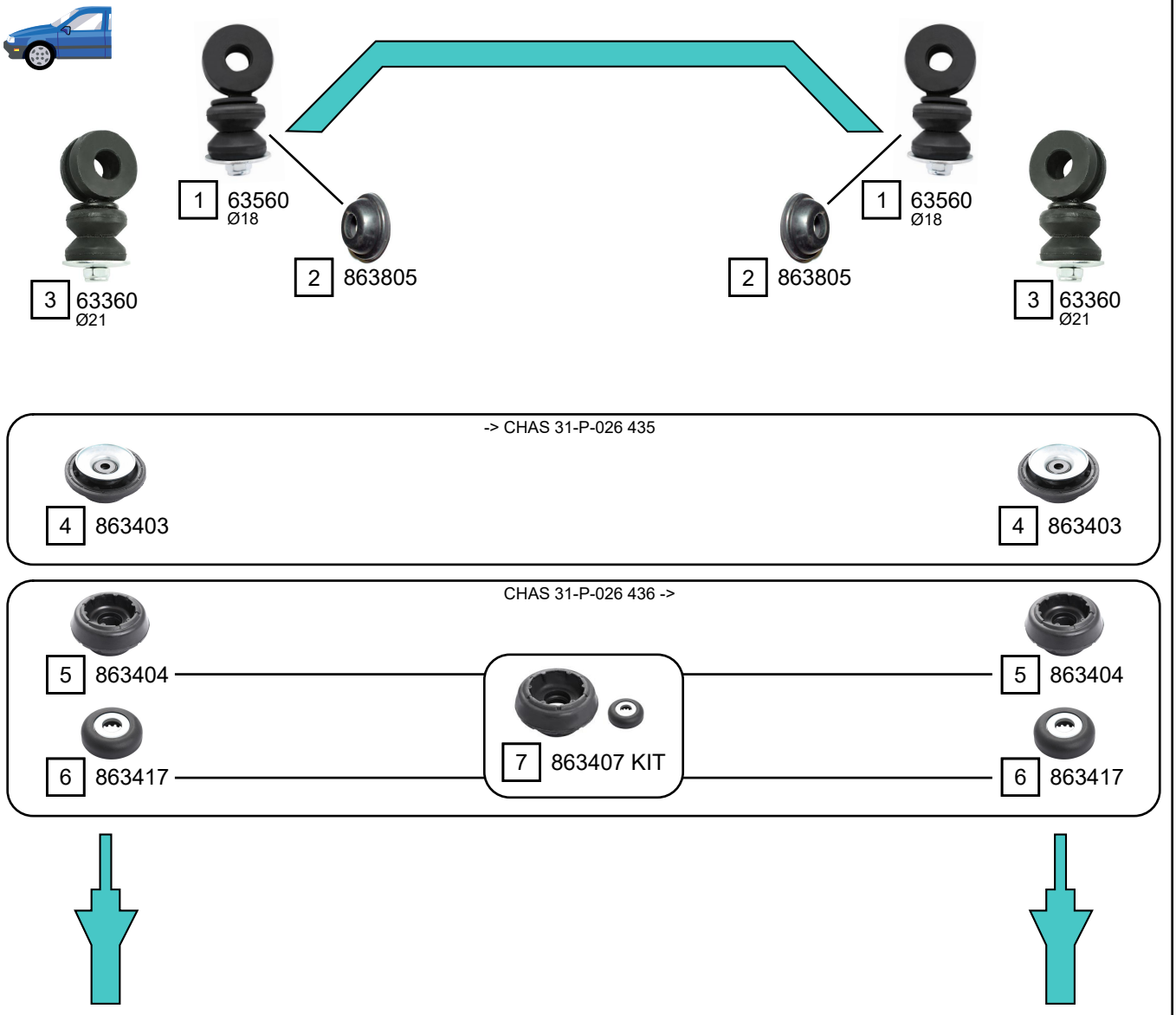

Ref.	Sidem Ref.	Description	OE-number	Measures	Ref.	Sidem Ref.	Description	OE-number	Measures
1	63560	stabiliser link	357 411 315 C	L:81	5	863404	strut mount	7M0 412 331	di:26.5 do:96.7 L:50
2	863805	stabiliser mounting	357 411 329	di:13	6	863417	bearing	1J0 412 249	di:14.3 do:45.3 L:13.4
3	63360	stabiliser link	357 411 315 D	L:81	7	863407 KIT	strut mount kit	7M0 412 331 S1	di:14.3 do:98 L:50
4	863403	strut mount	357 412 329	di:14 do:127 L:55					

Copyright 2021

VOLKSWAGEN
PASSAT

PASSAT III (3A2, 35I) 02/1988 - 08/1996
PASSAT III VARIANT (3A5, 35I) 02/1988 - 05/1997

EXC. 2.0 16V/2.8-2.9 VR6

MS

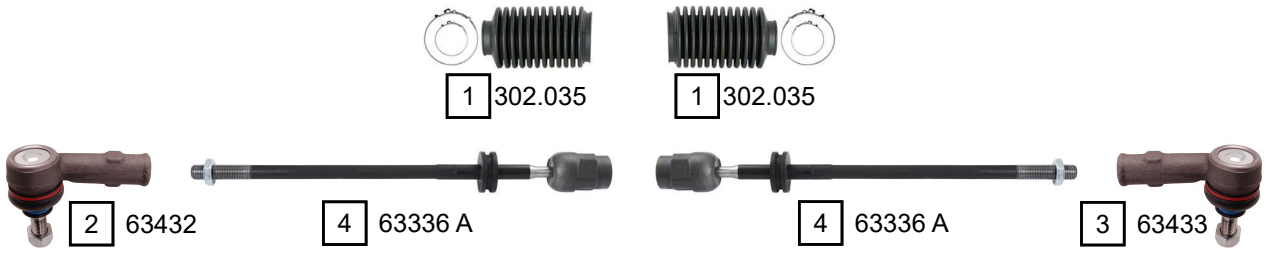

PS TRW -> CHAS 3A-R-099-264

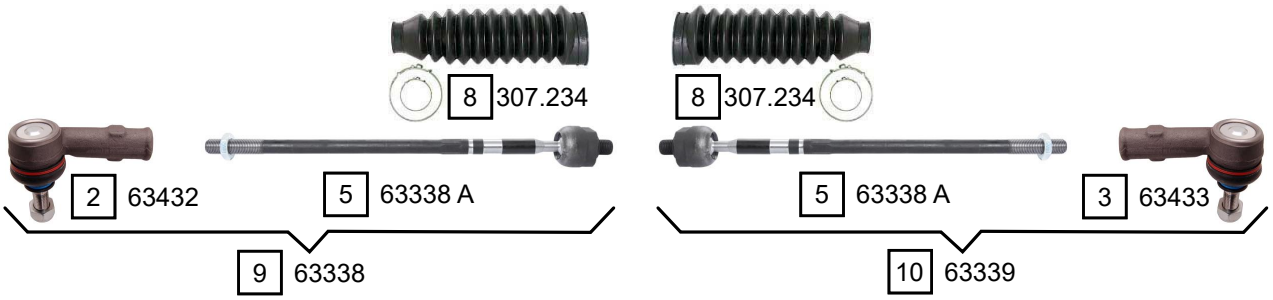

PS TRW CHAS 3A-R-099-265 ->

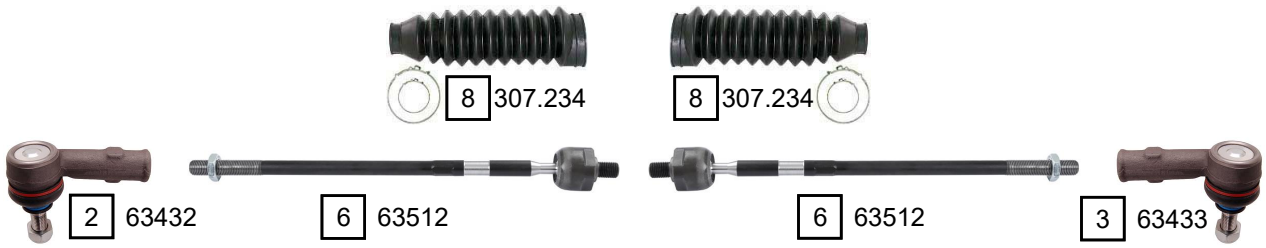

PS ZF -> CHAS 3A-R-099-264

Ref.	Sidem Ref.	Description	OE-number	Measures	Ref.	Sidem Ref.	Description	OE-number	Measures
1	302.035	steering rack gaiter	191 419 831	D:41 d:25 L:120	6	63512	axial joint	Part of	th:MM14X1.5R L:358
2	63432	tie rod end left	6N0 419 811	c:12.6 th:FM14x1.5R	7	63534 A	axial joint	Part of	th:MM14X1.5R L:364.5
3	63433	tie rod end right	6N0 422 812	c:12.6 th:FM14x1.5R	8	307.234	steering rack gaiter	1H0 422 831 B	D:41 d:10 L:210
4	63336 A	axial joint	Part of	th:FM22X1.5R L:385	9	63338	tie rod left	357 422 803	c:12.6
5	63338 A	axial joint	Part of	th:MM14X1.5R L:360	10	63339	tie rod right	357 422 804	c:12.6

Copyright 2021

VOLKSWAGEN
PASSAT

PASSAT III (3A2, 35I) 02/1988 - 08/1996
PASSAT III VARIANT (3A5, 35I) 02/1988 - 05/1997

-> CHAS 31-N-250-989

CHAS 31-N-250-990 ->

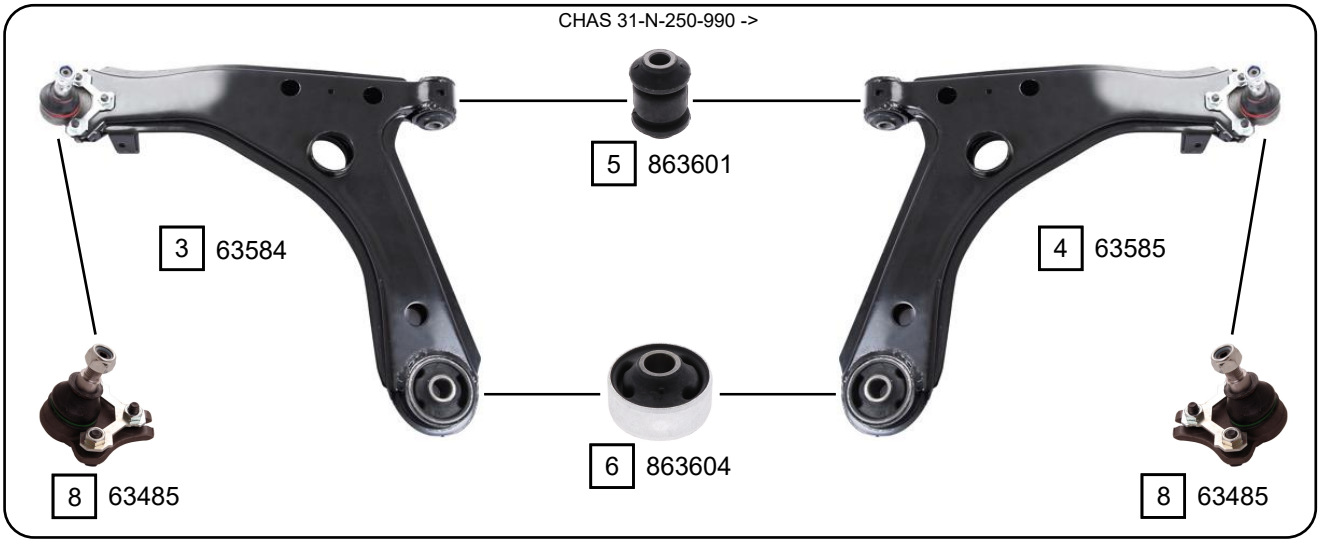

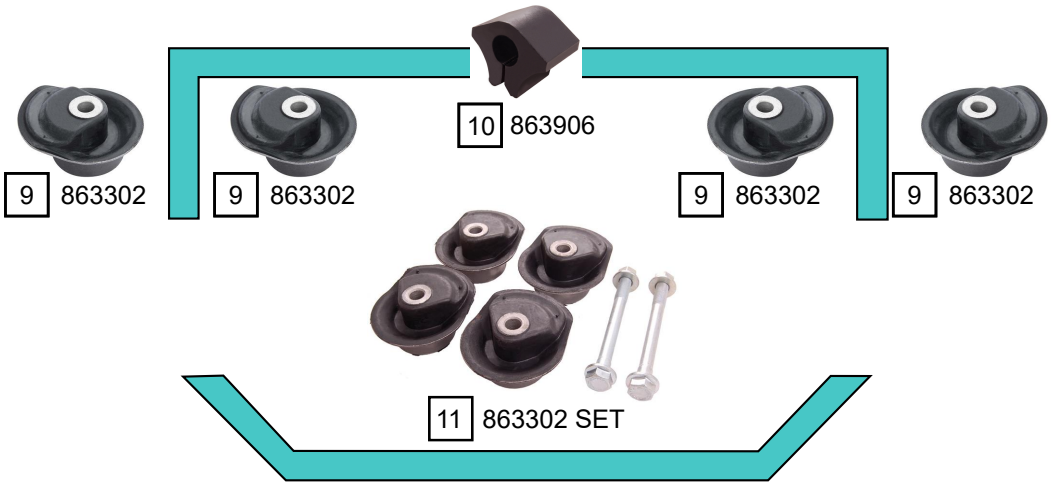

Ref.	Sidem Ref.	Description	OE-number	Measures	Ref.	Sidem Ref.	Description	OE-number	Measures
1	63470	TCA left wbj	357 407 151	c:19	7	63483	ball joint lower	357 407 365 A	c:19
2	63471	TCA right wbj	357 407 151	c:19	8	63485	ball joint lower	1H0 407 365	c:16.5
3	63584	TCA left wbj	1H0 407 151 A S1	c:16.5	9	863302	mounting axle body	3A0 501 541	di:12.2 do:56.3
4	63585	TCA right wbj	1H0 407 152 S1	c:16.5	10	863906	stabiliser mounting	871 511 423	di:16.5
5	863601	silentblock for TCA	357 407 182	di:12 do:32.6 (*)	11	863302 SET	mounting axle body set	3A0 501 541 S1	di:12.2 do:56.3
6	863604	silentblock for TCA	191 407 181 D	di:17 do:60.1 (*)					

Copyright 2021

VOLKSWAGEN
PASSAT

PASSAT IV (3B2) 08/1996 - 10/2000
PASSAT IV VARIANT (3B5) 06/1997 - 11/2000

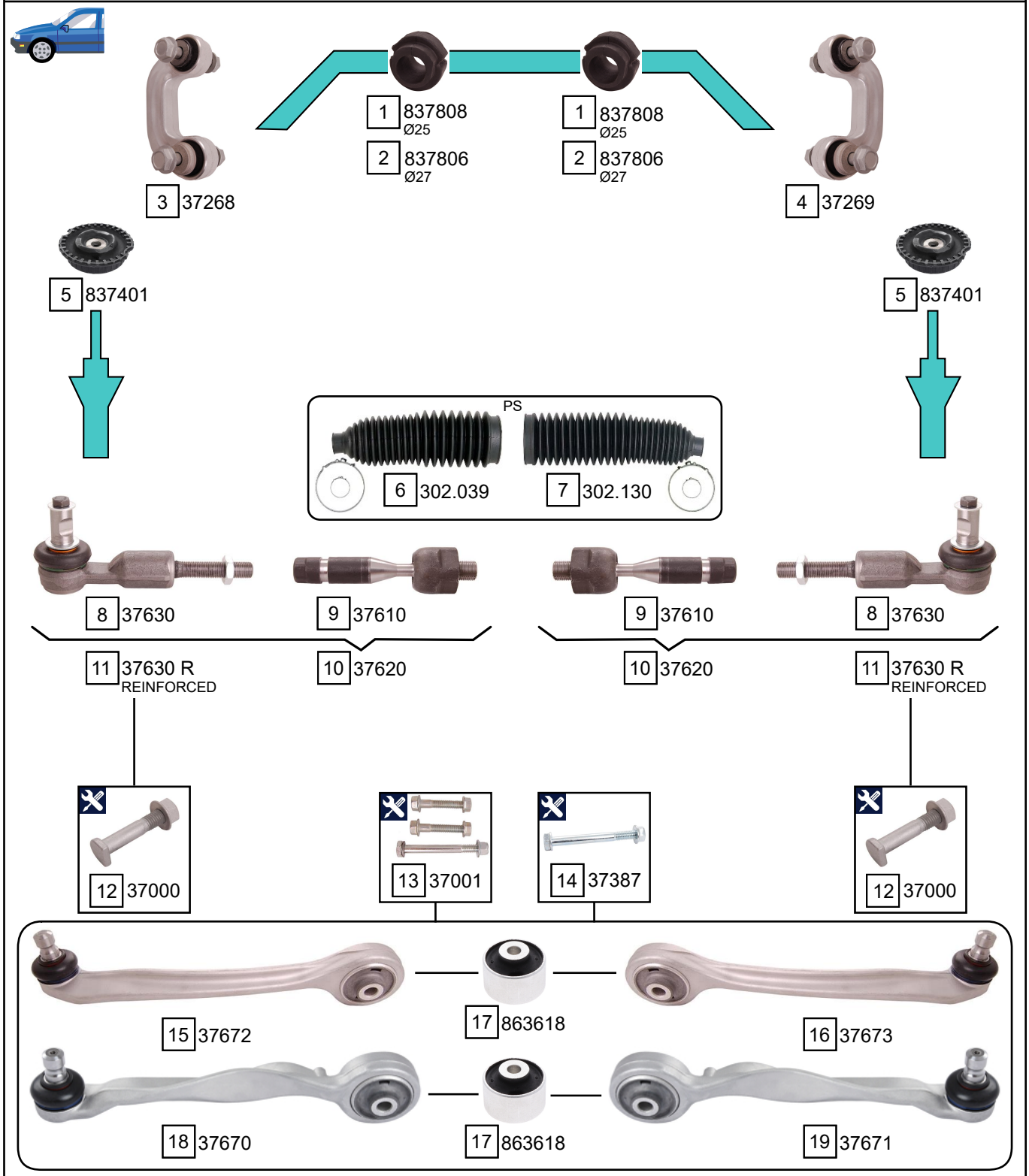

Ref.	Sidem Ref.	Description	OE-number	Measures	Ref.	Sidem Ref.	Description	OE-number	Measures
1	837808	stabiliser mounting	4D0 411 327 G	di:24.5	11	37630 R	tie rod end	4F0 419 811 E R	c:17.5 th:MM14X1.5R
2	837806	stabiliser mounting	4D0 411 327 H	di:27	12	37000	mounting kit	4D0 407 192 C S1	th:M10x1.5R
3	37268	stabiliser link left	8D0 411 317 D	L:90	13	37001	mounting kit	N 105 768 02 S1	th:M10x1.5R
4	37269	stabiliser link right	8D0 411 318 D	L:90	14	37387	mounting kit	N 102 861 02 S1	th:MM10x1.5R L:72
5	837401	strut mount	4D0 412 377 F	di:12.1 do:87 L:36	15	37672	TCA left wbj	8E0 407 505 P	c:16
6	302.039	steering rack gaiter	4D0 419 831 E	D:54 d:18 L:205	16	37673	TCA right wbj	8E0 407 506 P	c:16
7	302.130	steering rack gaiter	8D0 419 831 K	D:65 d:18 L:255	17	863618	silentblock for TCA	8D0 407 515 C	di:10 do:46.5 (*)
8	37630	tie rod end	4F0 419 811 E	c:17.5 th:MM14X1.5R	18	37670	TCA left wbj	4D0 407 509 K	c:16
9	37610	axial joint	8E0 422 821	th:MM16X1.5R L:128	19	37671	TCA right wbj	4D0 407 510 K	c:16
10	37620	tie rod	4B0 419 801 M	c:17.5 L:250					

Copyright 2021

PASSAT IV (3B2) 08/1996 - 10/2000
PASSAT IV VARIANT (3B5) 06/1997 - 11/2000

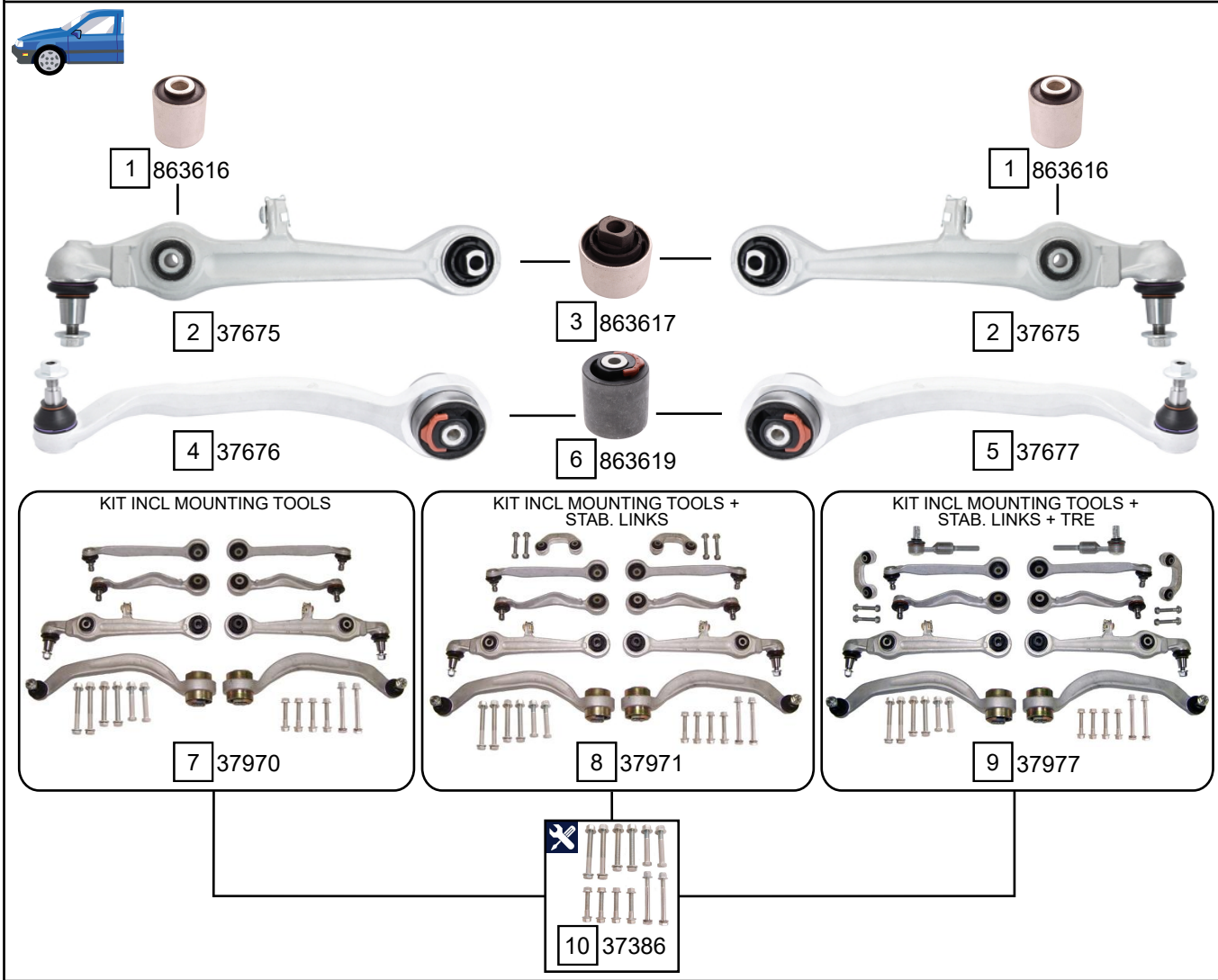

Ref.	Sidem Ref.	Description	OE-number	Measures	Ref.	Sidem Ref.	Description	OE-number	Measures
1	863616	silentblock for TCA	4D0 407 181 H	di:12.2 do:40.2 (*)	8	37971	set TCA + stab. link	4D0 407 509 K S2	
2	37675	TCA wbj	4D0 407 151 P	c:20.5	9	37977	set TCA + stab. link + tre	4D0 407 509 K S3	
3	863617	silentblock for TCA	4D0 407 182 G	di:12.2 do:50.4 (*)	10	37386	mounting kit	Part of	
4	37676	TCA left wbj	8E0 407 693 AG	c:15.5	11	837500	strut mount	8E0 513 353 B	di:10.2 do:75 L:78
5	37677	TCA right wbj	8E0 407 694 AG	c:15.5	12	863710	mounting axle body	4B0 501 521 D	di:15.3
6	863619	silentblock for TCA	4D0 407 183 AC	di:12.2 do:65 (*)	13	863711	mounting axle body	4B0 501 522 D	di:15.3
7	37970	set TCA	4D0 407 509 K S1						

Copyright 2021

VOLKSWAGEN
PASSAT

PASSAT IV (3B2) 08/1996 - 10/2000
PASSAT IV VARIANT (3B5) 06/1997 - 11/2000

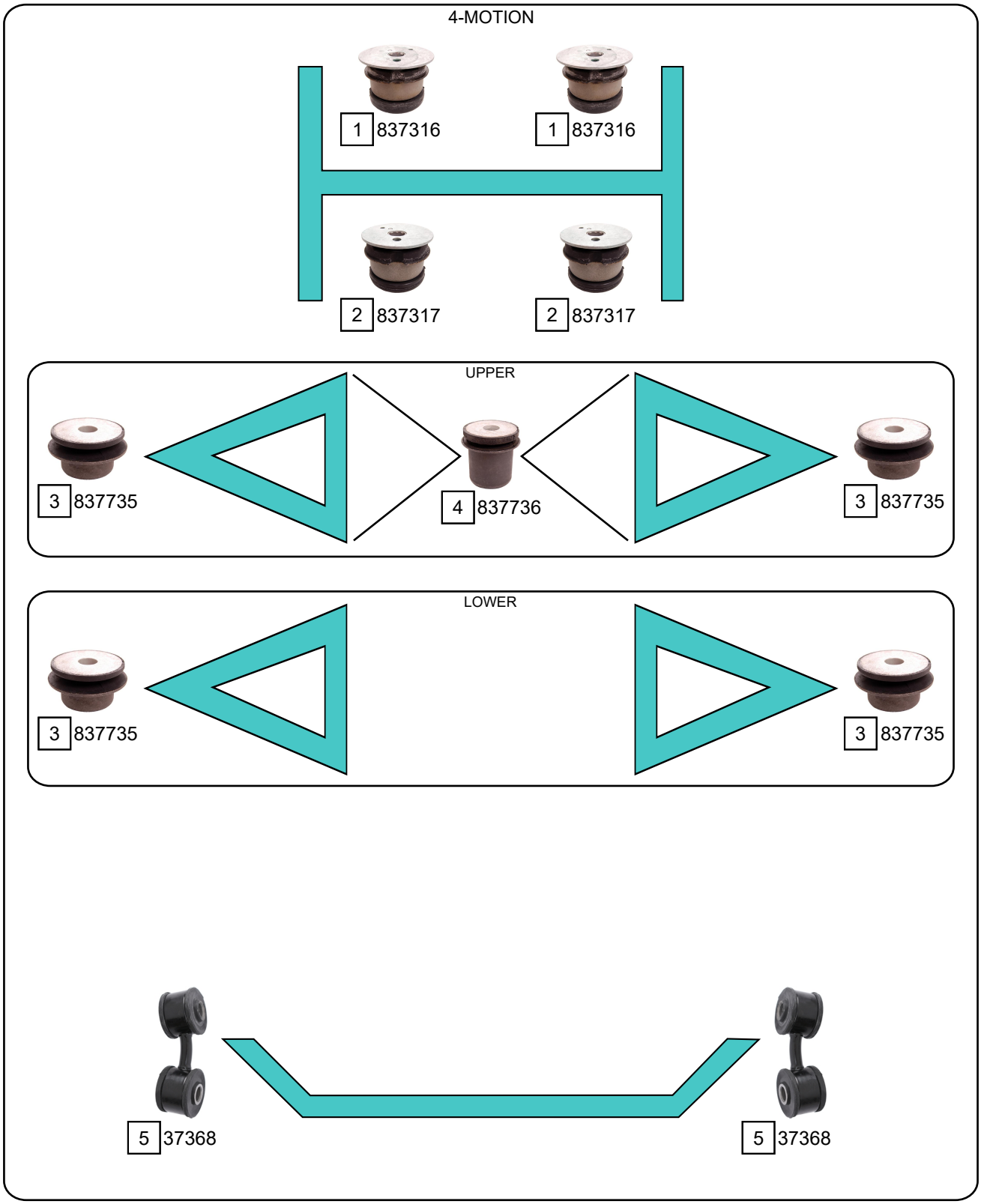

Ref.	Sidem Ref.	Description	OE-number	Measures	Ref.	Sidem Ref.	Description	OE-number	Measures
1	837316	mounting axle body	8E0 505 145 L	di:18 do:82	4	837736	silentblock for TCA	8E0 505 185 C	di:12.1 do:36.3 (*)
2	837317	mounting axle body	8E0 505 145	di:18 do:81	5	37368	stabiliser link rear axle	8E0 505 465 D	L:63
3	837735	silentblock for TCA	8E0 505 172 A	di:12.1 do:36.1 (*)					

Copyright 2021

PASSAT V (3B3)
PASSAT V VARIANT (3B6)

11/2000 - 02/2005

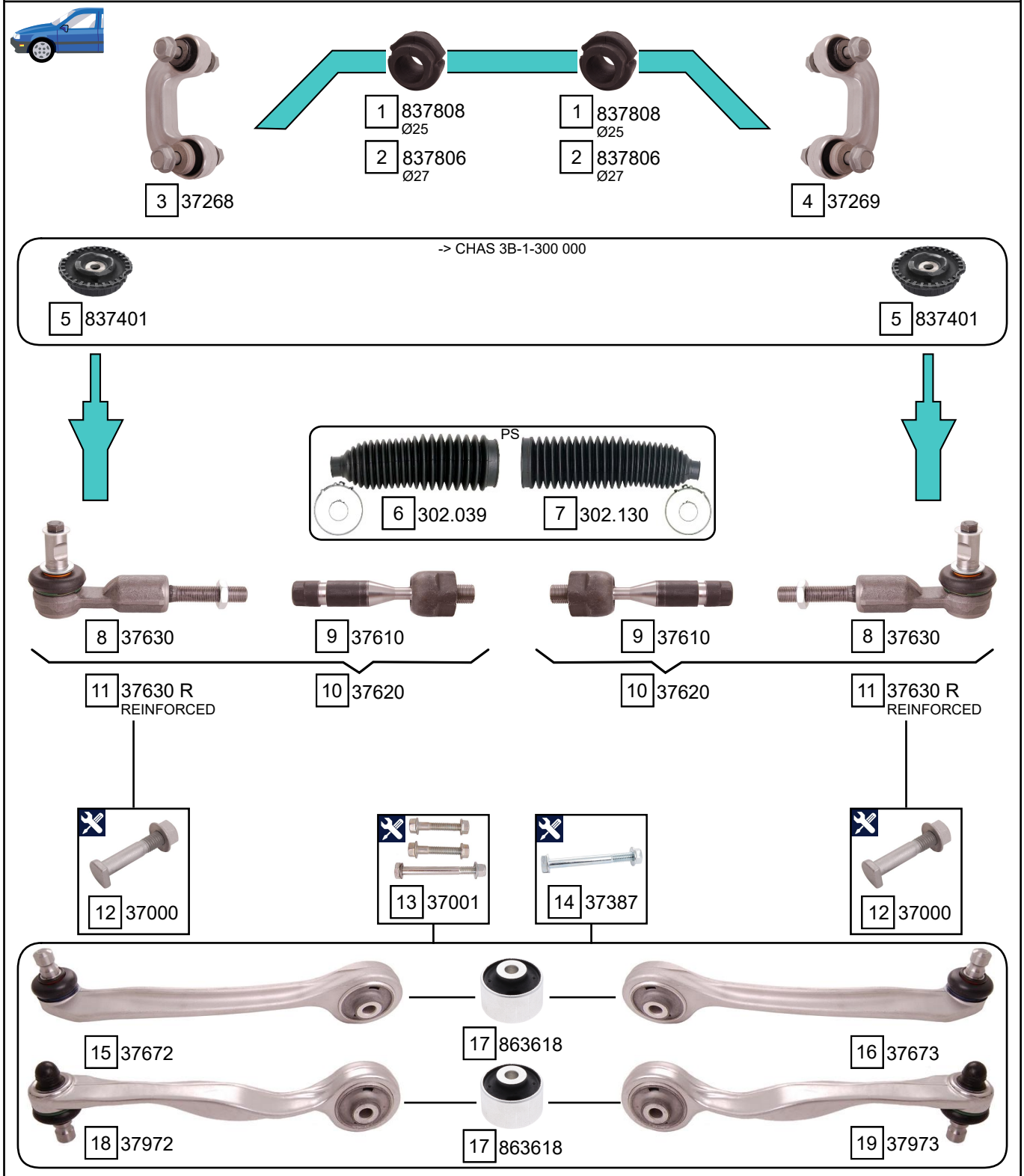

Ref.	Sidem Ref.	Description	OE-number	Measures	Ref.	Sidem Ref.	Description	OE-number	Measures
1	837808	stabiliser mounting	4D0 411 327 G	di:24.5	11	37630 R	tie rod end	4F0 419 811 E R	c:17.5 th:MM14X1.5R
2	837806	stabiliser mounting	4D0 411 327 H	di:27	12	37000	mounting kit	4D0 407 192 C S1	th:M10x1.5R
3	37268	stabiliser link left	8D0 411 317 D	L:90	13	37001	mounting kit	N 105 768 02 S1	th:M10x1.5R
4	37269	stabiliser link right	8D0 411 318 D	L:90	14	37387	mounting kit	N 102 861 02 S1	th:MM10x1.5R L:72
5	837401	strut mount	4D0 412 377 F	di:12.1 do:87 L:36	15	37672	TCA left wbj	8E0 407 505 P	c:16
6	302.039	steering rack gaiter	4D0 419 831 E	D:54 d:18 L:205	16	37673	TCA right wbj	8E0 407 506 P	c:16
7	302.130	steering rack gaiter	8D0 419 831 K	D:65 d:18 L:255	17	863618	silentblock for TCA	8D0 407 515 C	di:10 do:46.5 (*)
8	37630	tie rod end	4F0 419 811 E	c:17.5 th:MM14X1.5R	18	37972	TCA left wbj	8E0 407 509 P	c:16
9	37610	axial joint	8E0 422 821	th:MM16X1.5R L:128	19	37973	TCA right wbj	8E0 407 510 P	c:16
10	37620	tie rod	4B0 419 801 M	c:17.5 L:250					

Copyright 2021

VOLKSWAGEN
PASSAT

PASSAT V (3B3)
PASSAT V VARIANT (3B6)

11/2000 - 02/2005

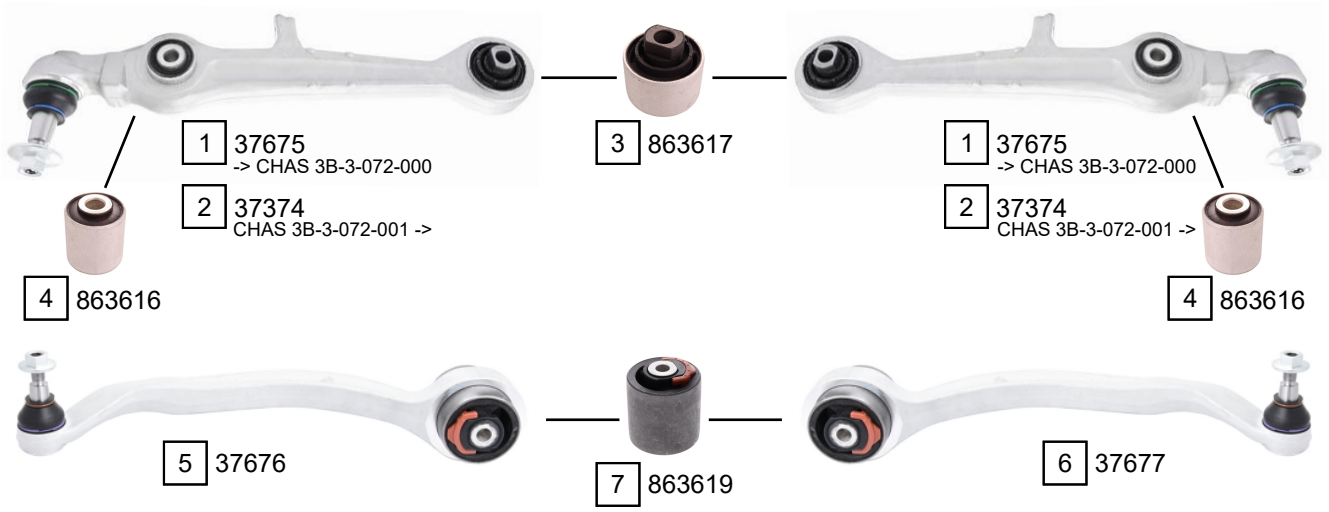

-> CHAS 3B-3-072-000
KIT INCL MOUNTING TOOLS

8 37978

-> CHAS 3B-3-072-000
KIT INCL MOUNTING TOOLS
+ STAB. LINKS

9 37979

-> CHAS 3B-3-072-000
KIT INCL MOUNTING TOOLS
+ STAB. LINKS + TRE

10 37872

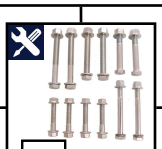

14 37386

CHAS 3B-3-072-001 ->
KIT INCL MOUNTING TOOLS

11 37376

CHAS 3B-3-072-001 ->
KIT INCL MOUNTING TOOLS
+ STAB. LINKS

12 37874

CHAS 3B-3-072-001 ->
KIT INCL MOUNTING TOOLS
+ STAB. LINKS + TRE

13 37873

Ref.	Sidem Ref.	Description	OE-number	Measures	Ref.	Sidem Ref.	Description	OE-number	Measures
1	37675	TCA wbj	4D0 407 151 P	c:20.5	8	37978	set TCA	8E0 407 509 P S1	
2	37374	TCA wbj	4B3 407 151 E	c:16.2	9	37979	set TCA + stab. link	8E0 407 509 P S2	
3	863617	silentblock for TCA	4D0 407 182 G	di:12.2 do:50.4 (*)	10	37872	set TCA + stab. link + tre	8E0 407 509 P S3	
4	863616	silentblock for TCA	4D0 407 181 H	di:12.2 do:40.2 (*)	11	37376	set TCA	4B3 407 151 E S1	
5	37676	TCA left wbj	8E0 407 693 AG	c:15.5	12	37874	set TCA + stab. link	4B3 407 151 E S2	
6	37677	TCA right wbj	8E0 407 694 AG	c:15.5	13	37873	set TCA + stab. link + tre	4B3 407 151 E S3	
7	863619	silentblock for TCA	4D0 407 183 AC	di:12.2 do:65 (*)	14	37386	mounting kit	Part of	

Copyright 2021

VOLKSWAGEN
PASSAT

PASSAT V (3B3)
PASSAT V VARIANT (3B6)

11/2000 - 02/2005

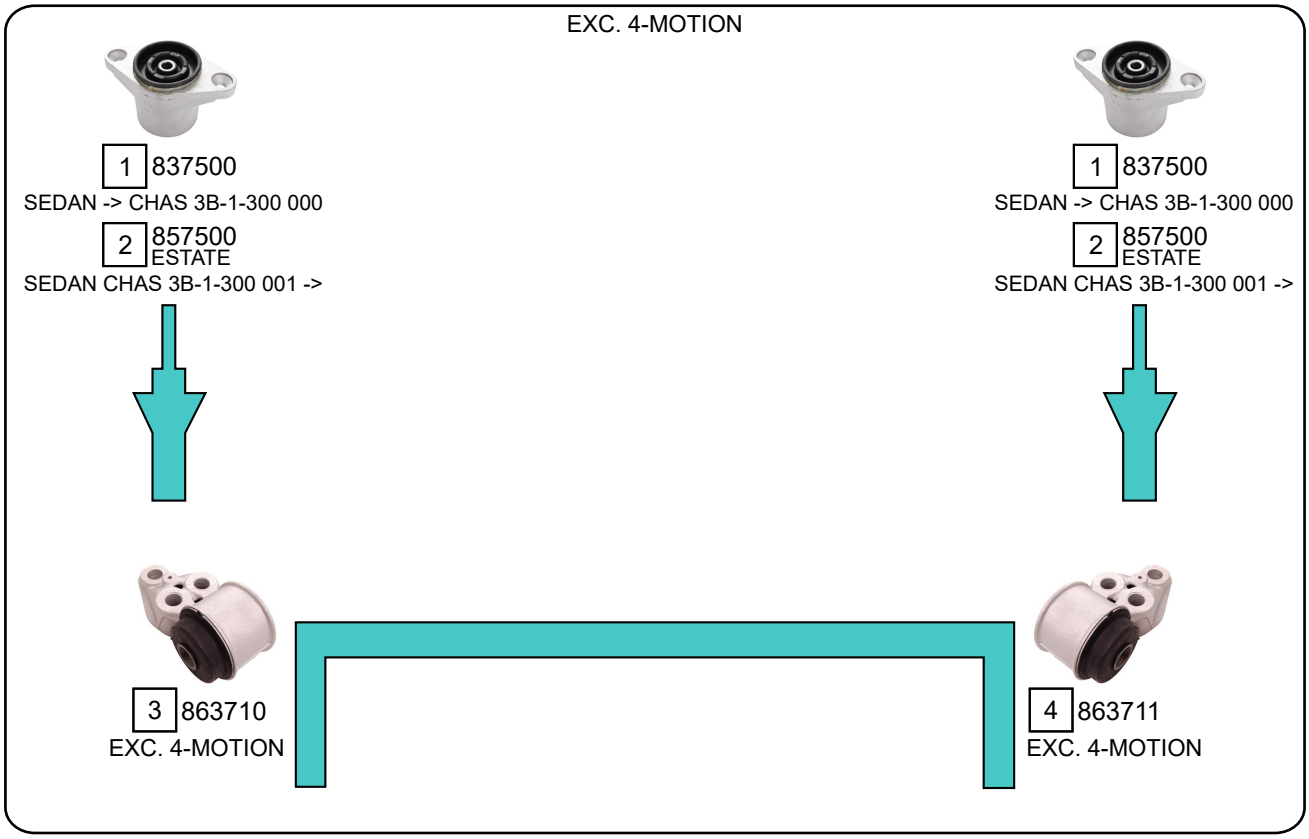

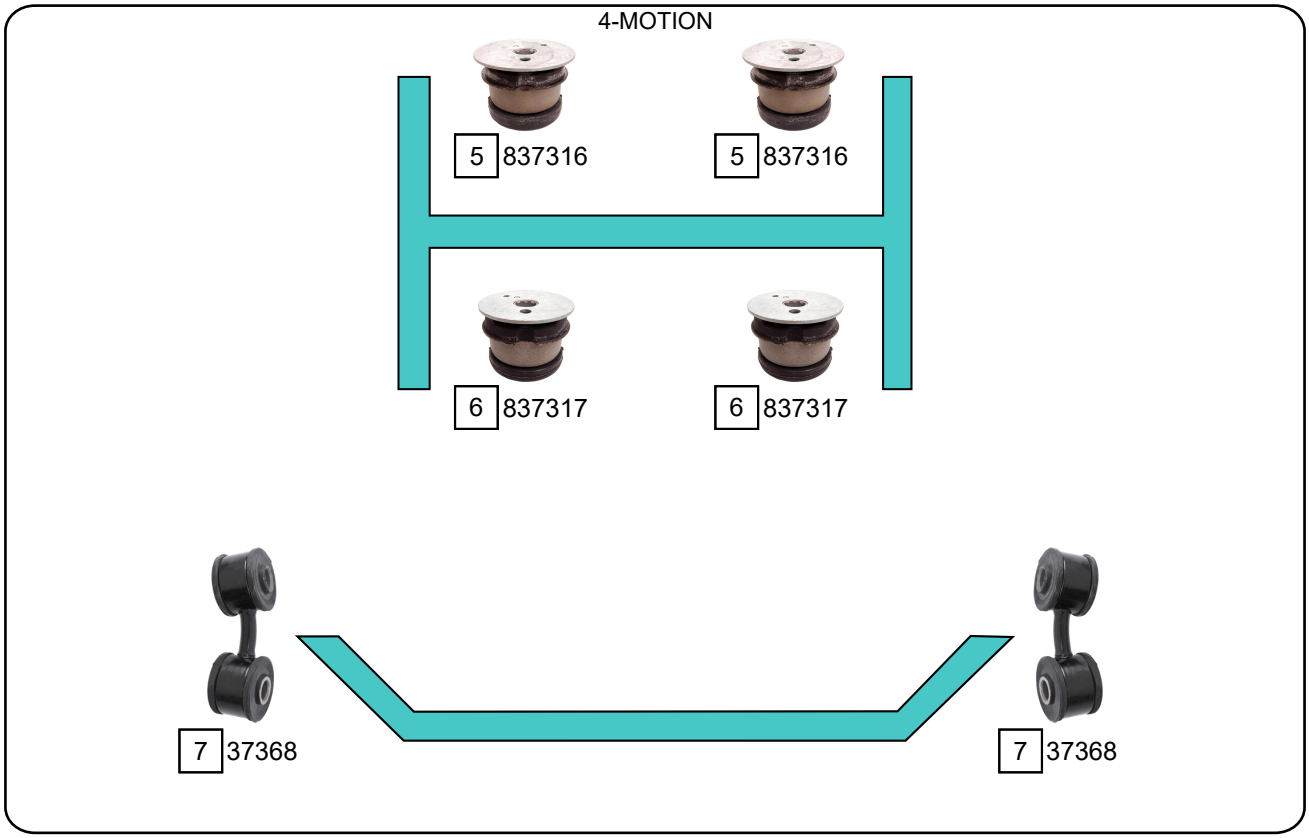

Ref.	Sidem Ref.	Description	OE-number	Measures	Ref.	Sidem Ref.	Description	OE-number	Measures
1	837500	strut mount	8E0 513 353 B	di:10.2 do:75 L:78	5	837316	mounting axle body	8E0 505 145 L	di:18 do:82
2	857500	strut mount	3B0 513 353	di:10 do:73.3 L:77.5	6	837317	mounting axle body	8E0 505 145	di:18 do:81
3	863710	mounting axle body	4B0 501 521 D	di:15.3	7	37368	stabiliser link rear axle	8E0 505 465 D	L:63
4	863711	mounting axle body	4B0 501 522 D	di:15.3					

Copyright 2021

VOLKSWAGEN
PASSAT

PASSAT VI (3C2) 03/2005 - 11/2010
PASSAT VI VARIANT (3C5) 08/2005 - 10/2011

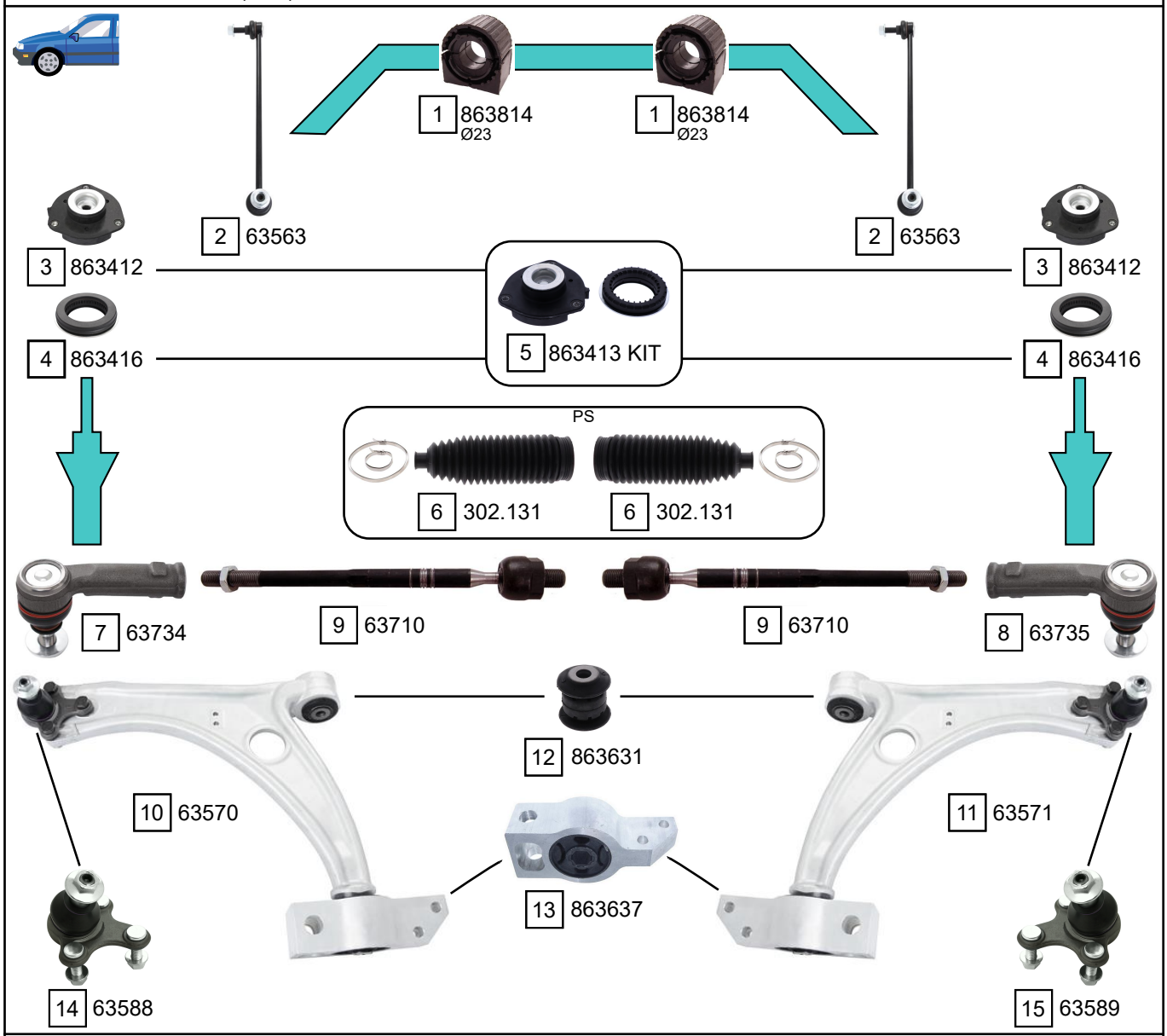

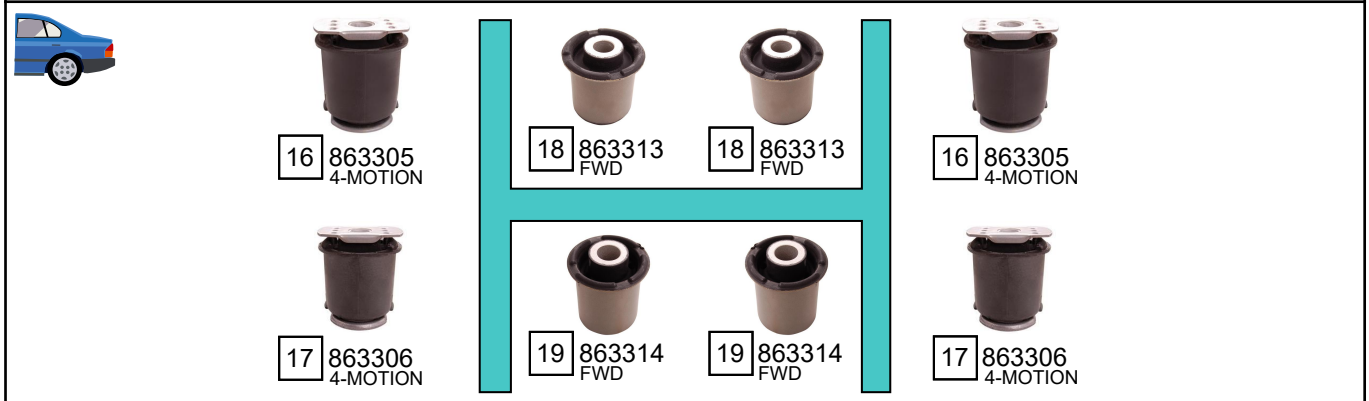

Ref.	Sidem Ref.	Description	OE-number	Measures	Ref.	Sidem Ref.	Description	OE-number	Measures
1	863814	stabiliser mounting	Part of	di:21	11	63571	TCA right wbj	3C0 407 151 G S2	c:15.2
2	63563	stabiliser link	5Q0 411 315 A	L:335	12	863631	silentblock for TCA	1K0 407 182	di:12.1 do:40 (*)
3	863412	strut mount	1K0 412 331 B	di:14.2 L:49.5	13	863637	silentblock for TCA	3C0 199 231 D	di:18.6 (*)
4	863416	bearing	1K0 412 249 B	di:68.5 do:112 L:25.5	14	63588	ball joint left	3C0 407 365 B	c:15.2
5	863413 KIT	strut mount kit	1K0 412 331 B S1	di:14.2 L:50	15	63589	ball joint right	3C0 407 366 B	c:15.2
6	302.131	steering rack gaiter	1K0 423 831 A	D:50 d:15 L:193	16	863305	mounting axle body	1K0 505 145 J	di:18 do:70
7	63734	tie rod end left	1K0 423 811 J S2	c:13.2 th:FM16X1.5R	17	863306	mounting axle body	1K0 505 145 K	di:18 do:70
8	63735	tie rod end right	1K0 423 812 J S2	c:13.2 th:FM16X1.5R	18	863313	mounting axle body	3C0 505 145	di:18 do:60.6
9	63710	axial joint	1K0 423 810 A	th:MM16X1.5R L:312	19	863314	mounting axle body	3C0 505 145 A	di:18 do:54.2
10	63570	TCA left wbj	3C0 407 151 G S1	c:15.2					

Copyright 2021

VOLKSWAGEN
PASSAT

PASSAT VI (3C2) 03/2005 - 11/2010
PASSAT VI VARIANT (3C5) 08/2005 - 10/2011

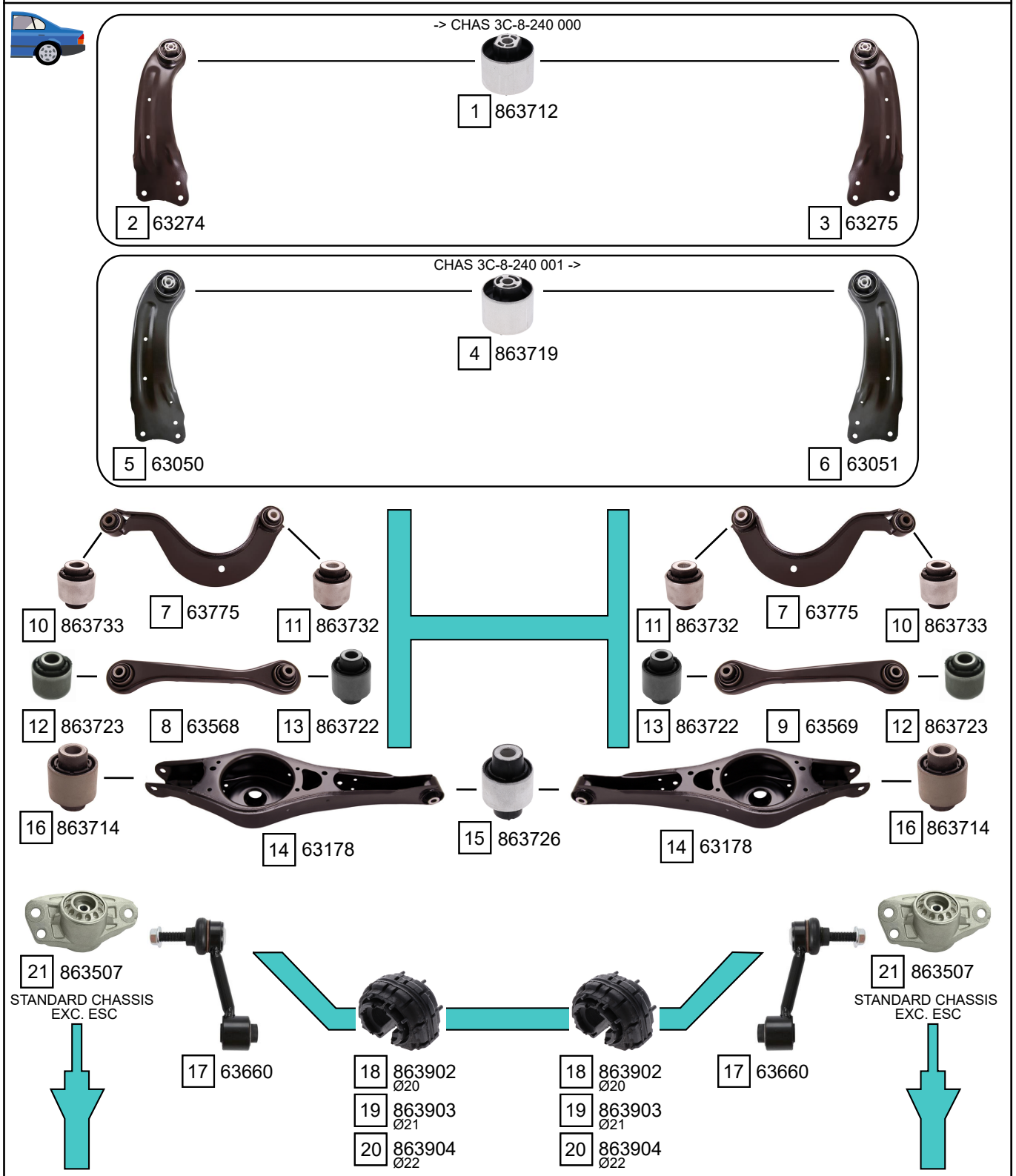

Ref.	Sidem Ref.	description	OE-number	measures	Ref.	Sidem Ref.	description	OE-number	measures
1	863712	silentblock for TCA	1K0 505 541 B	di:12.2 do:60.2 (*)	12	863723	silentblock for TCA	Part of	di:14.2 do:40.1 (*)
2	63274	TCA left	3C0 505 223 D	L:376	13	863722	silentblock for TCA	Part of	di:12.1 do:40.4 (*)
3	63275	TCA right	3C0 505 224 D	L:376	14	63178	TCA	1K0 505 311 AB	
4	863719	mounting axle body	3C0 505 541	di:12.2 do:60.2 (*)	15	863726	silentblock for TCA	Part of	di:12.1 do:42 (*)
5	63050	TCA left	3C0 505 223 E	L:376.5	16	863714	silentblock for TCA	1K0 505 553 A	di:12.2 do:37.4 (*)
6	63051	TCA right	3C0 505 224 E	L:376.5	17	63660	stabiliser link rear axle	1K0 505 465 K	L:95
7	63775	track rod	1K0 505 323 N	L:305.5	18	863902	stabiliser mounting	1K0 511 327 AQ	di:19
8	63568	track rod	1K0 501 529 F	L:298	19	863903	stabiliser mounting	1K0 511 327 AR	di:18.5
9	63569	track rod	1K0 501 530 C	L:298	20	863904	stabiliser mounting	1K0 511 327 AS	di:19.5
10	863733	silentblock for TCA	Part of	di:14.3 do:38.2 (*)	21	863507	strut mount	3C0 513 353 C	di:10.5 do:68 L:62.7
11	863732	silentblock for TCA	Part of	di:12.1 do:38.3 (*)					

Copyright 2021

VOLKSWAGEN
PASSAT

PASSAT VII (362)	08/2010 - 12/2014
PASSAT VII VARIANT (365)	08/2010 - 12/2014
PASSAT VII ALLTRACK (365)	01/2012 - 12/2014

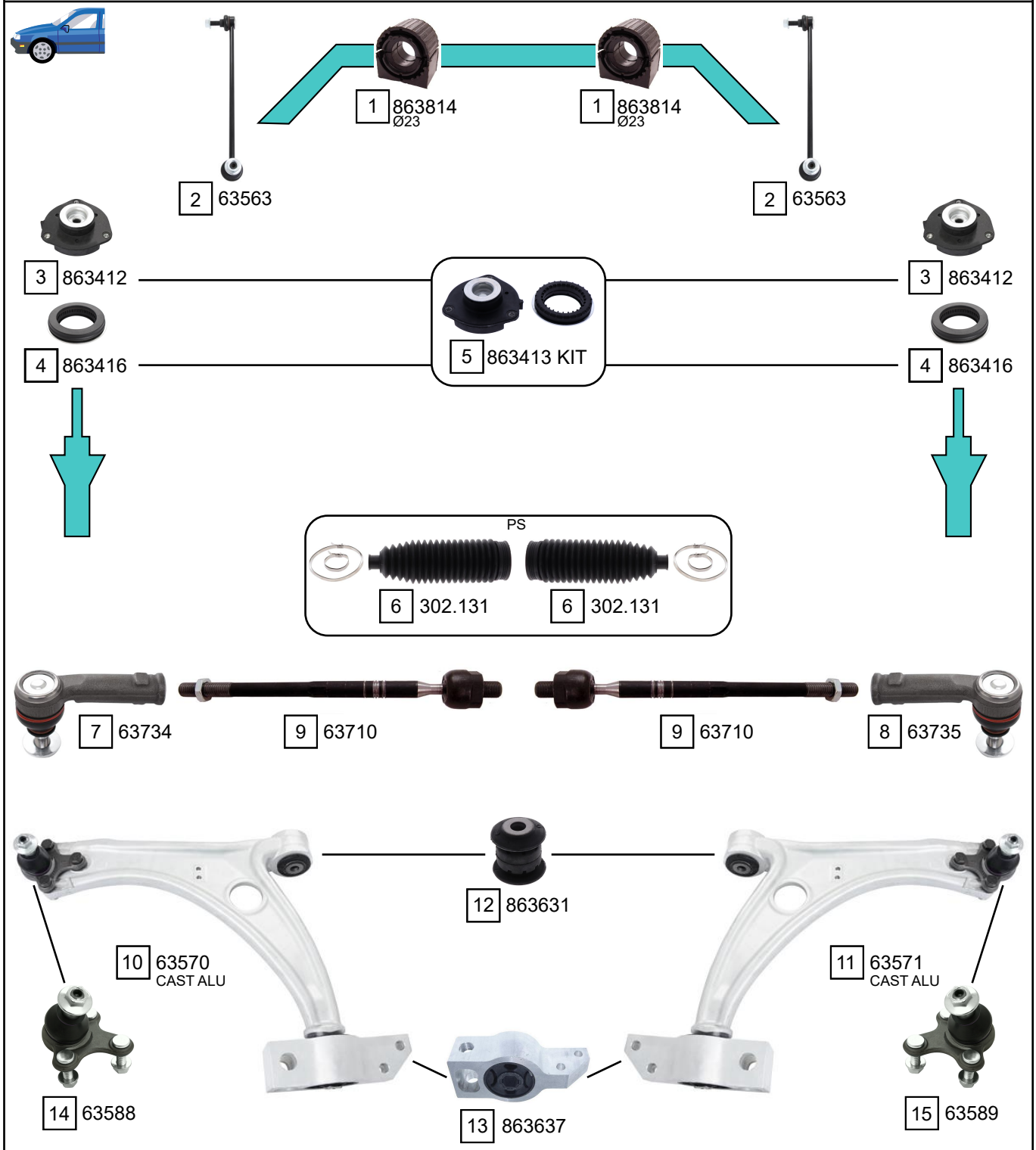

Ref.	Sidem Ref.	Description	OE-number	Measures	Ref.	Sidem Ref.	Description	OE-number	Measures
1	863814	stabiliser mounting	Part of	di:21	9	63710	axial joint	1K0 423 810 A	th:MM16X1.5R L:312
2	63563	stabiliser link	5Q0 411 315 A	L:335	10	63570	TCA left wbj	3C0 407 151 G S1	c:15.2
3	863412	strut mount	1K0 412 331 B	di:14.2 L:49.5	11	63571	TCA right wbj	3C0 407 151 G S2	c:15.2
4	863416	bearing	1K0 412 249 B	di:68.5 do:112 L:25.5	12	863631	silentblock for TCA	1K0 407 182	di:12.1 do:40 (*)
5	863413 KIT	strut mount kit	1K0 412 331 B S1	di:14.2 L:50	13	863637	silentblock for TCA	3C0 199 231 D	di:18.6 (*)
6	302.131	steering rack gaiter	1K0 423 831 A	D:50 d:15 L:193	14	63588	ball joint left	3C0 407 365 B	c:15.2
7	63734	tie rod end left	1K0 423 811 J S2	c:13.2 th:FM16X1.5R	15	63589	ball joint right	3C0 407 366 B	c:15.2
8	63735	tie rod end right	1K0 423 812 J S2	c:13.2 th:FM16X1.5R					

Copyright 2021

VOLKSWAGEN
PASSAT

PASSAT VII (362)	08/2010 - 12/2014
PASSAT VII VARIANT (365)	08/2010 - 12/2014
PASSAT VII ALLTRACK (365)	01/2012 - 12/2014

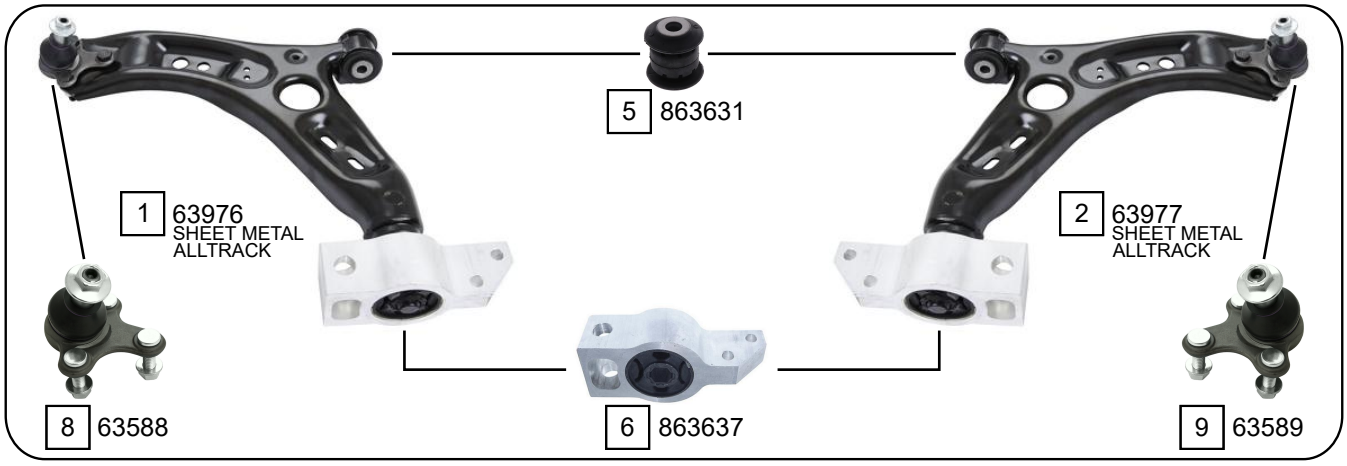

REINFORCED / TAXI

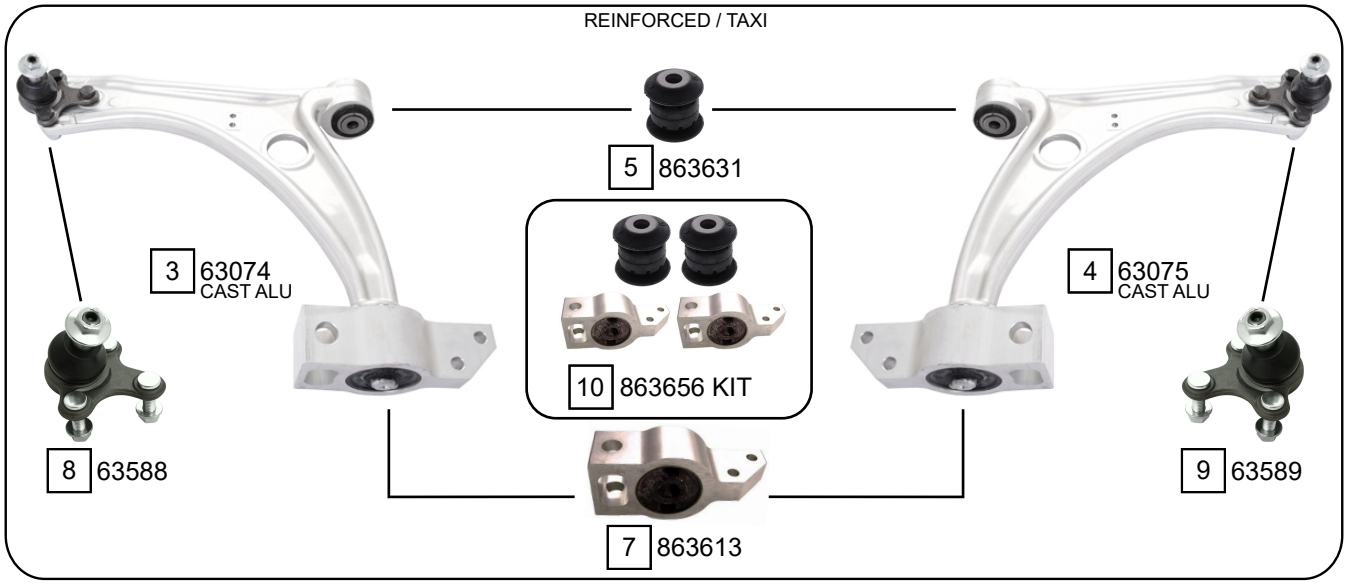

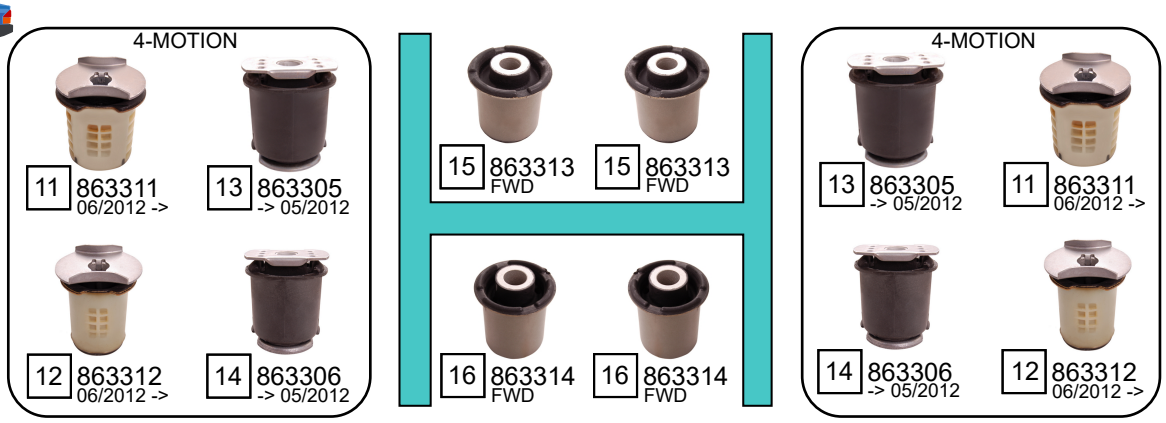

Ref.	Sidem Ref.	Description	OE-number	Measures	Ref.	Sidem Ref.	Description	OE-number	Measures
1	63976	TCA left wbj	5N0 407 151 S2	c:15.2	9	63589	ball joint right	3C0 407 366 B	c:15.2
2	63977	TCA right wbj	5N0 407 152 S2	c:15.2	10	863656 KIT	silentblock kit	3C0 199 231 F S1	
3	63074	TCA left wbj	3C0 407 151 H S1	c:15.2	11	863311	mounting axle body	5Q0 505 145 F	di:18.2 do:61.5
4	63075	TCA right wbj	3C0 407 151 H S2	c:15.2	12	863312	mounting axle body	5Q0 505 145 E	di:18.6 do:53.5
5	863631	silentblock for TCA	1K0 407 182	di:12.1 do:40 (*)	13	863305	mounting axle body	1K0 505 145 J	di:18 do:70
6	863637	silentblock for TCA	3C0 199 231 D	di:18.6 (*)	14	863306	mounting axle body	1K0 505 145 K	di:18 do:70
7	863613	silentblock for TCA	3C0 199 231 F	di:18.6 do:62 (*)	15	863313	mounting axle body	3C0 505 145	di:18 do:60.6
8	63588	ball joint left	3C0 407 365 B	c:15.2	16	863314	mounting axle body	3C0 505 145 A	di:18 do:54.2

Copyright 2021

VOLKSWAGEN
PASSAT

PASSAT VII (362)	08/2010 - 12/2014
PASSAT VII VARIANT (365)	08/2010 - 12/2014
PASSAT VII ALLTRACK (365)	01/2012 - 12/2014

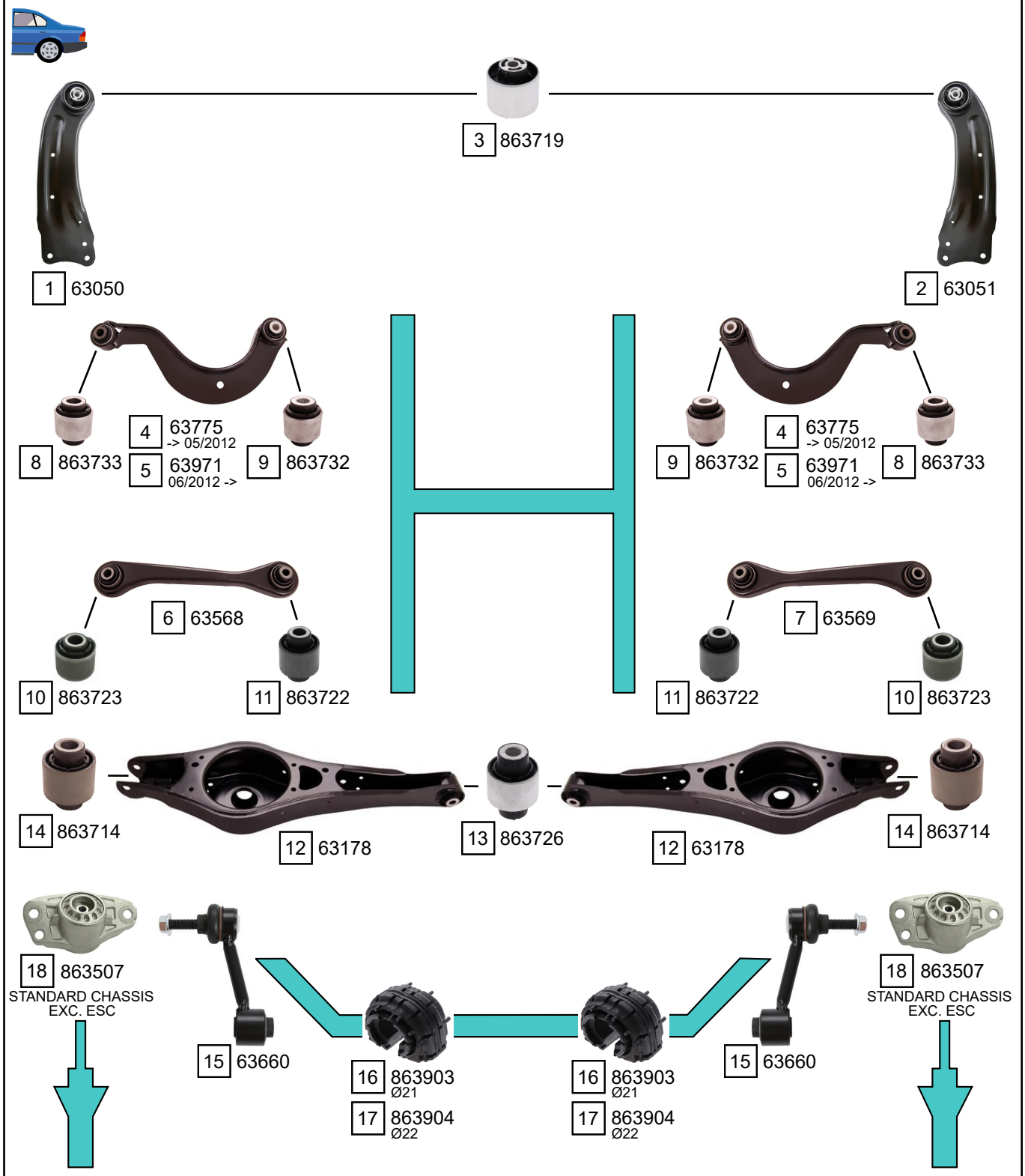

Ref.	Sidem Ref.	Description	OE-number	Measures	Ref.	Sidem Ref.	Description	OE-number	Measures
1	63050	TCA left	3C0 505 223 E	L:376.5	10	863723	silentblock for TCA	Part of	di:14.2 do:40.1 (*)
2	63051	TCA right	3C0 505 224 E	L:376.5	11	863722	silentblock for TCA	Part of	di:12.1 do:40.4 (*)
3	863719	mounting axle body	3C0 505 541	di:12.2 do:60.2 (*)	12	63178	TCA	1K0 505 311 AB	
4	63775	track rod	1K0 505 323 N	L:305.5	13	863726	silentblock for TCA	Part of	di:12.1 do:42 (*)
5	63971	track rod	5Q0 505 323 C	L:305	14	863714	silentblock for TCA	1K0 505 553 A	di:12.2 do:37.4 (*)
6	63568	track rod	1K0 501 529 F	L:298	15	63660	stabiliser link rear axle	1K0 505 465 K	L:95
7	63569	track rod	1K0 501 530 C	L:298	16	863903	stabiliser mounting	1K0 511 327 AR	di:18.5
8	863733	silentblock for TCA	Part of	di:14.3 do:38.2 (*)	17	863904	stabiliser mounting	1K0 511 327 AS	di:19.5
9	863732	silentblock for TCA	Part of	di:12.1 do:38.3 (*)	18	863507	strut mount	3C0 513 353 C	di:10.5 do:68 L:62.7

Copyright 2021

VOLKSWAGEN
PASSAT

PASSAT VIII (3G2, CB2) 08/2014 ->
PASSAT VIII VARIANT (3G5, CB5) 08/2014 ->
PASSAT VIII ALLTRACK (3G5, CB5) 05/2015 ->

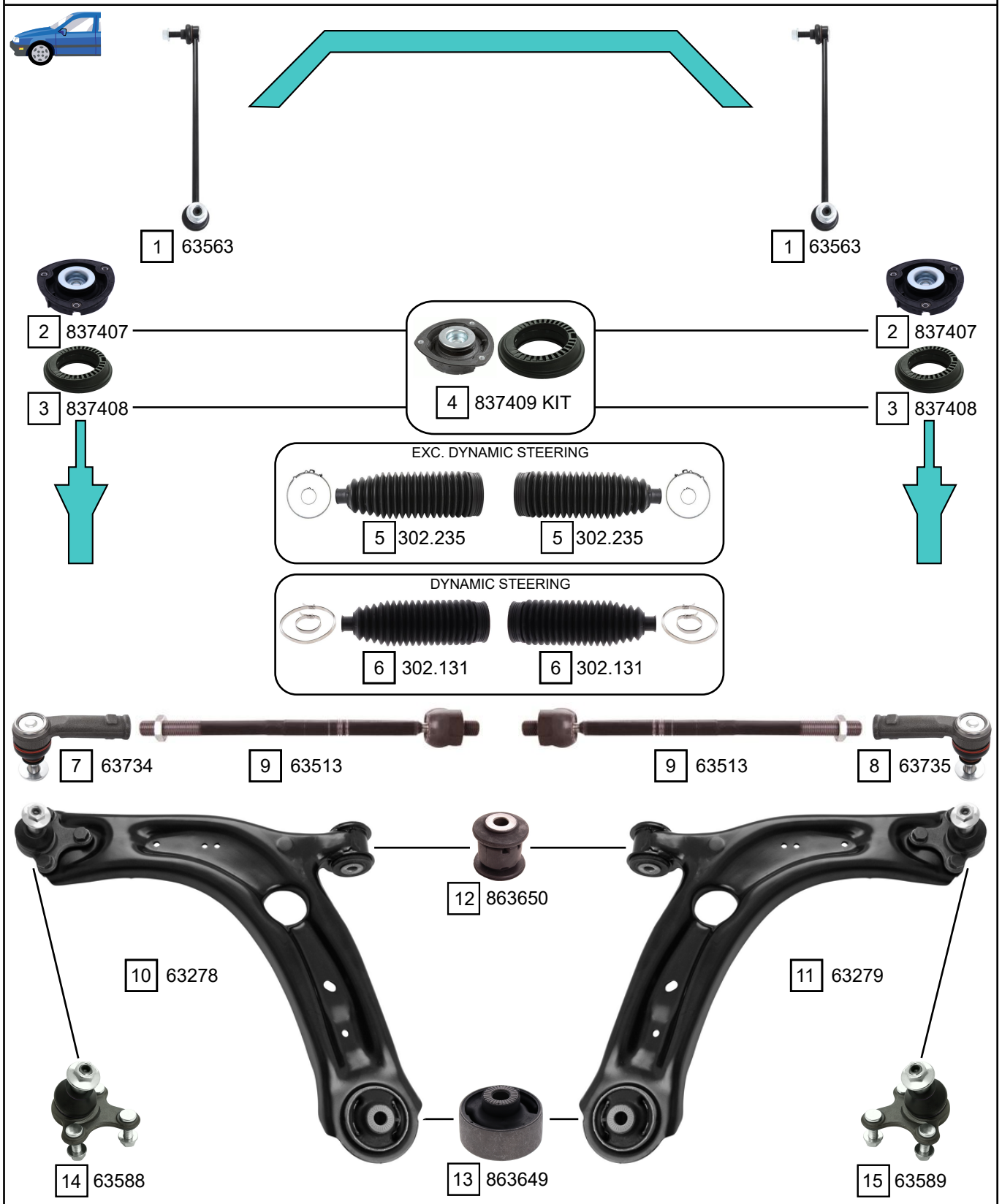

Ref.	Sidem Ref.	Description	OE-number	Measures	Ref.	Sidem Ref.	Description	OE-number	Measures
1	63563	stabiliser link	5Q0 411 315 A	L:335	9	63513	axial joint	561 423 810	th:MM16X1.5R L:330
2	837407	strut mount	5Q0 412 331 E	di:14.6 do:64.1 L:42	10	63278	TCA left wbj	3Q0 407 151 E S1	c:15.2
3	837408	bearing	5Q0 412 249 F	di:74 do:127 L:38.6	11	63279	TCA right wbj	3Q0 407 152 E S1	c:15.2
4	837409 KIT	strut mount kit	5Q0 412 331 E S1	di:14.6 do:127	12	863650	silentblock for TCA	5Q0 407 182	di:12.1 do:40.1 (*)
5	302.235	steering rack gaiter	5Q0 423 831	D:53.5 d:15.5 L:191	13	863649	silentblock for TCA	5Q0 407 183 E	di:12.9 do:65 (*)
6	302.131	steering rack gaiter	1K0 423 831 A	D:50 d:15 L:193	14	63588	ball joint left	3C0 407 365 B	c:15.2
7	63734	tie rod end left	1K0 423 811 J S2	c:13.2 th:FM16X1.5R	15	63589	ball joint right	3C0 407 366 B	c:15.2
8	63735	tie rod end right	1K0 423 812 J S2	c:13.2 th:FM16X1.5R					

Copyright 2021

VOLKSWAGEN
PASSAT

PASSAT VIII (3G2, CB2)	08/2014 ->
PASSAT VIII VARIANT (3G5, CB5)	08/2014 ->
PASSAT VIII ALLTRACK (3G5, CB5)	05/2015 ->

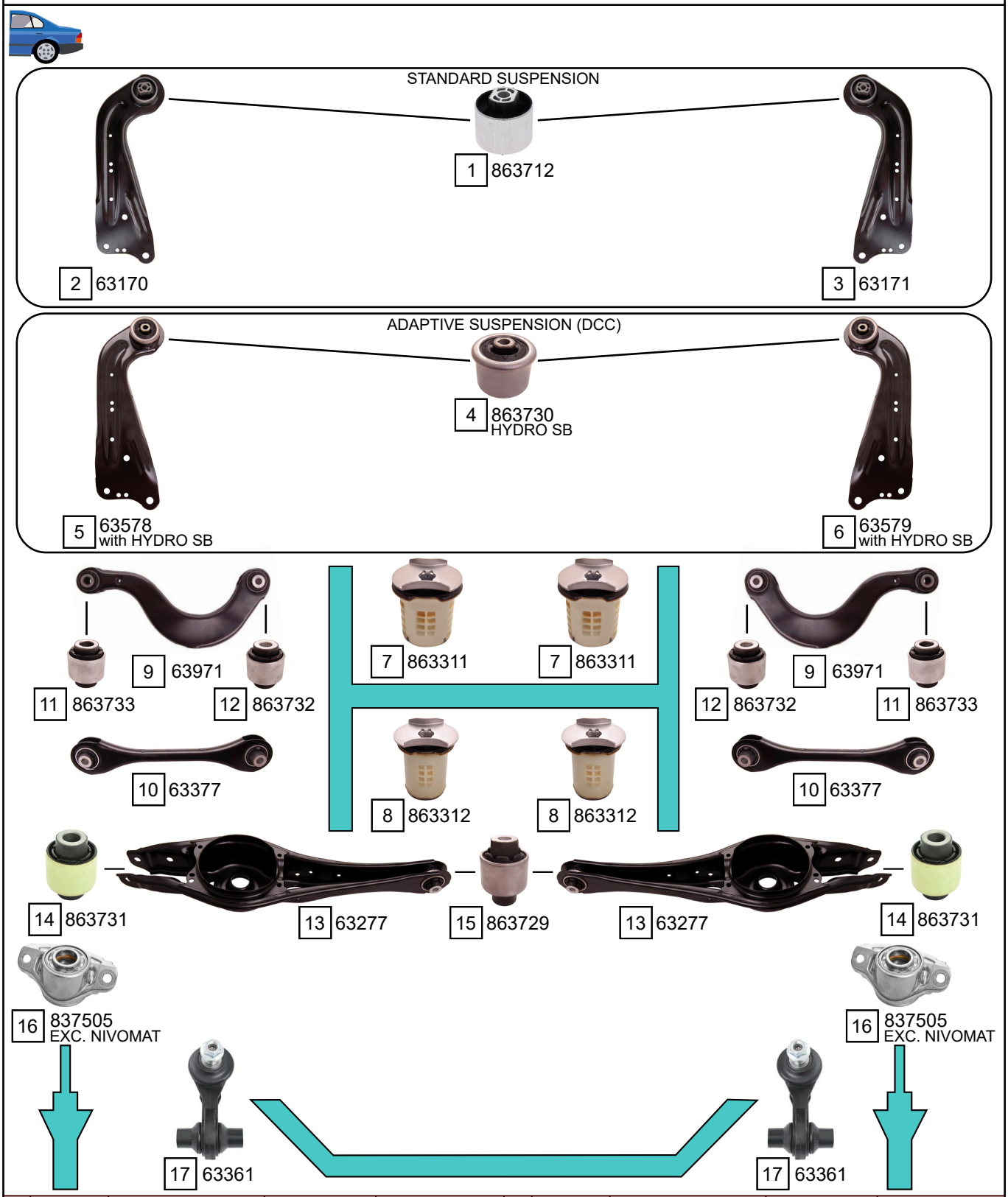

Ref.	Sidem Ref.	Description	OE-number	Measures	Ref.	Sidem Ref.	Description	OE-number	Measures
1	863712	silentblock for TCA	1K0 505 541 B	di:12.2 do:60.2 (*)	10	63377	track rod	5Q0 501 529 F	L:282
2	63170	TCA left	5Q0 505 223 D	L:384	11	863733	silentblock for TCA	Part of	di:14.3 do:38.2 (*)
3	63171	TCA right	5Q0 505 224 D	L:384	12	863732	silentblock for TCA	Part of	di:12.1 do:38.3 (*)
4	863730	silentblock for TCA	3Q0 505 541 A	di:12.1 do:65.2 (*)	13	63277	TCA	3Q0 505 311 G	
5	63578	TCA left	3Q0 505 223		14	863731	silentblock for TCA	5Q0 505 553	di:12.1 do:37.4 (*)
6	63579	TCA right	3Q0 505 224		15	863729	silentblock for TCA	Part of	di:12.1 do:44.3 (*)
7	863311	mounting axle body	5Q0 505 145 F	di:18.2 do:61.5	16	837505	strut mount	5Q0 513 353 G	di:10.2 do:65.8 L:63.3
8	863312	mounting axle body	5Q0 505 145 E	di:18.6 do:53.5	17	63361	stabiliser link rear axle	5Q0 505 465 C	L:70
9	63971	track rod	5Q0 505 323 C	L:305					

Copyright 2021

VOLKSWAGEN
PASSAT

PASSAT CC (357) — 05/2008 - 01/2012
CC (358) — 11/2011 - 12/2016

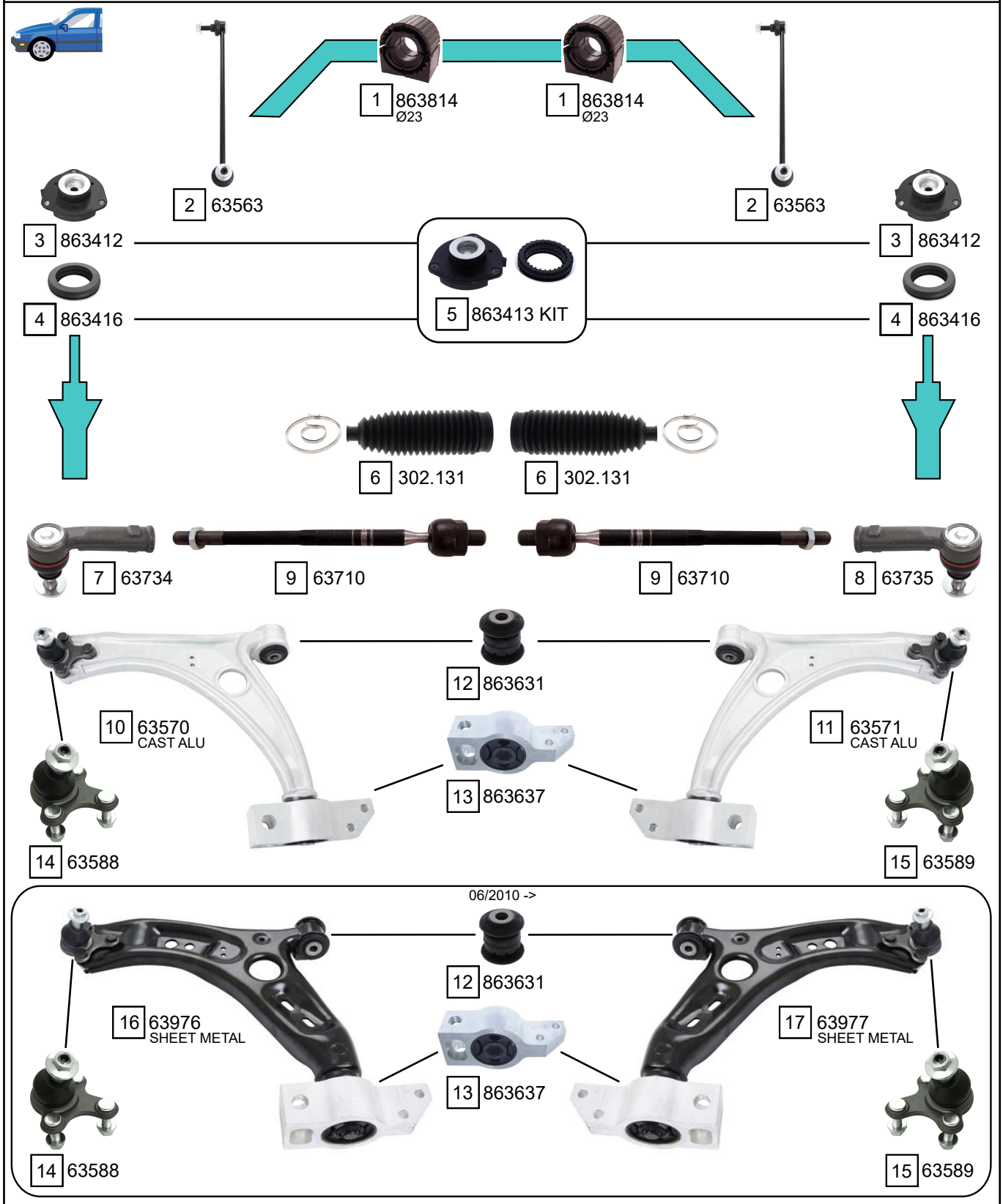

Ref.	Sidem Ref.	Description	OE-number	Measures	Ref.	Sidem Ref.	Description	OE-number	Measures
1	863814	stabiliser mounting	Part of	di:21	10	63570	TCA left wbj	3C0 407 151 G S1	c:15.2
2	63563	stabiliser link	5Q0 411 315 A	L:335	11	63571	TCA right wbj	3C0 407 151 G S2	c:15.2
3	863412	strut mount	1K0 412 331 B	di:14.2 L:49.5	12	863631	silentblock for TCA	1K0 407 182	di:12.1 do:40 (*)
4	863416	bearing	1K0 412 249 B	di:68.5 do:112 L:25.5	13	863637	silentblock for TCA	3C0 199 231 D	di:18.6 (*)
5	863413 KIT	strut mount kit	1K0 412 331 B S1	di:14.2 L:50	14	63588	ball joint left	3C0 407 365 B	c:15.2
6	302.131	steering rack gaiter	1K0 423 831 A	D:50 d:15 L:193	15	63589	ball joint right	3C0 407 366 B	c:15.2
7	63734	tie rod end left	1K0 423 811 J S2	c:13.2 th:FM16X1.5R	16	63976	TCA left wbj	5N0 407 151 S2	c:15.2
8	63735	tie rod end right	1K0 423 812 J S2	c:13.2 th:FM16X1.5R	17	63977	TCA right wbj	5N0 407 152 S2	c:15.2
9	63710	axial joint	1K0 423 810 A	th:MM16X1.5R L:312					

Copyright 2021

VOLKSWAGEN
PASSAT

PASSAT CC (357) 05/2008 - 01/2012
CC (358) 11/2011 - 12/2016

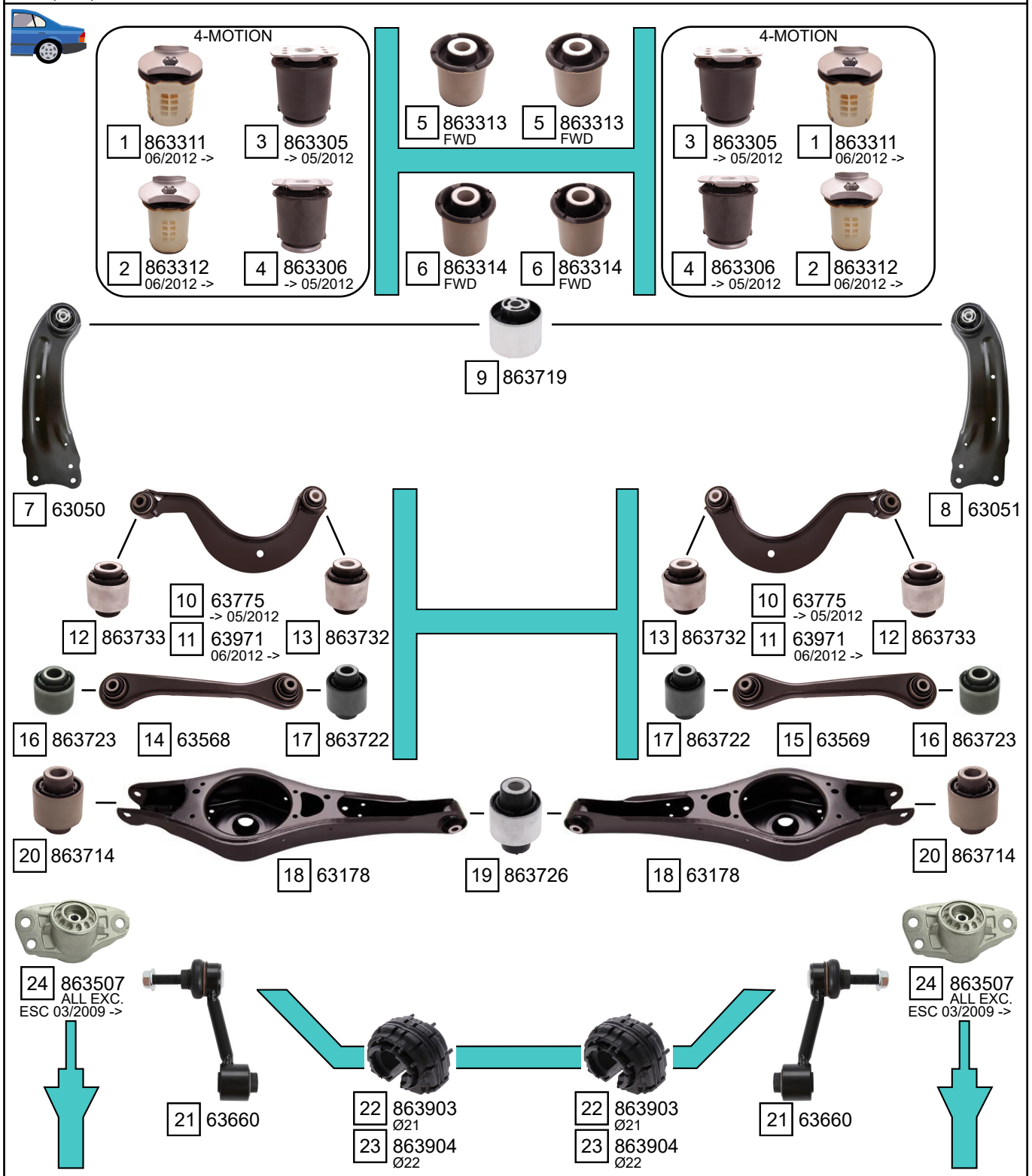

Ref.	Sidem Ref.	Description	OE-number	Measures	Ref.	Sidem Ref.	Description	OE-number	Measures
1	863311	mounting axle body	5Q0 505 145 F	di:18.2 do:61.5	13	863732	silentblock for TCA	Part of	di:12.1 do:38.3 (*)
2	863312	mounting axle body	5Q0 505 145 E	di:18.6 do:53.5	14	63568	track rod	1K0 501 529 F	L:298
3	863305	mounting axle body	1K0 505 145 J	di:18 do:70	15	63569	track rod	1K0 501 530 C	L:298
4	863306	mounting axle body	1K0 505 145 K	di:18 do:70	16	863723	silentblock for TCA	Part of	di:14.2 do:40.1 (*)
5	**863313**	mounting axle body	3C0 505 145	di:18 do:60.6	17	863722	silentblock for TCA	Part of	di:12.1 do:40.4 (*)
6	863314	mounting axle body	3C0 505 145 A	di:18 do:54.2	18	63178	TCA	1K0 505 311 AB	
7	63050	TCA left	3C0 505 223 E	L:376.5	19	863726	silentblock for TCA	Part of	di:12.1 do:42 (*)
8	63051	TCA right	3C0 505 224 E	L:376.5	20	863714	silentblock for TCA	1K0 505 553 A	di:12.2 do:37.4 (*)
9	863719	mounting axle body	3C0 505 541	di:12.2 do:60.2 (*)	21	63660	stabiliser link rear axle	1K0 505 465 K	L:95
10	63775	track rod	1K0 505 323 N	L:305.5	22	863903	stabiliser mounting	1K0 511 327 AR	di:18.5
11	63971	track rod	5Q0 505 323 C	L:305	23	863904	stabiliser mounting	1K0 511 327 AS	di:19.5
12	863733	silentblock for TCA	Part of	di:14.3 do:38.2 (*)	24	863507	strut mount	3C0 513 353 C	di:10.5 do:68 L:62.7

Copyright 2021

VOLKSWAGEN
PASSAT

PASSAT NMS (A3) 09/2011 ->

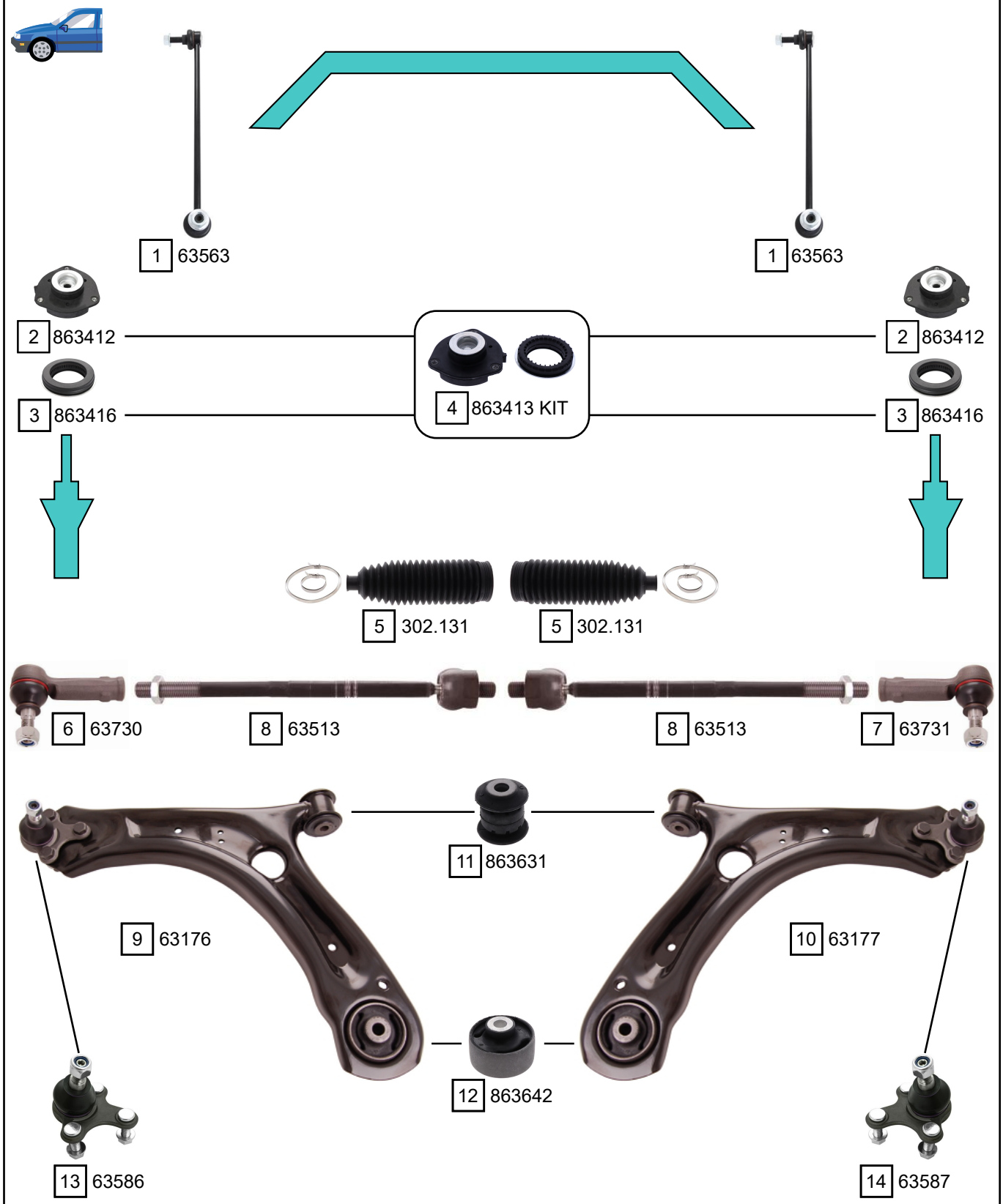

Ref.	Sidem Ref.	Description	OE-number	Measures	Ref.	Sidem Ref.	Description	OE-number	Measures
1	63563	stabiliser link	5Q0 411 315 A	L:335	8	63513	axial joint	561 423 810	th:MM16X1.5R L:330
2	863412	strut mount	1K0 412 331 B	di:14.2 L:49.5	9	63176	TCA left wbj	561 407 151 C	c:15.4
3	863416	bearing	1K0 412 249 B	di:68.5 do:112 L:25.5	10	63177	TCA right wbj	561 407 152 C	c:15.4
4	863413 KIT	strut mount kit	1K0 412 331 B S1	di:14.2 L:50	11	863631	silentblock for TCA	1K0 407 182	di:12.1 do:40 (*)
5	302.131	steering rack gaiter	1K0 423 831 A	D:50 d:15 L:193	12	863642	silentblock for TCA	1K0 407 183 M	di:13.4 do:65 (*)
6	63730	tie rod end left	1K0 423 811 J S1	c:13.2 th:FM16x1.5R	13	63586	ball joint left	1K0 407 365 C	c:15.4
7	63731	tie rod end right	1K0 423 812 J S1	c:13.2 th:FM16x1.5R	14	63587	ball joint right	1K0 407 366 C	c:15.4

Copyright 2021

VOLKSWAGEN
PASSAT

PASSAT NMS (A3) 09/2011 ->

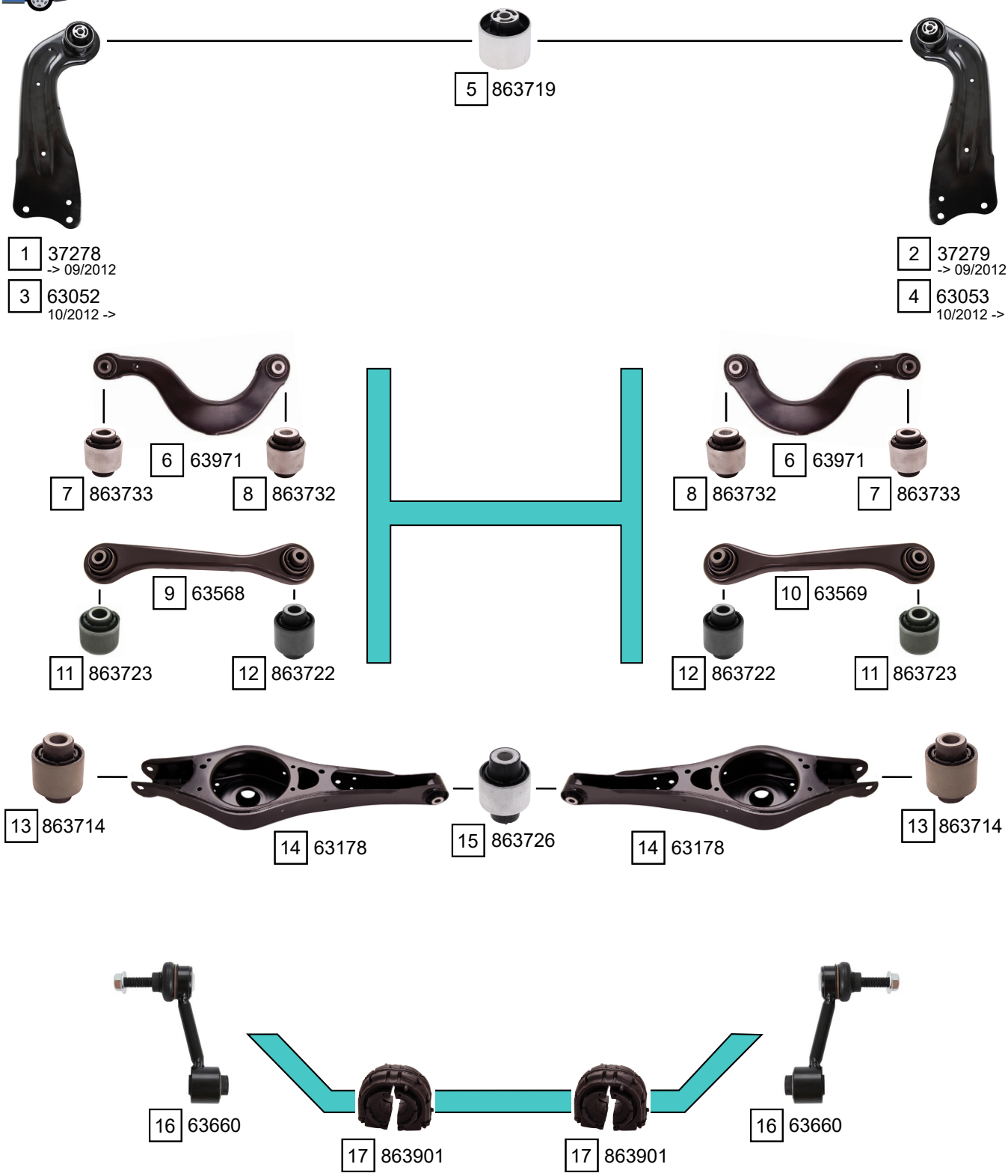

Ref.	Sidem Ref.	Description	OE-number	Measures	Ref.	Sidem Ref.	Description	OE-number	Measures
1	37278	TCA left	1K0 505 223 K	L:373	10	63569	track rod	1K0 501 530 C	L:298
2	37279	TCA right	1K0 505 224 K	L:373	11	863723	silentblock for TCA	Part of	di:14.2 do:40.1 (*)
3	63052	TCA left	1K0 505 223 L		12	863722	silentblock for TCA	Part of	di:12.1 do:40.4 (*)
4	63053	TCA right	1K0 505 224 L		13	863714	silentblock for TCA	1K0 505 553 A	di:12.2 do:37.4 (*)
5	863719	mounting axle body	3C0 505 541	di:12.2 do:60.2 (*)	14	63178	TCA	1K0 505 311 AB	
6	63971	track rod	5Q0 505 323 C	L:305	15	863726	silentblock for TCA	Part of	di:12.1 do:42 (*)
7	863733	silentblock for TCA	Part of	di:14.3 do:38.2 (*)	16	63660	stabiliser link rear axle	1K0 505 465 K	L:95
8	863732	silentblock for TCA	Part of	di:12.1 do:38.3 (*)	17	863901	stabiliser mounting	1K0 511 327 AP	di:17
9	63568	track rod	1K0 501 529 F	L:298					

Copyright 2021

VOLKSWAGEN
POLO

POLO (86C, 80)	10/1981 - 09/1994
POLO CLASSIC (86C, 80)	01/1985 - 12/1988
POLO COUPÉ (86C, 80)	10/1981 - 09/1994

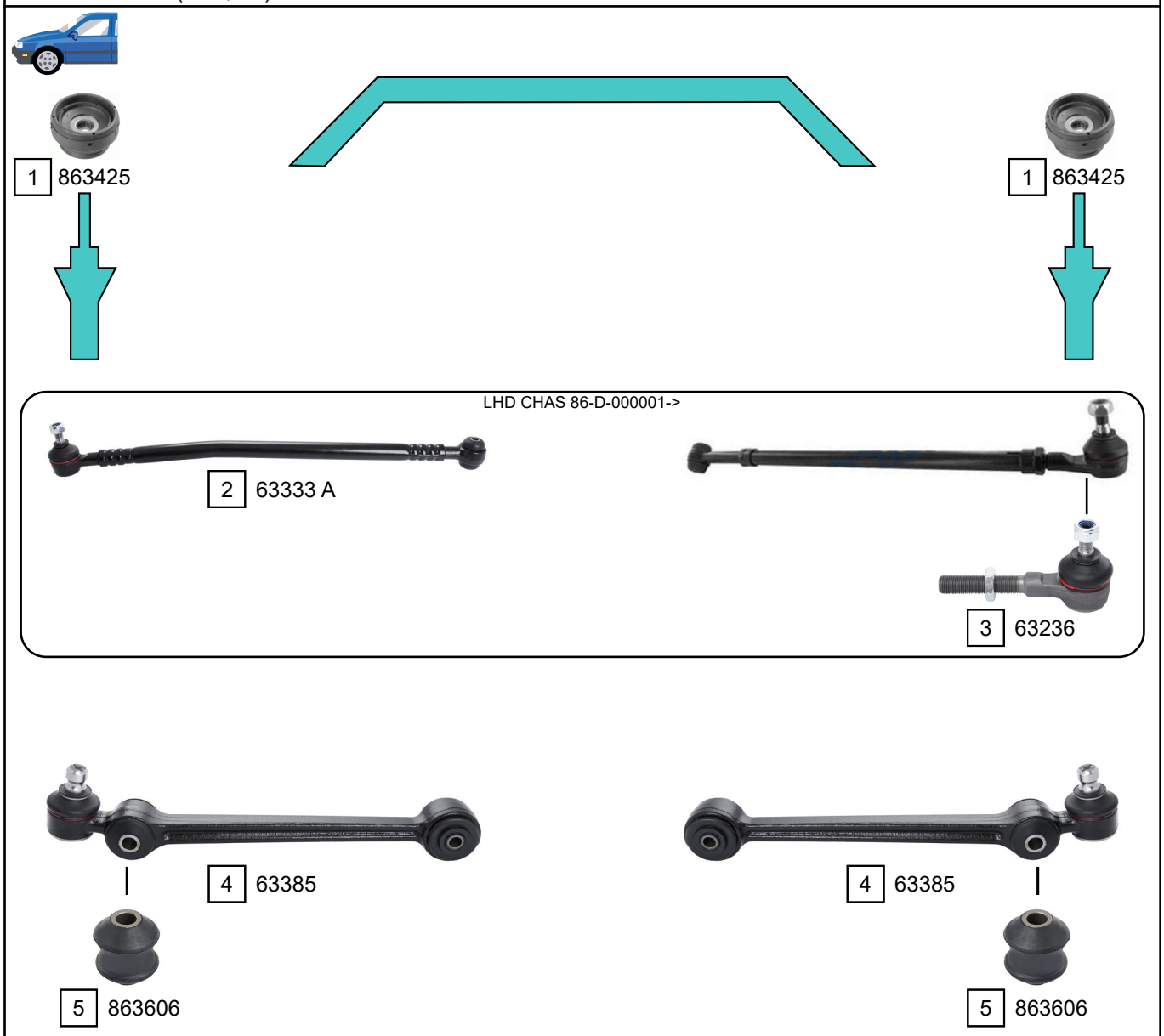

Ref.	Sidem Ref.	Description	OE-number	Measures	Ref.	Sidem Ref.	Description	OE-number	Measures
1	863425	strut mount	871 412 323 A	di:12.5 do:76.5 L:42.8	4	63385	TCA wbj	861 407 151 B	c:17
2	63333 A	tie rod left	871 419 801 A	c:10.8 L:511	5	863606	silentblock for TCA	861 407 183	di:12.2 do:33.5 (*)
3	63236	tie rod end	811 419 812	c:10.8 th:MM14X1.5R					

Copyright 2021

VOLKSWAGEN
POLO

POLO (6N1) 10/1994 - 10/1999
POLO BOX (6NF) 09/1994 - 12/1999

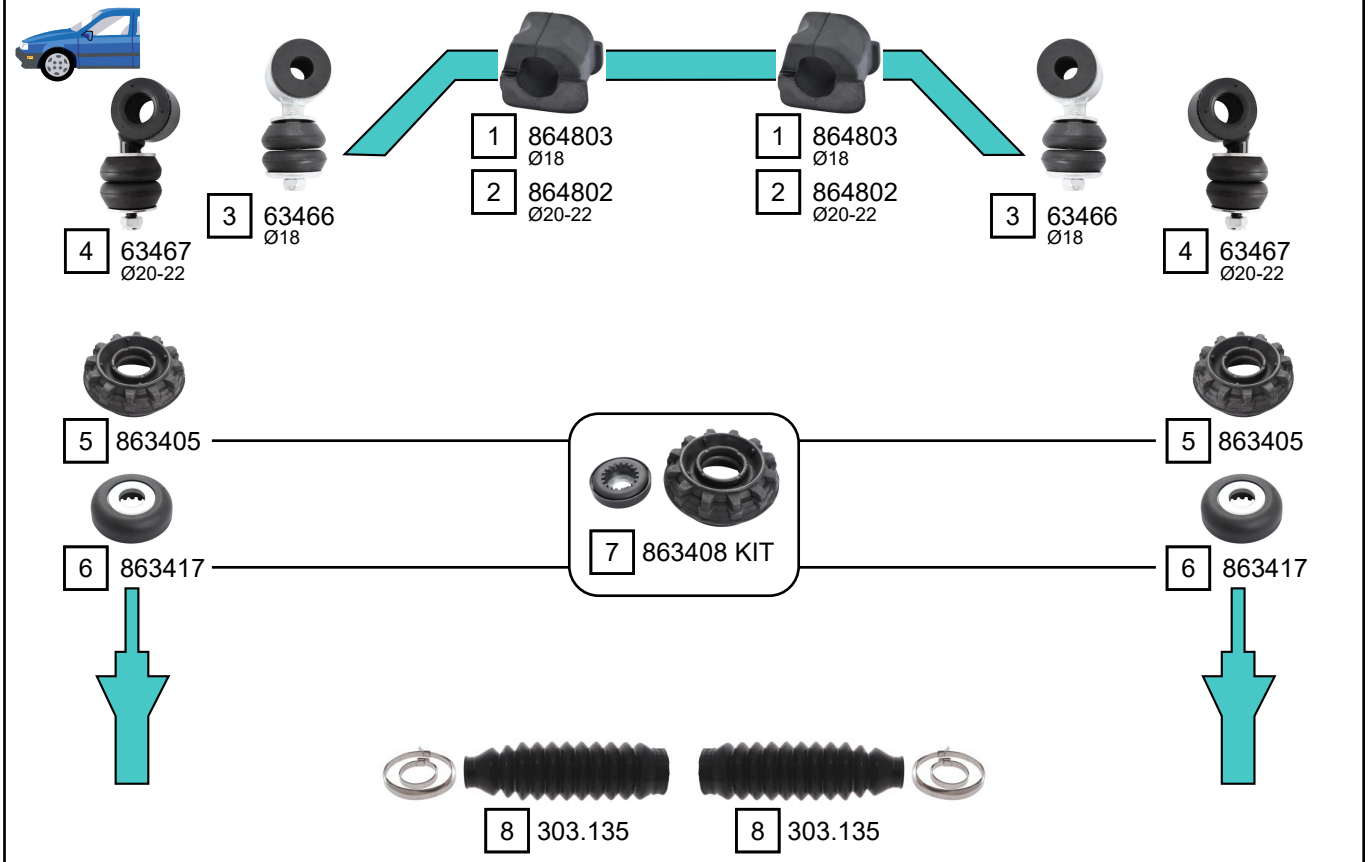

MS

PS -> CHAS 6N-W-078-256

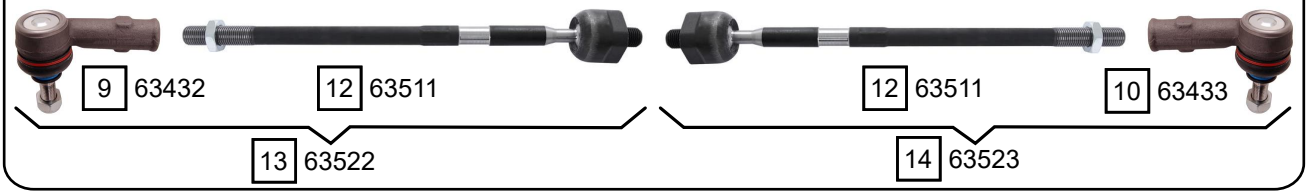

PS CHAS 6N-W-078-257 -> + GTI

Ref.	Sidem Ref.	Description	OE-number	Measures	Ref.	Sidem Ref.	Description	OE-number	Measures
1	864803	stabiliser mounting	6X0 411 313	di:18	9	63432	tie rod end left	6N0 419 811	c:12.6 th:FM14x1.5R
2	864802	stabiliser mounting	6X0 411 313 A	di:18	10	63433	tie rod end right	6N0 422 812	c:12.6 th:FM14x1.5R
3	63466	stabiliser link	6N0 411 315 C	L:72	11	63510	axial joint	Part of	th:FM22x1.5R L:320
4	63467	stabiliser link	6N0 411 315 D S1	L:73	12	63511	axial joint	Part of	th:MM14X1.5R L:308
5	863405	strut mount	6N0 412 331 A	di:27 do:82.5 L:34	13	63522	tie rod left	6N0 422 803 A	c:12.6
6	863417	bearing	1J0 412 249	di:14.3 do:45.3 L:13.4	14	63523	tie rod right	6N0 422 804 A	c:12.6
7	863408 KIT	strut mount kit	6N0 412 331 A S1	di:14.3 do:83 L:36	15	37132	tie rod end	6X0 422 811	c:12.7 th:FM14X1.5R
8	303.135	steering rack gaiter	6N0 422 831	D:42 d:11 L:208	16	37133	tie rod end	6X0 422 812	c:12.7 th:FM14X1.5R

Copyright 2021

VOLKSWAGEN
POLO

POLO (6N1) 10/1994 - 10/1999
POLO BOX (6NF) 09/1994 - 12/1999

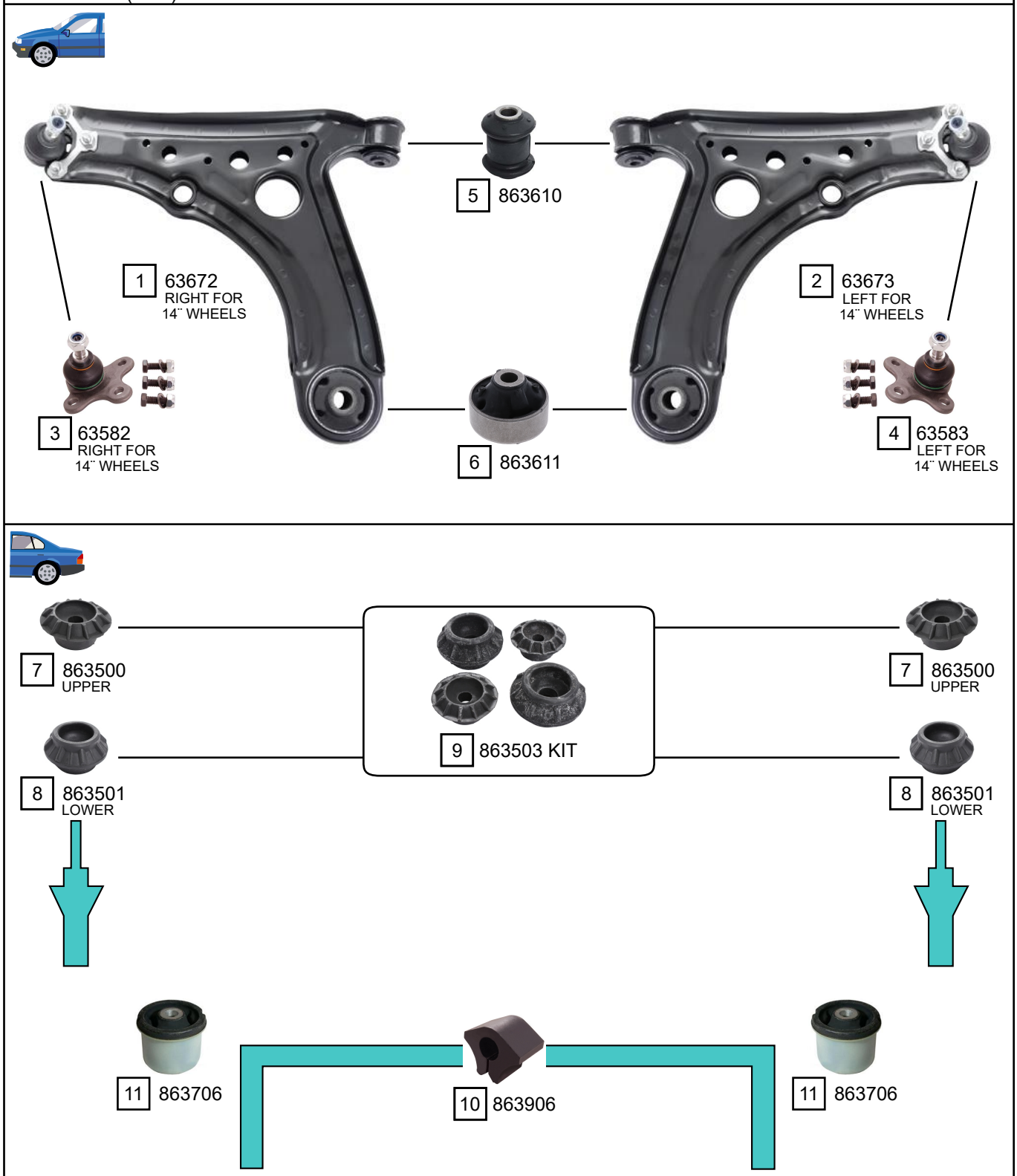

Ref.	Sidem Ref.	Description	OE-number	Measures	Ref.	Sidem Ref.	Description	OE-number	Measures
1	63672	TCA left wbj	6N0 407 151 B S1	c:15	7	863500	strut mount	191 512 335	di:13.5 do:59 L:27.5
2	63673	TCA right wbj	6N0 407 151 B S2	c:14.5	8	863501	strut mount	191 512 333	di:17.5 do:70 L:40
3	63582	ball joint left	6N0 407 365	c:14.7	9	863503 KIT	strut mount kit	191 512 335 S1	di:13.5
4	63583	ball joint right	6N0 407 365 A	c:14.7	10	863906	stabiliser mounting	871 511 423	di:16.5
5	863610	silentblock for TCA	Part of	di:10.1 do:27.4 (*)	11	863706	mounting axle body	6N0 501 541 D	di:10.1 do:58
6	863611	silentblock for TCA	6N0 407 181	di:17.1 do:60.2 (*)					

Copyright 2021

VOLKSWAGEN
POLO

POLO CLASSIC (6KV2) 11/1995 - 09/2001
POLO VARIANT (6KV5) 05/1997 - 09/2001

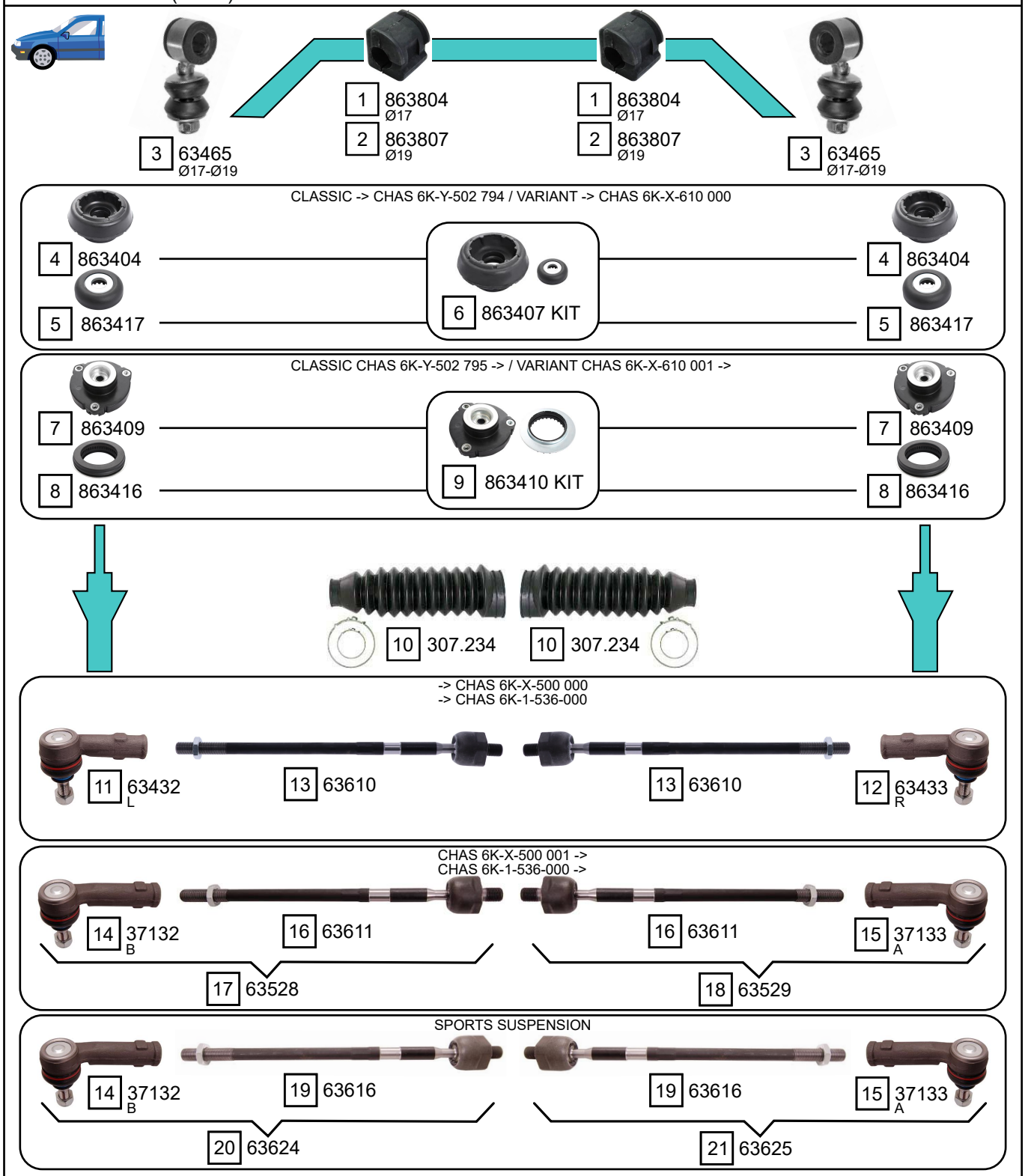

Ref.	Sidem Ref.	description	OE-number	measures	Ref.	Sidem Ref.	description	OE-number	measures
1	863804	stabiliser mounting	191 411 314	di:17	12	63433	tie rod end right	6N0 422 812	c:12.6 th:FM14x1.5R
2	863807	stabiliser mounting	1H0 411 314	di:19	13	63610	axial joint	Part of	th:MM14X1.5R L:342
3	63465	stabiliser link	6K0 411 315	L:78	14	37132	tie rod end	6X0 422 811	c:12.7 th:FM14X1.5R
4	863404	strut mount	7M0 412 331	di:26.5 do:96.7 L:50	15	37133	tie rod end	6X0 422 812	c:12.7 th:FM14X1.5R
5	863417	bearing	1J0 412 249	di:14.3 do:45.3 L:13.4	16	63611	axial joint	Part of	th:MM14X1.5R L:319
6	863407 KIT	strut mount kit	7M0 412 331 S1	di:14.3 do:98 L:50	17	63528	tie rod left	6K0 422 803	c:12.7
7	863409	strut mount	6N0 412 331 E	di:14.3 do:66 L:49	18	63529	tie rod right	6K0 422 804	c:12.7
8	863416	bearing	1K0 412 249 B	di:68.5 do:112 L:25.5	19	63616	axial joint	Part of	th:MM14X1.5R L:320
9	863410 KIT	strut mount kit	6N0 412 331 E S2	di:14.3	20	63624	tie rod left	6K0 422 803 F	c:12.7
10	307.234	steering rack gaiter	1H0 422 831 B	D:41 d:10 L:210	21	63625	tie rod right	6K0 422 804 F	c:12.7
11	63432	tie rod end left	6N0 419 811	c:12.6 th:FM14x1.5R					

Copyright 2021

VOLKSWAGEN
POLO

POLO CLASSIC (6KV2) 11/1995 - 09/2001
POLO VARIANT (6KV5) 05/1997 - 09/2001

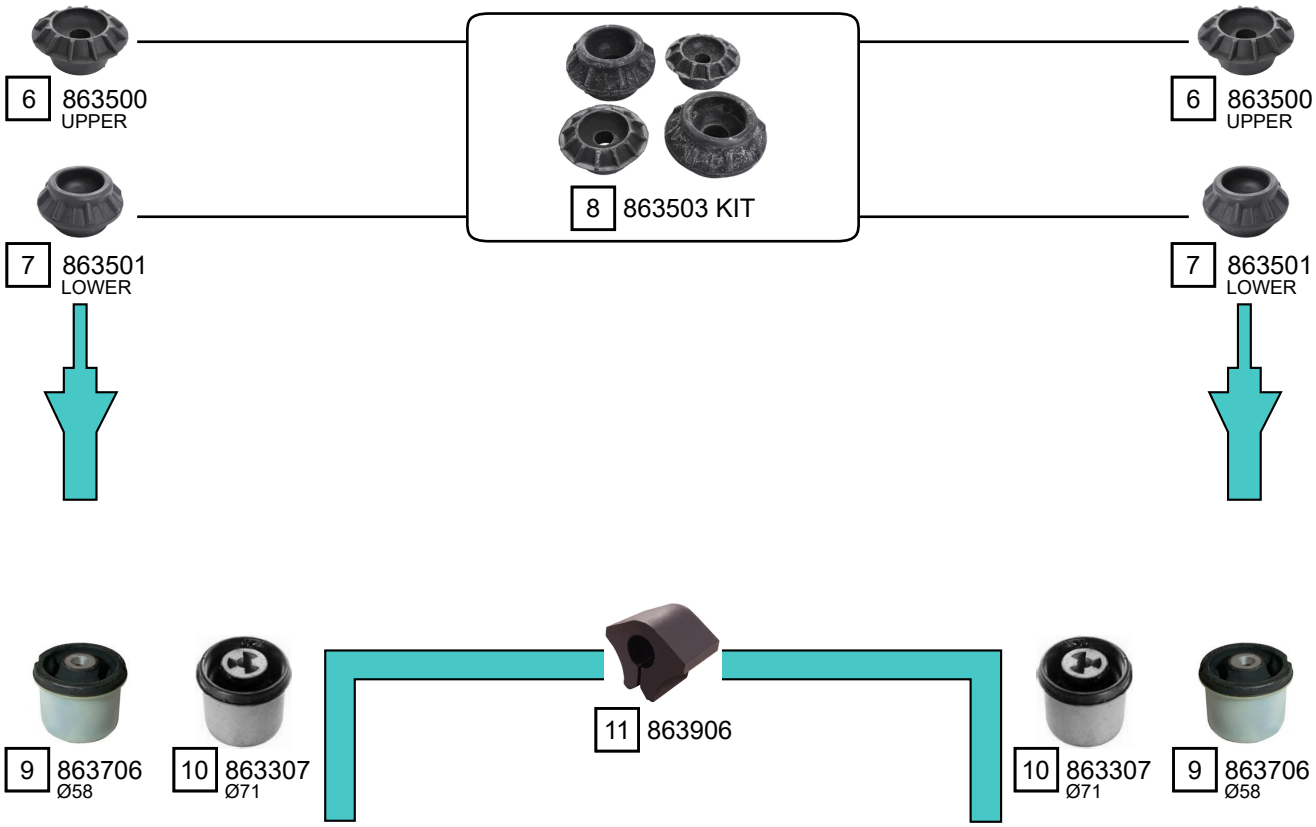

Ref.	Sidem Ref.	Description	OE-number	Measures	Ref.	Sidem Ref.	Description	OE-number	Measures
1	63489 A	TCA left wbj	191 407 151 B S1	c:19	7	863501	strut mount	191 512 333	di:17.5 do:70 L:40
2	63489 B	TCA right wbj	191 407 151 B S2	c:19	8	863503 KIT	strut mount kit	191 512 335 S1	di:13.5
3	63483	ball joint lower	357 407 365 A	c:19	9	863706	mounting axle body	6N0 501 541 D	di:10.1 do:58
4	863601	silentblock for TCA	357 407 182	di:12 do:32.6 (*)	10	863307	mounting axle body	6K0 501 541 A	di:10 do:71
5	863604	silentblock for TCA	191 407 181 D	di:17 do:60.1 (*)	11	863906	stabiliser mounting	871 511 423	di:16.5
6	863500	strut mount	191 512 335	di:13.5 do:59 L:27.5					

Copyright 2021

VOLKSWAGEN
POLO

POLO (6N2) 10/1999 - 09/2001

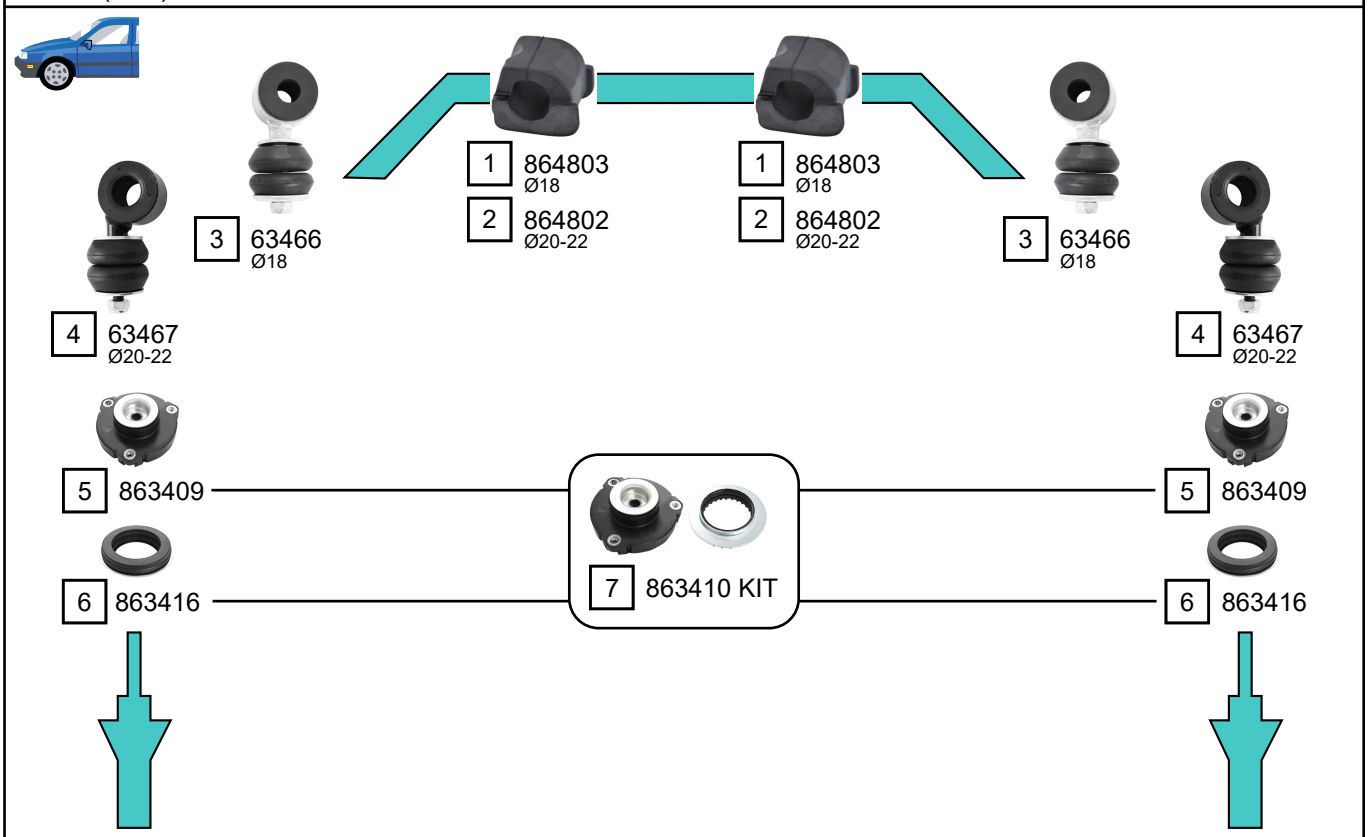

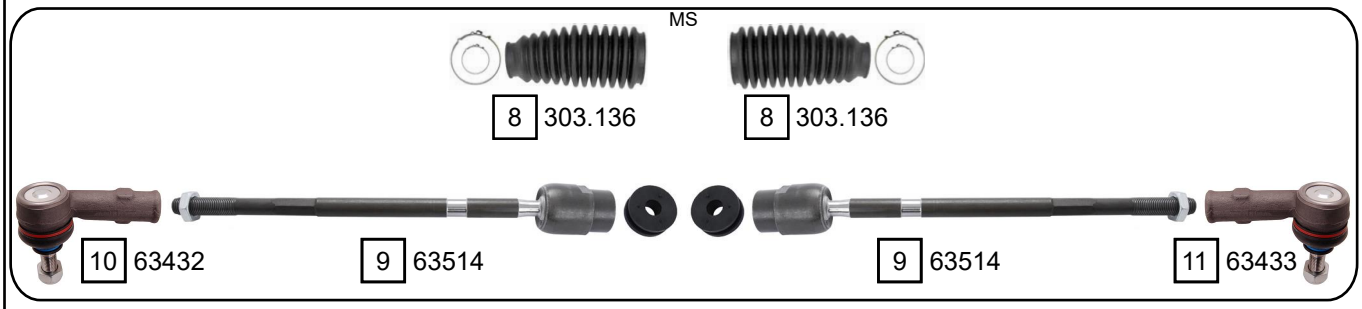

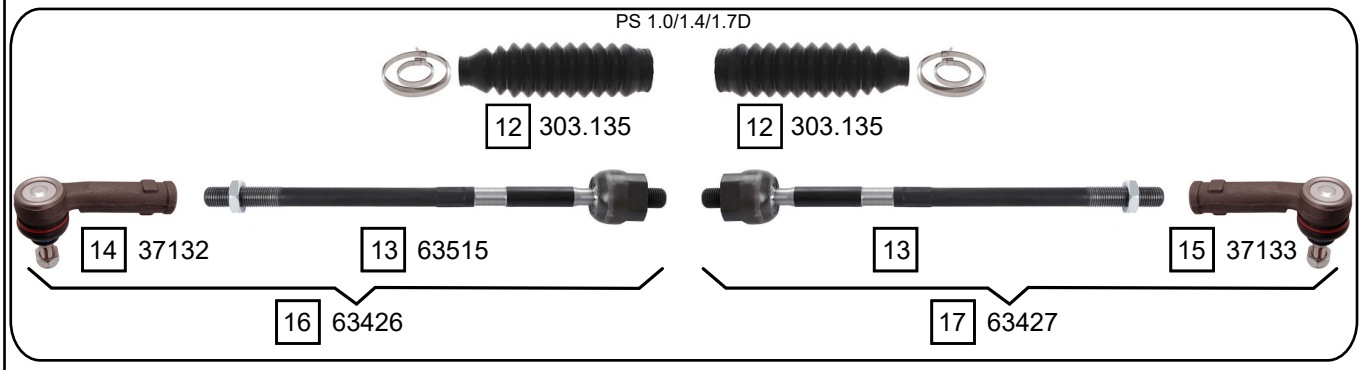

Ref.	Sidem Ref.	Description	OE-number	Measures	Ref.	Sidem Ref.	Description	OE-number	Measures
1	864803	stabiliser mounting	6X0 411 313	di:18	10	63432	tie rod end left	6N0 419 811	c:12.6 th:FM14x1.5R
2	864802	stabiliser mounting	6X0 411 313 A	di:18	11	63433	tie rod end right	6N0 422 812	c:12.6 th:FM14x1.5R
3	63466	stabiliser link	6N0 411 315 C	L:72	12	303.135	steering rack gaiter	6N0 422 831	D:42 d:11 L:208
4	63467	stabiliser link	6N0 411 315 D S1	L:73	13	63515	axial joint	Part of	th:MM14X1.5R L:292
5	863409	strut mount	6N0 412 331 E	di:14.3 do:66 L:49	14	37132	tie rod end	6X0 422 811	c:12.7 th:FM14X1.5R
6	863416	bearing	1K0 412 249 B	di:68.5 do:112 L:25.5	15	37133	tie rod end	6X0 422 812	c:12.7 th:FM14X1.5R
7	863410 KIT	strut mount kit	6N0 412 331 E S2	di:14.3	16	63426	tie rod left	6N0 422 803 C	c:12.7
8	303.136	steering rack gaiter	6N0 419 831	D:40 d:25 L:143	17	63427	tie rod right	6N0 422 804 C	c:12.7
9	63514	axial joint	Part of	th:FM22X1.5R L:332					

Copyright 2021

VOLKSWAGEN
POLO

POLO (6N2) 10/1999 - 09/2001

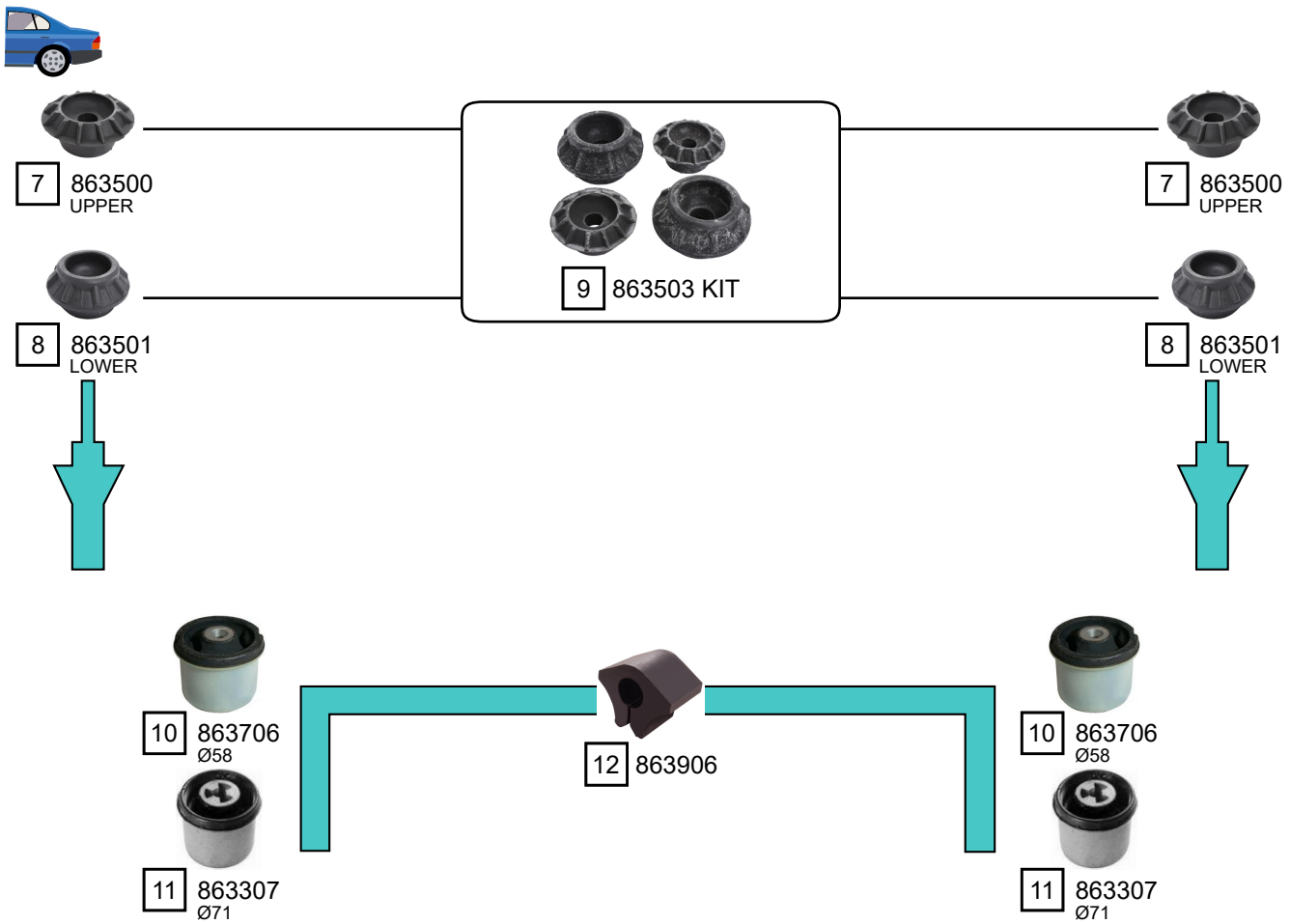

Ref.	Sidem Ref.	Description	OE-number	Measures	Ref.	Sidem Ref.	Description	OE-number	Measures
1	63674	TCA left wbj	6X0 407 151 A S1	c:14.5	7	863500	strut mount	191 512 335	di:13.5 do:59 L:27.5
2	63675	TCA right wbj	6X0 407 151 A S2	c:14.6	8	863501	strut mount	191 512 333	di:17.5 do:70 L:40
3	863610	silentblock for TCA	Part of	di:10.1 do:27.4 (*)	9	863503 KIT	strut mount kit	191 512 335 S1	di:13.5
4	863611	silentblock for TCA	6N0 407 181	di:17.1 do:60.2 (*)	10	863706	mounting axle body	6N0 501 541 D	di:10.1 do:58
5	63582	ball joint left	6N0 407 365	c:14.7	11	863307	mounting axle body	6K0 501 541 A	di:10 do:71
6	63583	ball joint right	6N0 407 365 A	c:14.7	12	863906	stabiliser mounting	871 511 423	di:16.5

Copyright 2021

VOLKSWAGEN
POLO

POLO (9N_) 10/2001 - 11/2009

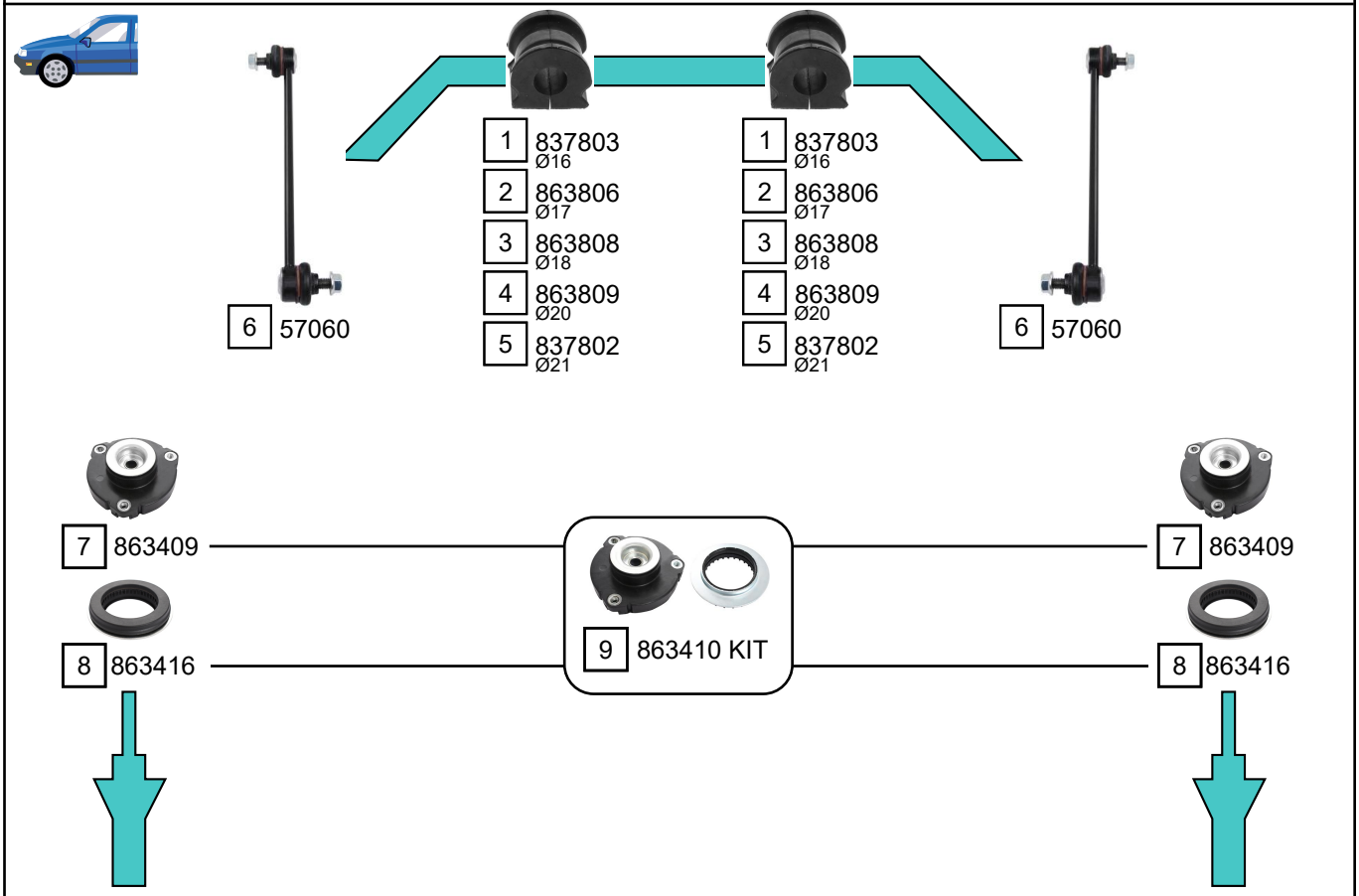

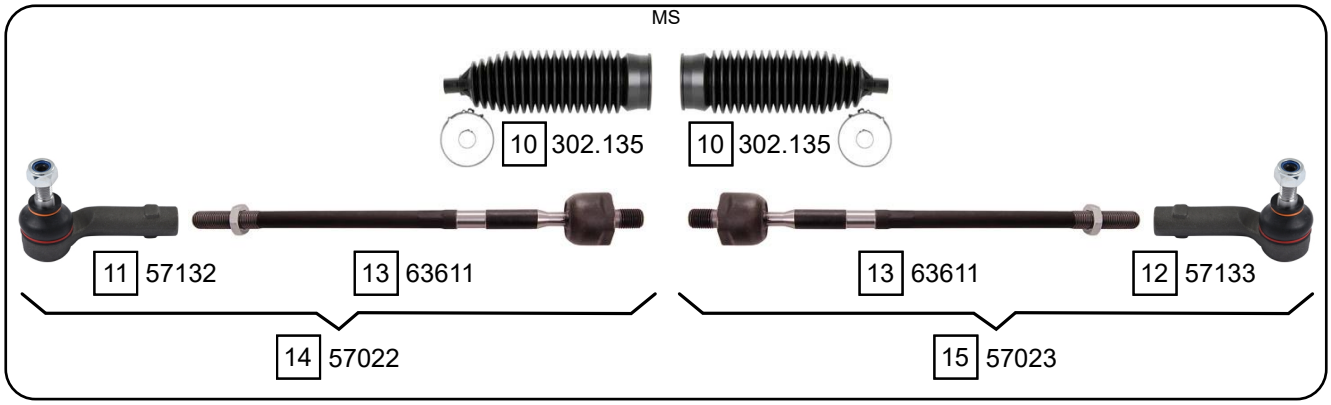

Ref.	Sidem Ref.	Description	OE-number	Measures	Ref.	Sidem Ref.	Description	OE-number	Measures
1	837803	stabiliser mounting	6Q0 411 314 P	di:16	9	863410 KIT	strut mount kit	6N0 412 331 E S2	di:14.3
2	863806	stabiliser mounting	6Q0 411 314 Q	di:17	10	302.135	steering rack gaiter	6E0 419 831	D:48 d:12 L:200
3	863808	stabiliser mounting	6Q0 411 314 R	di:18	11	57132	tie rod end left	6R0 423 811	c:13.4 th:FM14x1.5R
4	863809	stabiliser mounting	6Q0 411 314 F	di:19.6	12	57133	tie rod end right	6R0 423 812	c:13.4 th:FM14x1.5R
5	837802	stabiliser mounting	8Z0 411 314 B	di:20.8	13	63611	axial joint	Part of	th:MM14X1.5R L:319
6	57060	stabiliser link	6R0 411 315	L:270	14	57022	tie rod left	6Q0 419 803 F	c:13.4
7	863409	strut mount	6N0 412 331 E	di:14.3 do:66 L:49	15	57023	tie rod right	6Q0 419 804 F	c:13.4
8	863416	bearing	1K0 412 249 B	di:68.5 do:112 L:25.5					

Copyright 2021

VOLKSWAGEN
POLO

POLO (9N_) 10/2001 - 11/2009

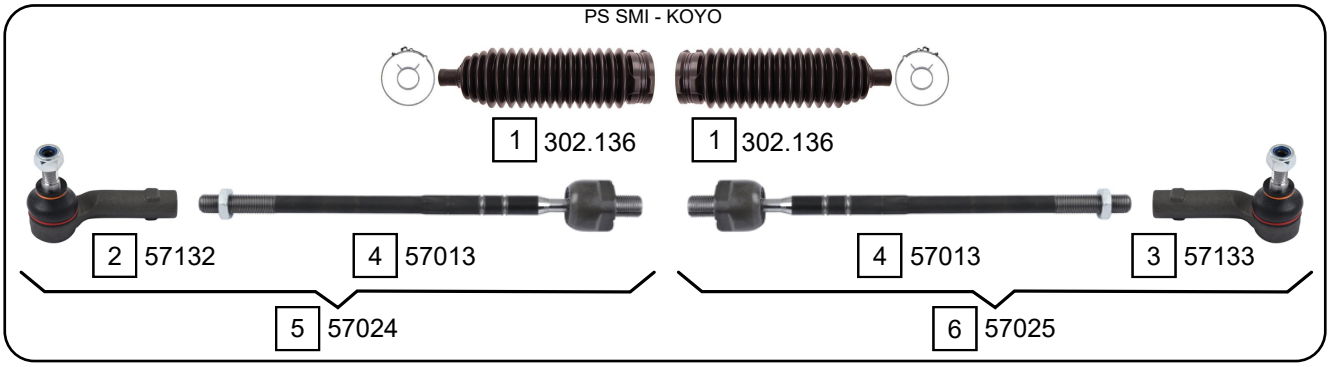

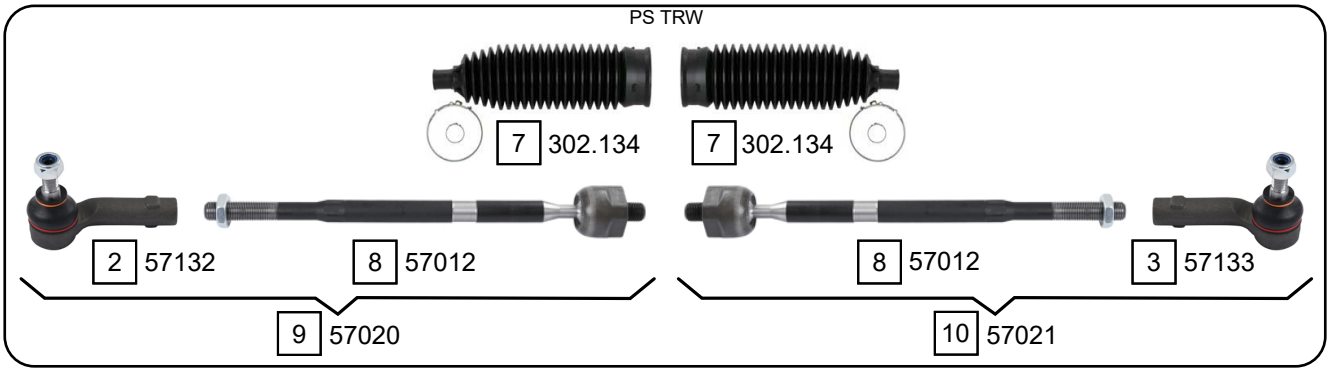

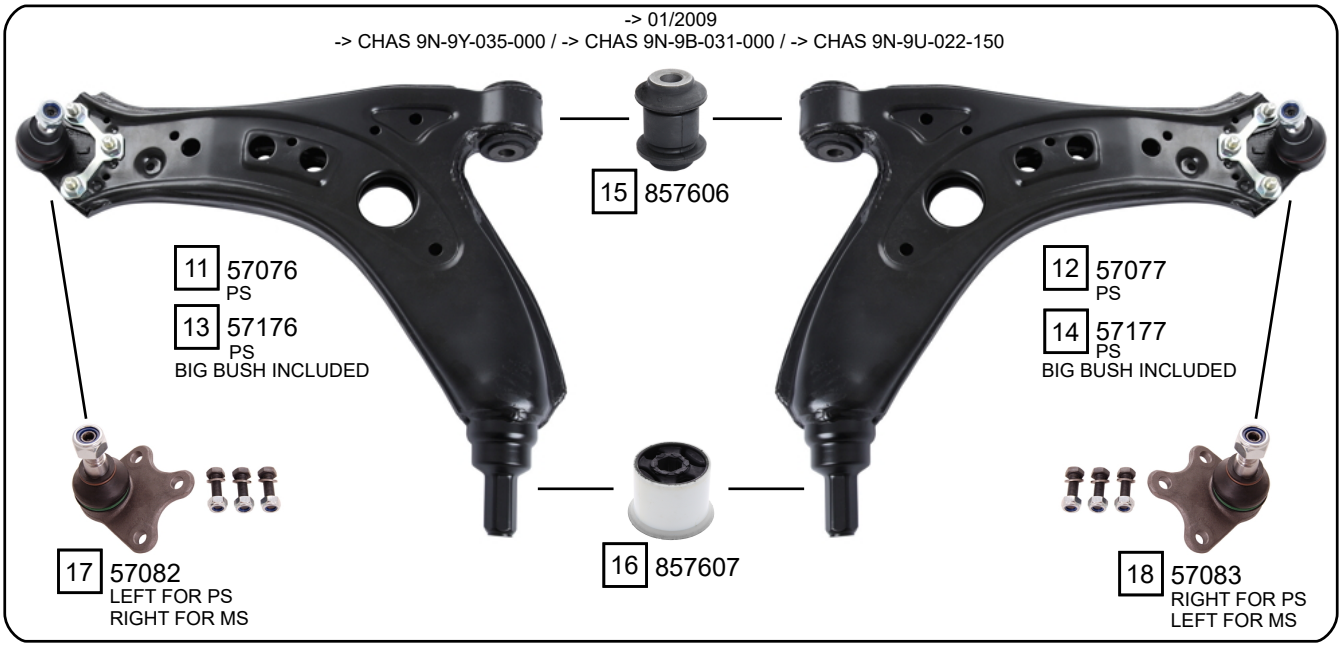

Ref.	Sidem Ref.	Description	OE-number	Measures	Ref.	Sidem Ref.	Description	OE-number	Measures
1	302.136	steering rack gaiter	6Q0 423 831 A	D:46 d:13 L:210	10	57021	tie rod right	6Q0 423 804 P	c:13.4
2	57132	tie rod end left	6R0 423 811	c:13.4 th:FM14x1.5R	11	57076	TCA left wbj	6Q0 407 151 L S1	c:14.8
3	57133	tie rod end right	6R0 423 812	c:13.4 th:FM14x1.5R	12	57077	TCA right wbj	6Q0 407 151 L S2	c:14.8
4	57013	axial joint	6Q0 423 810 C	th:MM16x1.5R L:300	13	57176	TCA left wbj	6Q0 407 151 L S3	c:14.8
5	57024	tie rod left	6Q0 423 803 G	c:13.4	14	57177	TCA right wbj	6Q0 407 151 L S4	c:14.8
6	57025	tie rod right	6Q0 423 804 G	c:13.4	15	857606	silentblock for TCA	6Q0 407 182 A	di:12.1 do:32 (*)
7	302.134	steering rack gaiter	6Q0 423 831 D	D:48 d:14 L:205	16	857607	silentblock for TCA	1K0 407 183 E	di:18.5 do:64 (*)
8	57012	axial joint	Part of	th:MM14X1.5R L:297	17	57082	ball joint	6Q0 407 365 A	c:14.8
9	57020	tie rod left	6Q0 423 803 P	c:13.4	18	57083	ball joint	6Q0 407 366 A	c:14.8

Copyright 2021

VOLKSWAGEN
POLO

POLO (9N_) 10/2001 - 11/2009

07/2008 ->
CHAS 9N-9Y-035-001 -> / CHAS 9N-9B-031-001 -> / CHAS 9N-9U-022-151 ->

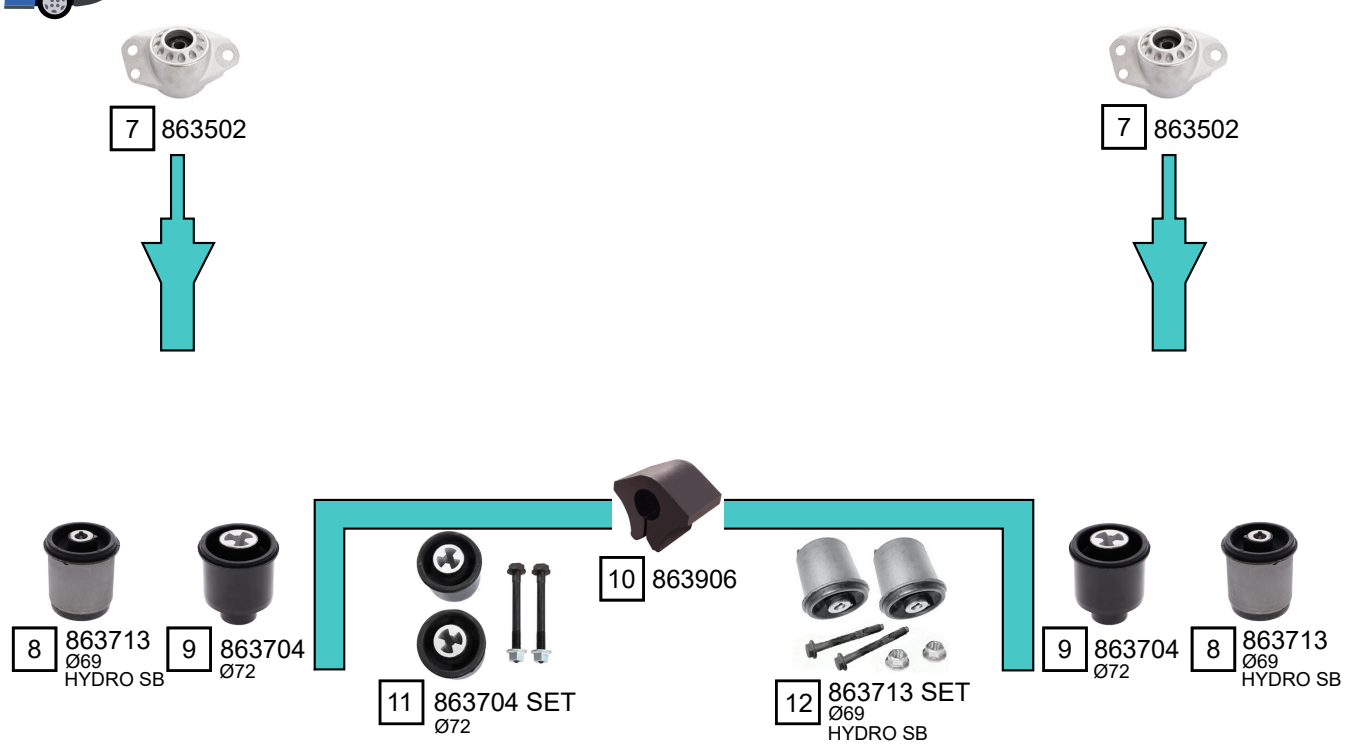

Ref.	Sidem Ref.	Description	OE-number	Measures	Ref.	Sidem Ref.	Description	OE-number	Measures
1	57170	TCA left wbj	6R0 407 151	c:15	7	863502	strut mount	6R0 513 353	di:11.1 do:62 L:58.8
2	57171	TCA right wbj	6R0 407 152	c:15	8	863713	mounting axle body	1J0 501 541 D	di:13.2 do:69
3	863601	silentblock for TCA	357 407 182	di:12 do:32.6 (*)	9	863704	mounting axle body	1J0 501 541 C	di:12 do:71.5
4	863602	silentblock for TCA	1J0 407 181	di:13 do:60 (*)	10	863906	stabiliser mounting	871 511 423	di:16.5
5	57084	ball joint left	6R0 407 365 A	c:14.9	11	863704 SET	mounting axle body set	1J0 501 541 C S1	do:71.5
6	57085	ball joint right	6R0 407 366 A	c:14.9	12	863713 SET	mounting axle body set	1J0 501 541 D S1	do:69

Copyright 2021

VOLKSWAGEN
POLO

POLO (6R_, 6C_) 06/2009 ->

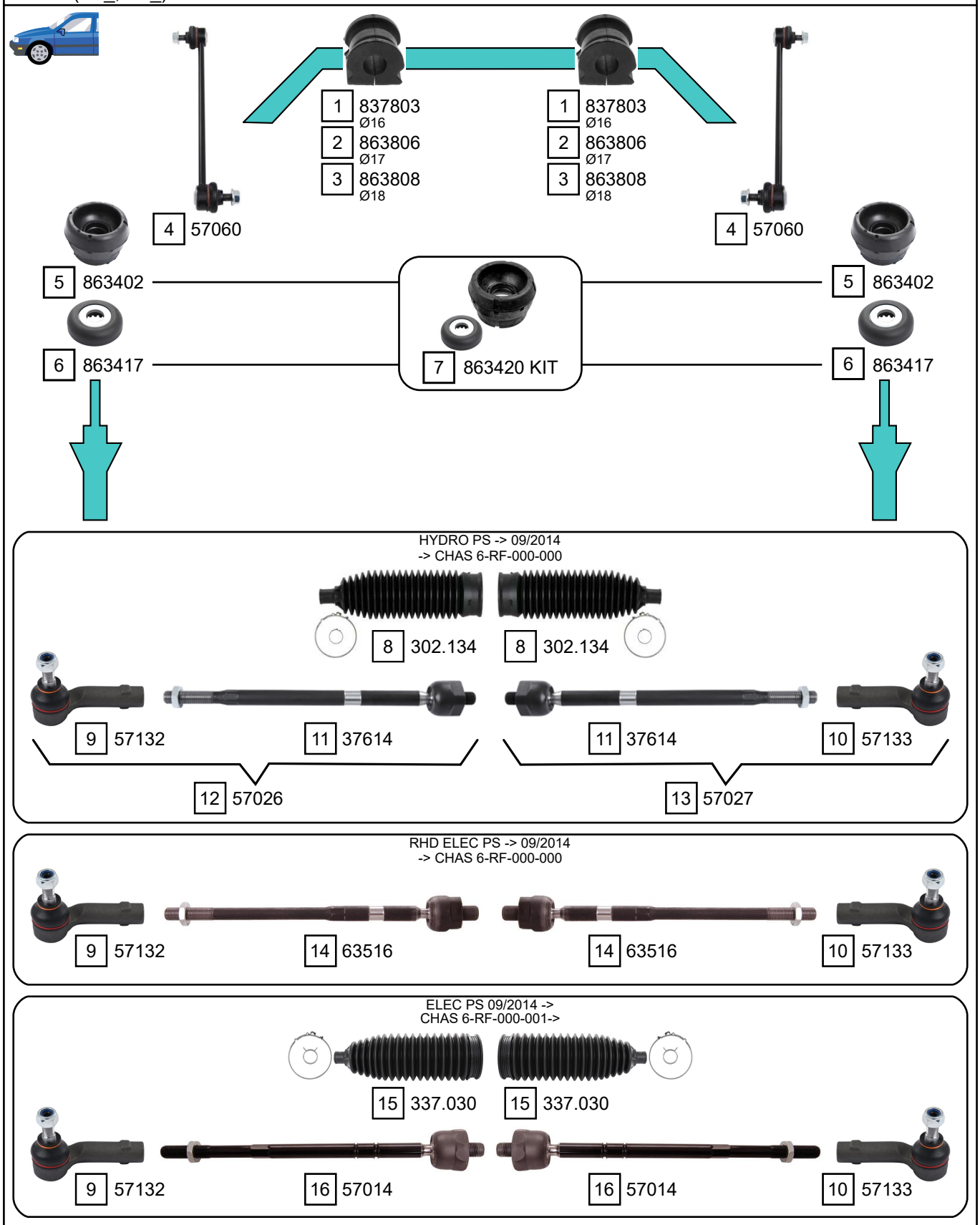

Ref.	Sidem Ref.	Description	OE-number	Measures	Ref.	Sidem Ref.	Description	OE-number	Measures
1	837803	stabiliser mounting	6Q0 411 314 P	di:16	9	57132	tie rod end left	6R0 423 811	c:13.4 th:FM14x1.5R
2	863806	stabiliser mounting	6Q0 411 314 Q	di:17	10	57133	tie rod end right	6R0 423 812	c:13.4 th:FM14x1.5R
3	863808	stabiliser mounting	6Q0 411 314 R	di:18	11	37614	axial joint	Part of	th:MM14x1.5R L:313
4	57060	stabiliser link	6R0 411 315	L:270	12	57026	tie rod left	6R0 423 803 A	c:13.4
5	863402	strut mount	1J0 412 331 C	di:26 do:82 L:53	13	57027	tie rod right	6R0 423 804 A	c:13.4
6	863417	bearing	1J0 412 249	di:14.3 do:45.3 L:13.4	14	63516	axial joint	6RU 423 810	th:MM16X1.5R L:312
7	863420 KIT	strut mount kit	1J0 412 331 C S1	di:26 do:82 L:53	15	337.030	steering rack gaiter	6C0 423 831 B	D:51 d:13.5 L:191
8	302.134	steering rack gaiter	6Q0 423 831 D	D:48 d:14 L:205	16	57014	axial joint	6C0 423 810 C	th:MM14X1.5R L:312

Copyright 2021

VOLKSWAGEN
POLO

POLO (6R_, 6C_) 06/2009 ->

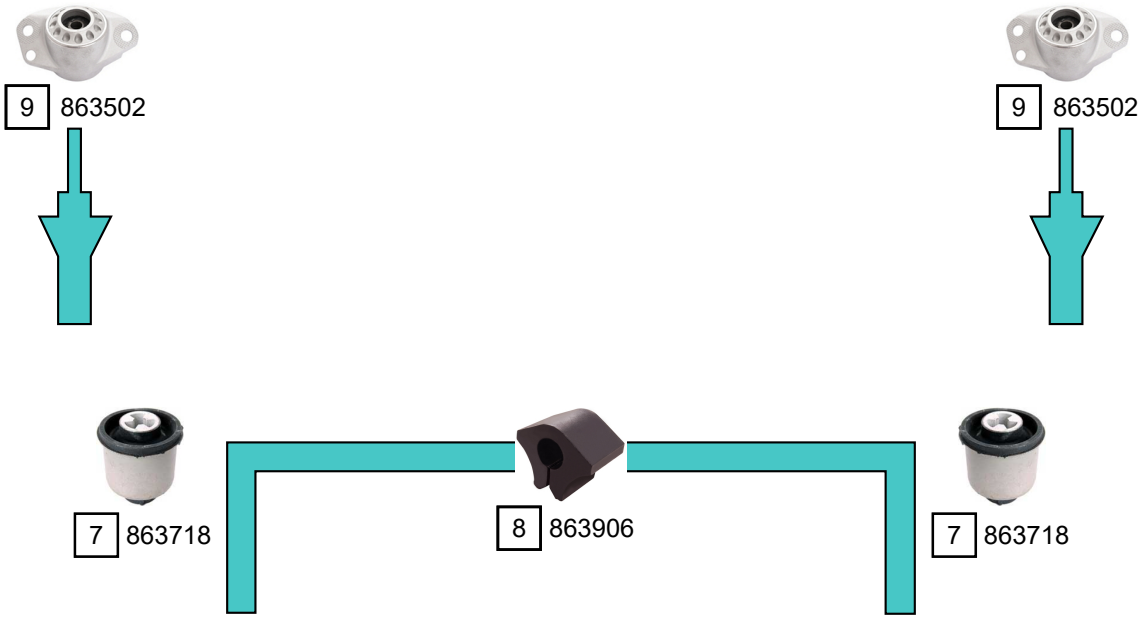

Ref.	Sidem Ref.	Description	OE-number	Measures	Ref.	Sidem Ref.	Description	OE-number	Measures
1	57172	TCA left wbj	6R0 407 151 F	c:14.9	6	863602	silentblock for TCA	1J0 407 181	di:13 do:60 (*)
2	57173	TCA right wbj	6R0 407 152 F	c:14.9	7	863718	mounting axle body	6R0 501 541 A	do:71.6
3	57084	ball joint left	6R0 407 365 A	c:14.9	8	863906	stabiliser mounting	871 511 423	di:16.5
4	57085	ball joint right	6R0 407 366 A	c:14.9	9	863502	strut mount	6R0 513 353	di:11.1 do:62 L:58.8
5	863601	silentblock for TCA	357 407 182	di:12 do:32.6 (*)					

Copyright 2021

VOLKSWAGEN
POLO

POLO SEDAN (61_) 05/2011 ->

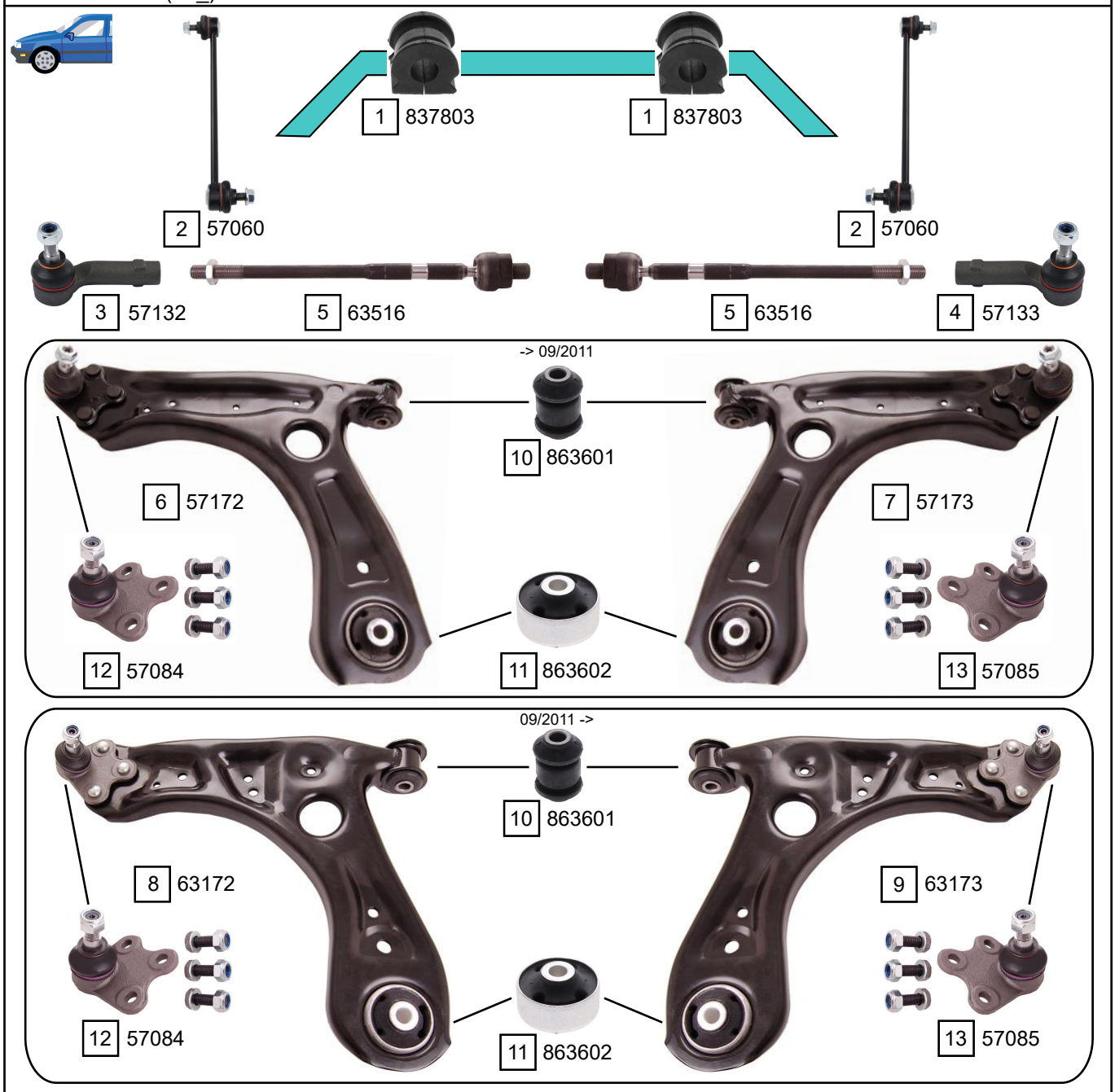

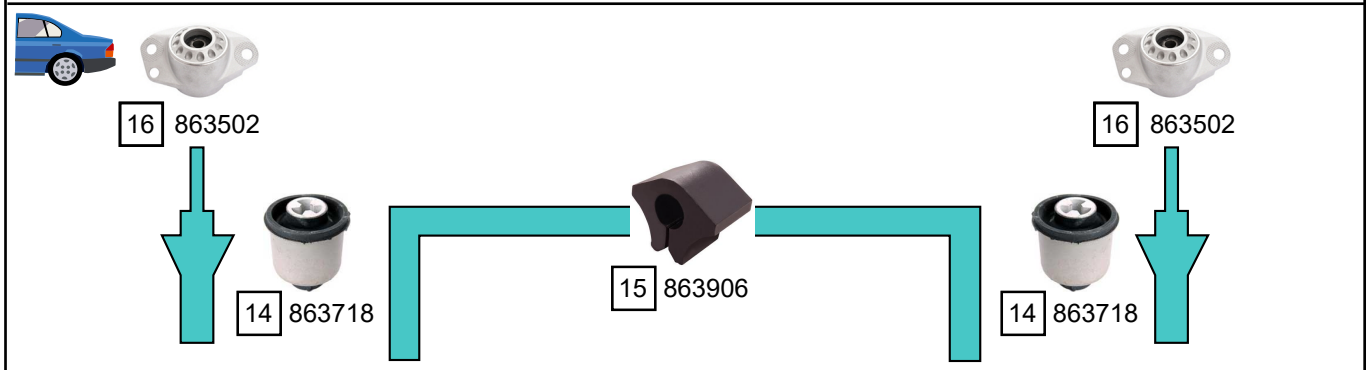

Ref.	Sidem Ref.	Description	OE-number	Measures	Ref.	Sidem Ref.	Description	OE-number	Measures
1	837803	stabiliser mounting	6Q0 411 314 P	di:16	9	63173	TCA right wbj	6RF 407 152 B	c:15
2	57060	stabiliser link	6R0 411 315	L:270	10	863601	silentblock for TCA	357 407 182	di:12 do:32.6 (*)
3	57132	tie rod end left	6R0 423 811	c:13.4 th:FM14x1.5R	11	863602	silentblock for TCA	1J0 407 181	di:13 do:60 (*)
4	57133	tie rod end right	6R0 423 812	c:13.4 th:FM14x1.5R	12	57084	ball joint left	6R0 407 365 A	c:14.9
5	63516	axial joint	6RU 423 810	th:MM16X1.5R L:312	13	57085	ball joint right	6R0 407 366 A	c:14.9
6	57172	TCA left wbj	6R0 407 151 F	c:14.9	14	863718	mounting axle body	6R0 501 541 A	do:71.6
7	57173	TCA right wbj	6R0 407 152 F	c:14.9	15	863906	stabiliser mounting	871 511 423	di:16.5
8	63172	TCA left wbj	6RF 407 151 B	c:15	16	863502	strut mount	6R0 513 353	di:11.1 do:62 L:58.8

Copyright 2021

VOLKSWAGEN
POLO

POLO (AW1) 06/2017 ->

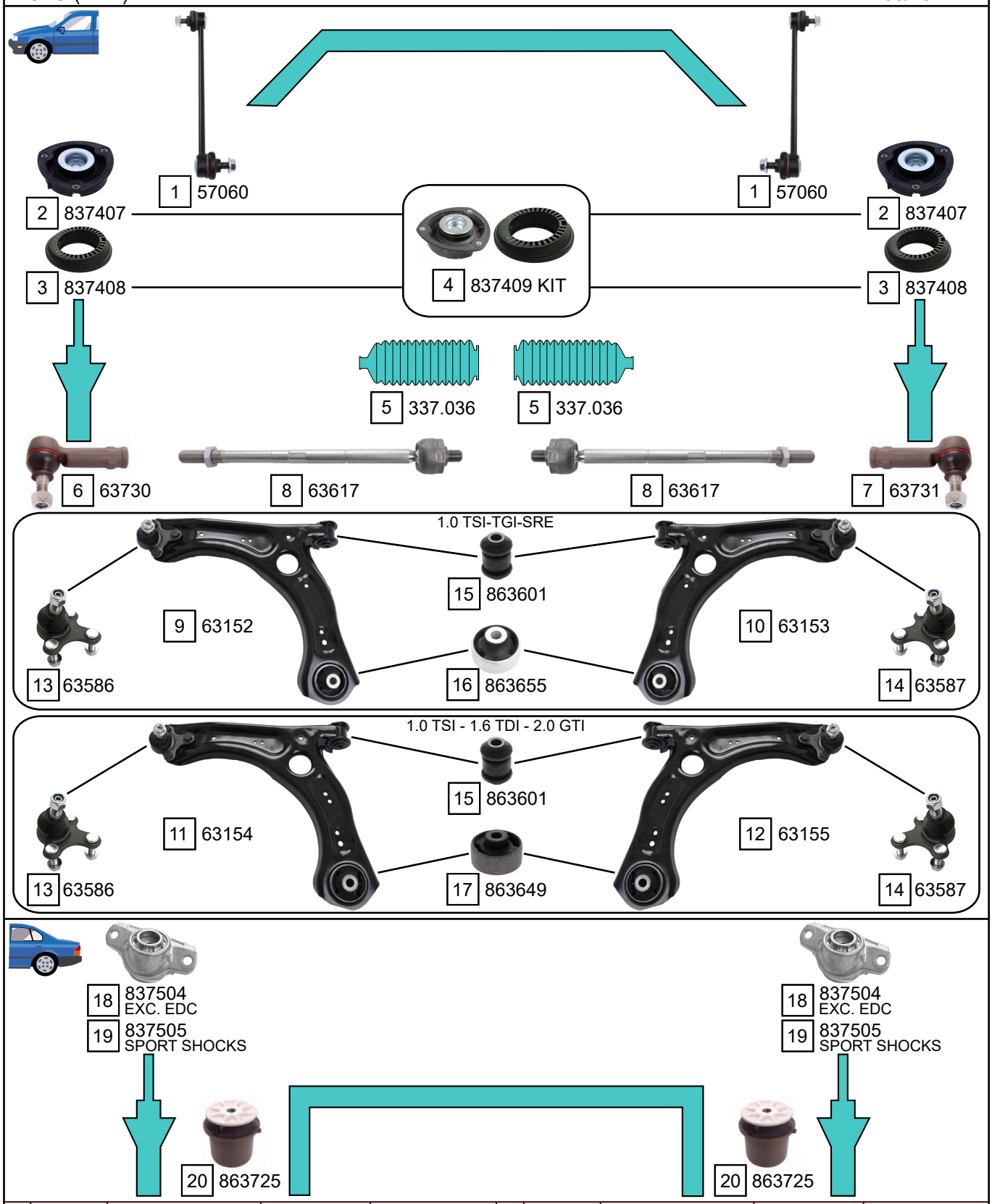

Ref.	Sidem Ref.	Description	OE-number	Measures	Ref.	Sidem Ref.	Description	OE-number	Measures
1	57060	stabiliser link	6R0 411 315	L:270	11	63154	TCA left wbj	2Q0 407 151 E S1	c:15.4
2	837407	strut mount	5Q0 412 331 E	di:14.6 do:64.1 L:42	12	63155	TCA right wbj	2Q0 407 152 E S1	c:15.4
3	837408	bearing	5Q0 412 249 F	di:74 do:127 L:38.6	13	63586	ball joint left	1K0 407 365 C	c:15.4
4	837409 KIT	strut mount kit	5Q0 412 331 E S1	di:14.6 do:127	14	63587	ball joint right	1K0 407 366 C	c:15.4
5	337.036	steering rack gaiter	2Q0 423 831	D:54.5 d:14.5 L:192	15	863601	silentblock for TCA	357 407 182	di:12 do:32.6 (*)
6	63730	tie rod end left	1K0 423 811 J S1	c:13.2 th:FM16x1.5R	16	863655	silentblock for TCA	2Q0 407 183 B	di:12.9 do:60.5 (*)
7	63731	tie rod end right	1K0 423 812 J S1	c:13.2 th:FM16x1.5R	17	863649	silentblock for TCA	5Q0 407 183 E	di:12.9 do:65 (*)
8	63617	axial joint	2Q0 423 810 D	th:MM14X1.5R L:315	18	837504	strut mount	5Q0 513 353 H	di:11.2 do:56.5 L:60.7
9	63152	TCA left wbj	2Q0 407 151 D S1	c:15.4	19	837505	strut mount	5Q0 513 353 G	di:10.2 do:65.8 L:63.3
10	63153	TCA right wbj	2Q0 407 152 D S1	c:15.4	20	863725	mounting axle body	5Q0 501 541 C	di:12.5 do:72

Copyright 2021

VOLKSWAGEN
SANTANA

SANTANA 08/1981 - 12/1984

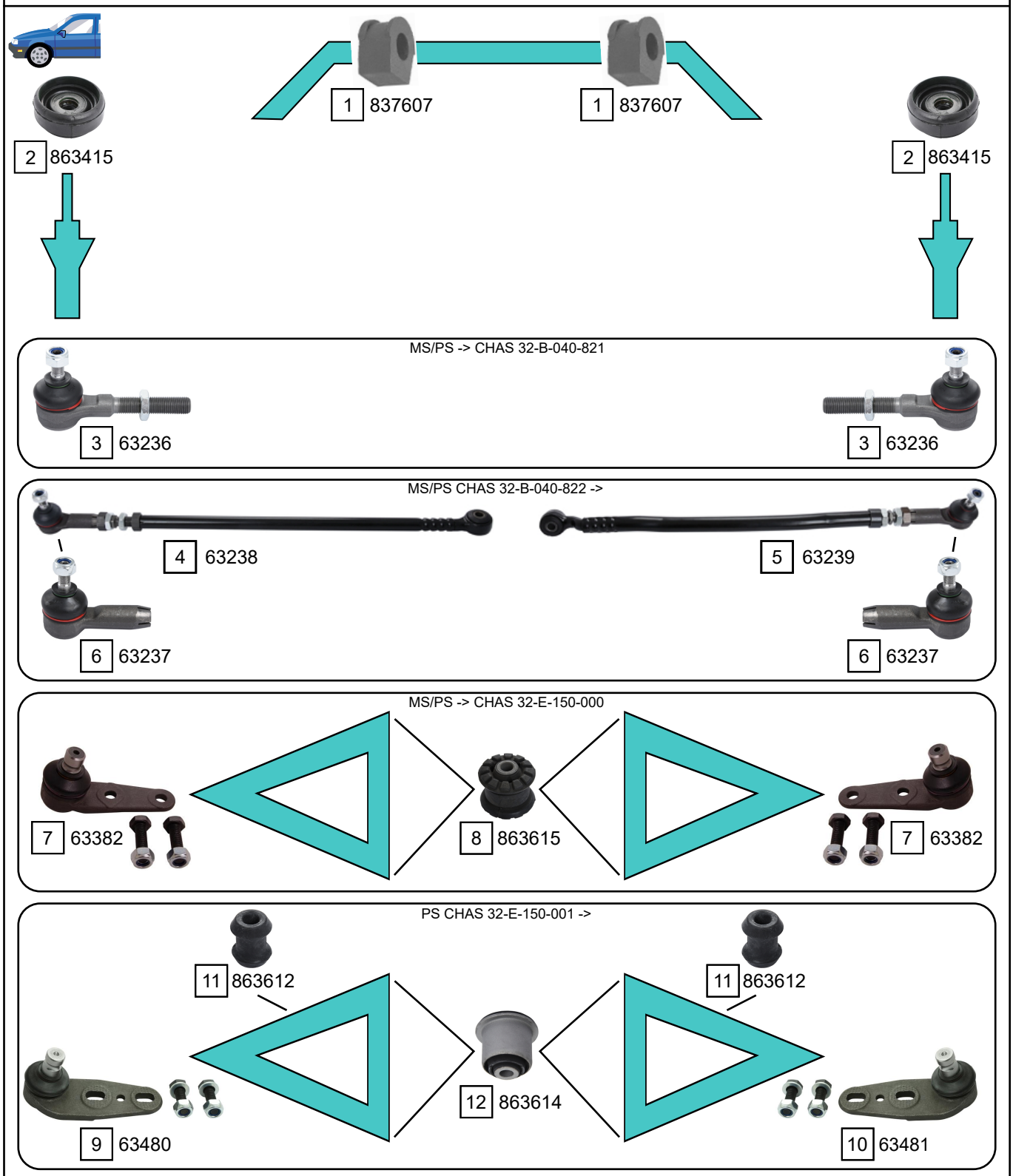

Ref.	Sidem Ref.	Description	OE-number	Measures	Ref.	Sidem Ref.	Description	OE-number	Measures
1	837607	stabiliser mounting	823 411 313 A	di:14	7	63382	ball joint lower	823 407 365 E	c:17
2	863415	strut mount	8A0 412 323 D	di:14.2 do:76 L:36	8	863615	silentblock for TCA	811 407 181 A	di:10.2 do:38.2 (*)
3	63236	tie rod end	811 419 812	c:10.8 th:MM14X1.5R	9	63480	ball joint lower left	855 407 365 B	c:17
4	63238	tie rod left	811 419 801 E	L:607	10	63481	ball joint lower right	855 407 366 B	c:17
5	63239	tie rod right	811 419 802 J	c:10.8 L:540	11	863612	silentblock for TCA	857 407 474	di:12.2 do:21.6 (*)
6	63237	tie rod end	811 419 812 A	c:10.8 th:FM14x1.5R	12	863614	silentblock for TCA	8A0 407 181	di:10.1 do:37.1 (*)

Copyright 2021

VOLKSWAGEN
SCIROCCO

SIDEM Experts know why

SCIROCCO (53, 53B) 02/1974 - 07/1992

1 863400

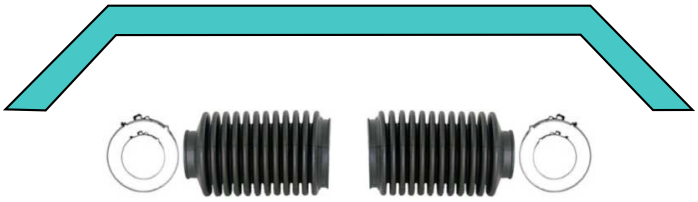

2 302.035 MS (53B)

2 302.035 MS (53B)

3 307.234 PS (53B)

3 307.234 PS (53B)

1 863400

MS

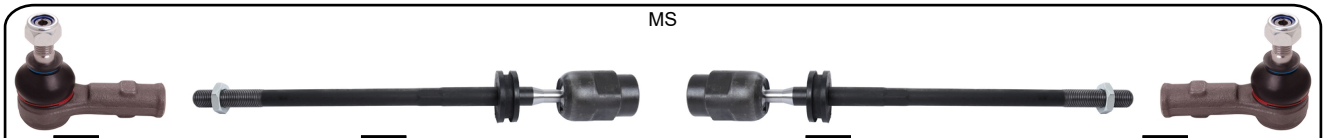

5 63234

4 63234 A

6 63231

4 63234 A

5 63234

6 63231

-> CHAS 178-3173-583

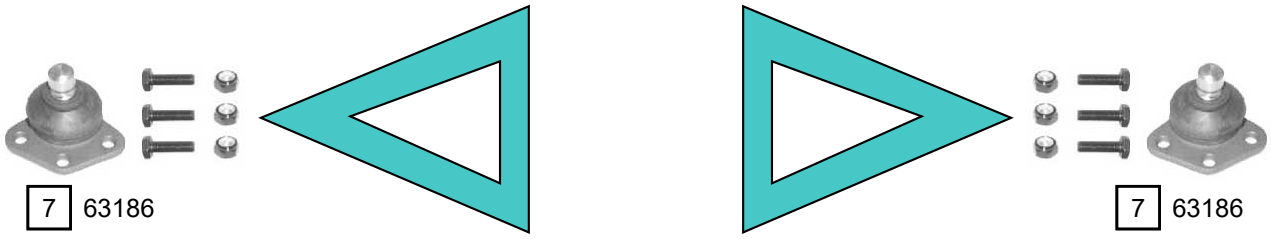

7 63186

7 63186

CHAS 178-3173-584 ->

8 63487 A

9 63487 B

10 63188

10 63188

Ref.	Sidem Ref.	Description	OE-number	Measures	Ref.	Sidem Ref.	Description	OE-number	Measures
1	863400	strut mount	171 412 329 A	di:14.2 do:81.5 L:53	6	63231	tie rod	171 419 804	c:12.6
2	302.035	steering rack gaiter	191 419 831	D:41 d:25 L:120	7	63186	ball joint lower	171 407 365 D	c:15
3	307.234	steering rack gaiter	1H0 422 831 B	D:41 d:10 L:210	8	63487 A	TCA left wbj	171 407 153 D S1	c:17
4	63234 A	axial joint	Part of	th:FM22X1.5R L:340	9	63487 B	TCA right wbj	171 407 153 D S2	c:17
5	63234	tie rod end	171 419 812	c:12.6 th:FM14x1.5R	10	63188	ball joint lower	171 407 365 G	c:17

Copyright 2021

VOLKSWAGEN
SCIROCCO

SCIROCCO (137, 138) 09/2008 - 11/2017

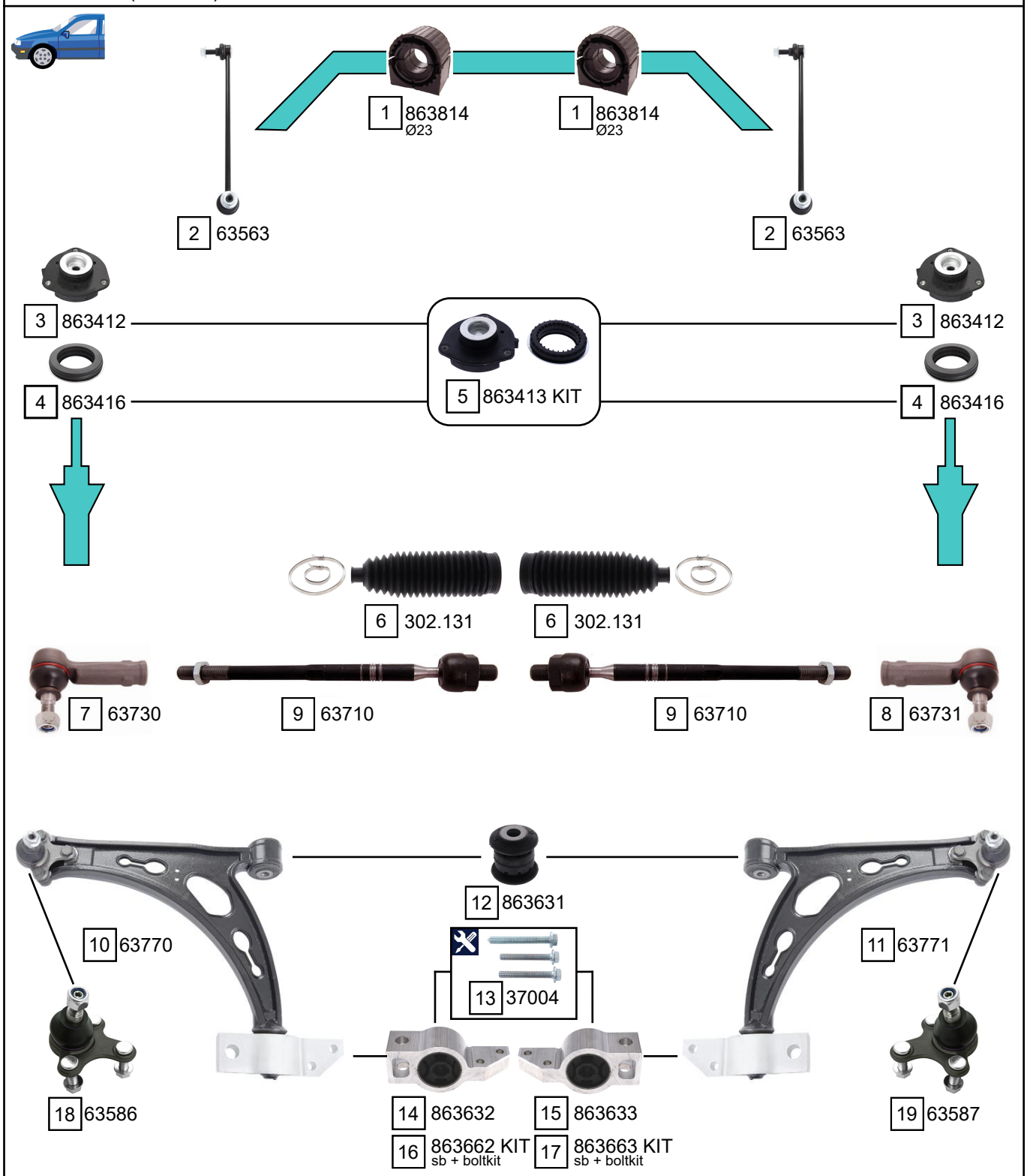

Ref.	Sidem Ref.	Description	OE-number	Measures	Ref.	Sidem Ref.	Description	OE-number	Measures
1	863814	stabiliser mounting	Part of	di:21	11	63771	TCA right wbj	1K0 407 152 AC	c:15.4
2	63563	stabiliser link	5Q0 411 315 A	L:335	12	863631	silentblock for TCA	1K0 407 182	di:12.1 do:40 (*)
3	863412	strut mount	1K0 412 331 B	di:14.2 L:49.5	13	37004	mounting kit	N 910 398 02 S1	th:M10x1.5R
4	863416	bearing	1K0 412 249 B	di:68.5 do:112 L:25.5	14	863632	silentblock for TCA	1K0 199 231 J	di:18.8 (*)
5	863413 KIT	strut mount kit	1K0 412 331 B S1	di:14.2 L:50	15	863633	silentblock for TCA	1K0 199 232 J	di:18.8 (*)
6	302.131	steering rack gaiter	1K0 423 831 A	D:50 d:15 L:193	16	863662 KIT	silentblock kit	1K0 199 231 J S1	
7	63730	tie rod end left	1K0 423 811 J S1	c:13.2 th:FM16x1.5R	17	863663 KIT	silentblock kit	1K0 199 232 J S1	
8	63731	tie rod end right	1K0 423 812 J S1	c:13.2 th:FM16x1.5R	18	63586	ball joint left	1K0 407 365 C	c:15.4
9	63710	axial joint	1K0 423 810 A	th:MM16X1.5R L:312	19	63587	ball joint right	1K0 407 366 C	c:15.4
10	63770	TCA left wbj	1K0 407 151 AC	c:15.4					

Copyright 2021

VOLKSWAGEN
SCIROCCO

SIDEM Experts know why

SCIROCCO (137, 138) 09/2008 - 11/2017

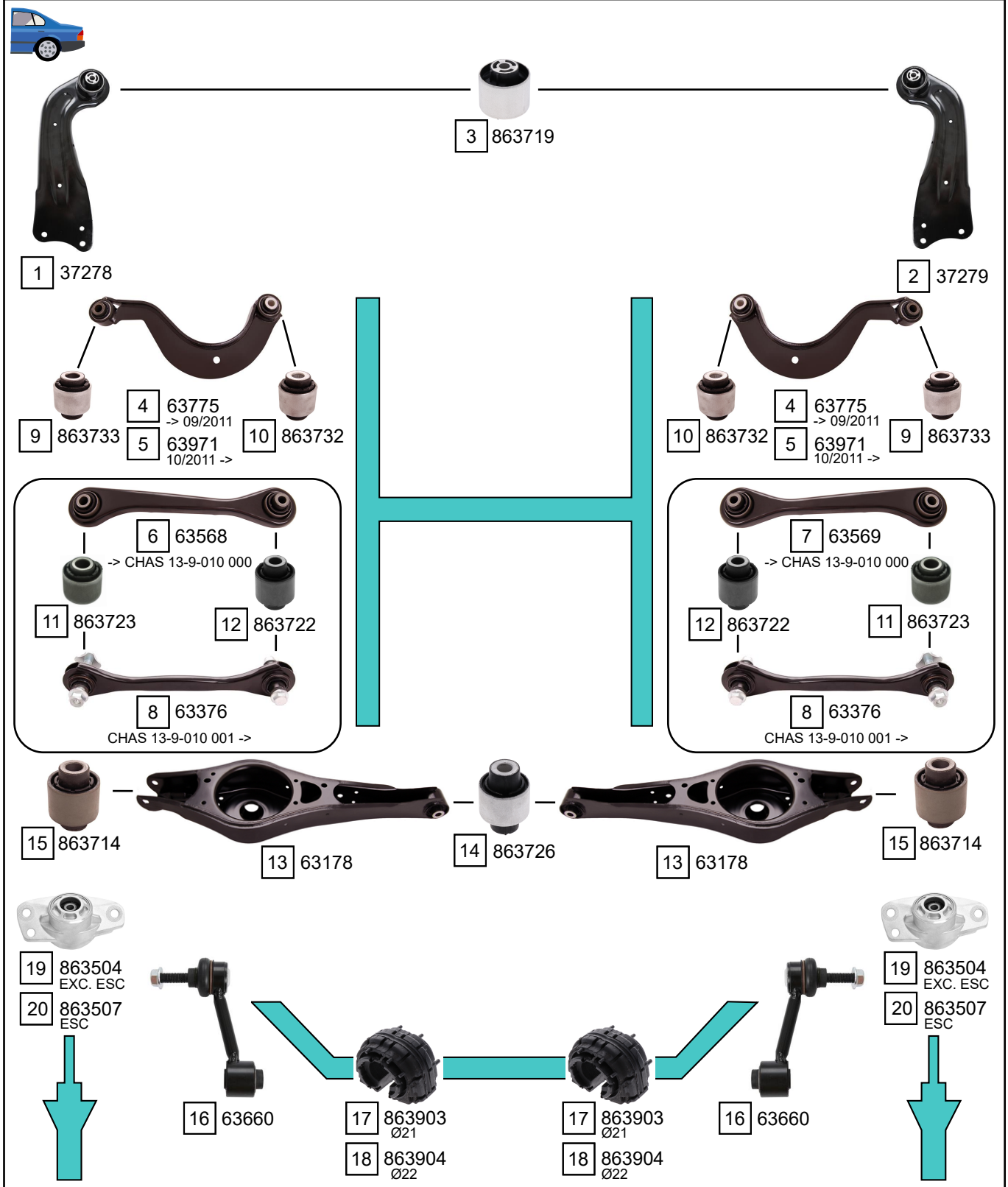

Ref.	Sidem Ref.	Description	OE-number	Measures	Ref.	Sidem Ref.	Description	OE-number	Measures
1	37278	TCA left	1K0 505 223 K	L:373	11	863723	silentblock for TCA	Part of	di:14.2 do:40.1 (*)
2	37279	TCA right	1K0 505 224 K	L:373	12	863722	silentblock for TCA	Part of	di:12.1 do:40.4 (*)
3	863719	mounting axle body	3C0 505 541	di:12.2 do:60.2 (*)	13	63178	TCA	1K0 505 311 AB	
4	63775	track rod	1K0 505 323 N	L:305.5	14	863726	silentblock for TCA	Part of	di:12.1 do:42 (*)
5	63971	track rod	5Q0 505 323 C	L:305	15	863714	silentblock for TCA	1K0 505 553 A	di:12.2 do:37.4 (*)
6	63568	track rod	1K0 501 529 F	L:298	16	63660	stabiliser link rear axle	1K0 505 465 K	L:95
7	63569	track rod	1K0 501 530 C	L:298	17	863903	stabiliser mounting	1K0 511 327 AR	di:18.5
8	63376	track rod	1K0 501 529 H	L:298	18	863904	stabiliser mounting	1K0 511 327 AS	di:19.5
9	863733	silentblock for TCA	Part of	di:14.3 do:38.2 (*)	19	863504	strut mount	1K0 513 353 G	di:10.5 do:63 L:62
10	863732	silentblock for TCA	Part of	di:12.1 do:38.3 (*)	20	863507	strut mount	3C0 513 353 C	di:10.5 do:68 L:62.7

Copyright 2021

VOLKSWAGEN
SHARAN

SHARAN (7M8, 7M9, 7M6) 05/1995 - 03/2010

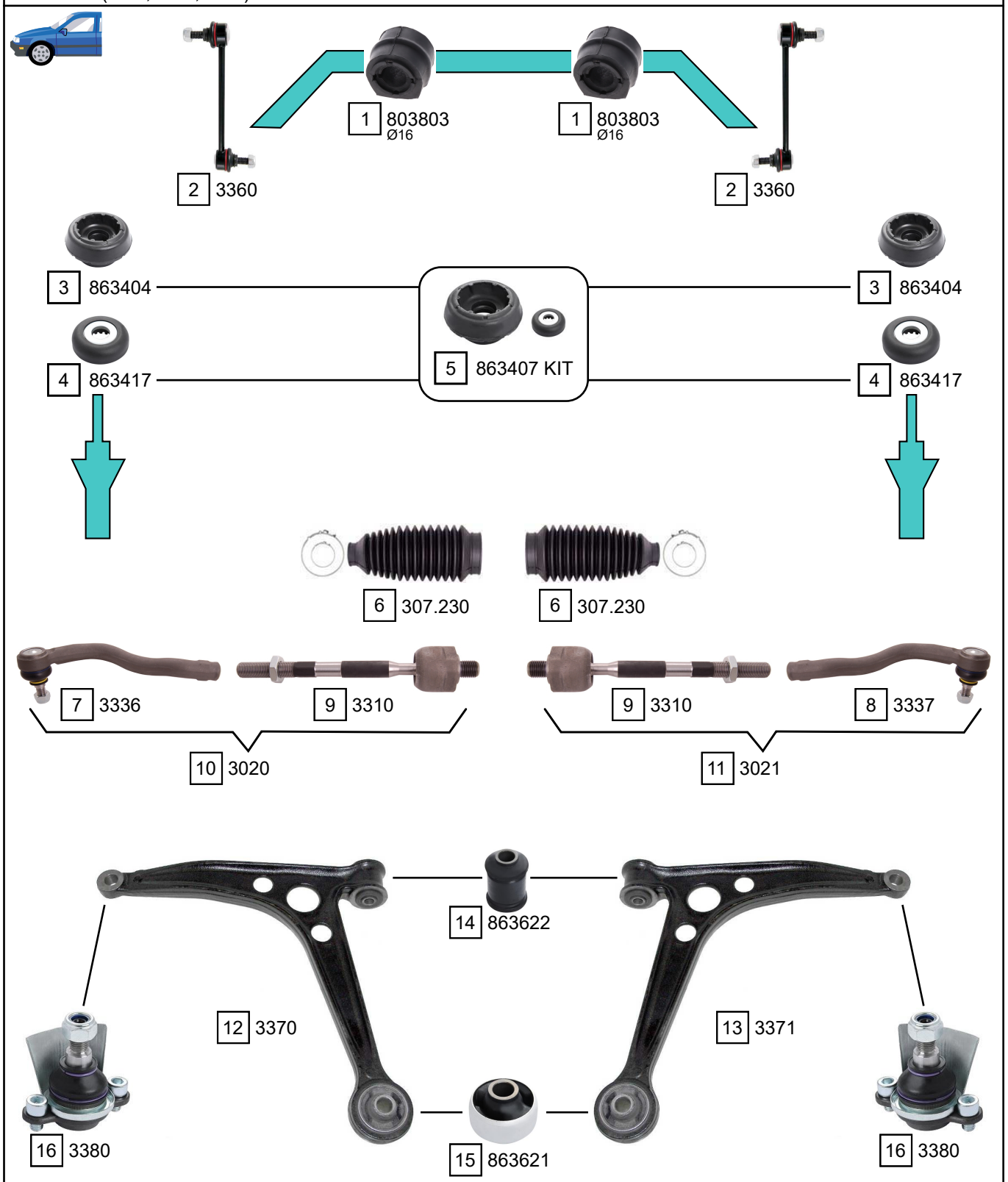

Ref.	Sidem Ref.	Description	OE-number	Measures	Ref.	Sidem Ref.	Description	OE-number	Measures
1	803803	stabiliser mounting	7M0 411 031	di:16	9	3310	axial joint	Part of	th:MM14X1.5R L:185
2	3360	stabiliser link	7M3 411 317 C	L:205	10	3020	tie rod left	7M3 422 803 A	c:14.3 L:421
3	863404	strut mount	7M0 412 331	di:26.5 do:96.7 L:50	11	3021	tie rod right	7M3 422 804 A	c:14.3 L:421
4	863417	bearing	1J0 412 249	di:14.3 do:45.3 L:13.4	12	3370	TCA left wobj	7M0 407 151 B	c:18
5	863407 KIT	strut mount kit	7M0 412 331 S1	di:14.3 do:98 L:50	13	3371	TCA right wobj	7M0 407 152 B	c:18
6	307.230	steering rack gaiter	7M3 422 831	D:49 d:10 L:180	14	863622	silentblock for TCA	7M0 501 541	di:14 do:35 (*)
7	3336	tie rod end left	7M3 422 817	c:14.3 th:FM14x1.5R	15	863621	silentblock for TCA	7M0 407 181	di:18 do:60.4 (*)
8	3337	tie rod end right	7M0 422 818	c:14.3 th:FM14x1.5R	16	3380	ball joint	7M3 407 365 C	c:18.6

Copyright 2021

VOLKSWAGEN
SHARAN

SHARAN (7M8, 7M9, 7M6) 05/1995 - 03/2010

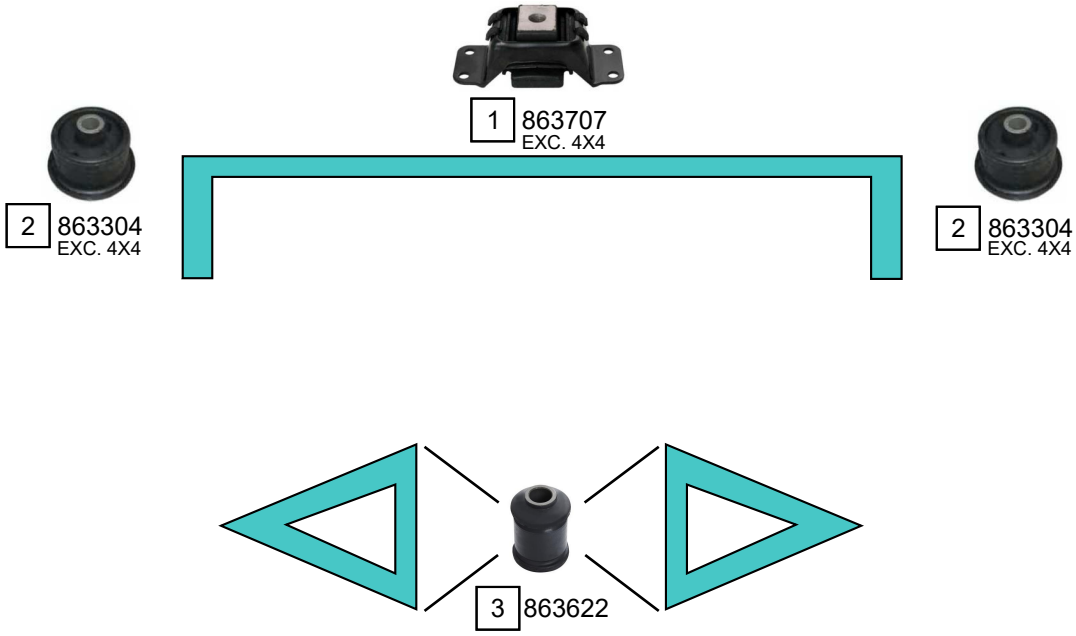

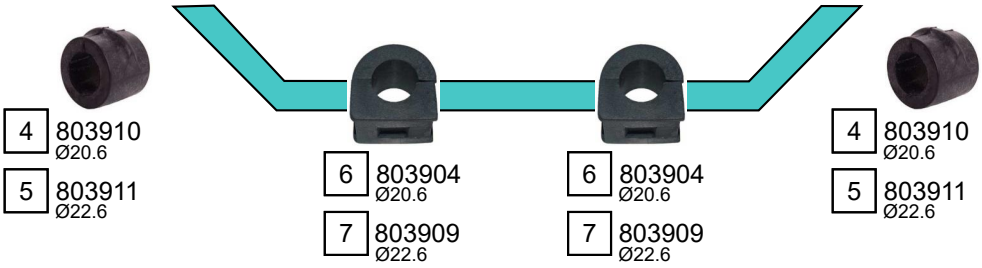

Ref.	Sidem Ref.	Description	OE-number	Measures	Ref.	Sidem Ref.	Description	OE-number	Measures
1	863707	mounting axle body	7M0 505 221 C	di:17	5	803911	stabiliser mounting	7M0 511 414 C	di:22.6
2	863304	mounting axle body	7M0 505 222 B	di:21.5 do:96	6	803904	stabiliser mounting	7M0 511 413 A	di:20.6
3	863622	silentblock for TCA	7M0 501 541	di:14 do:35 (*)	7	803909	stabiliser mounting	7M0 511 413 B	di:22.6
4	803910	stabiliser mounting	7M0 511 414 B	di:20.6					

Copyright 2021

VOLKSWAGEN
SHARAN

SHARAN (7N1, 7N2) 05/2010 ->

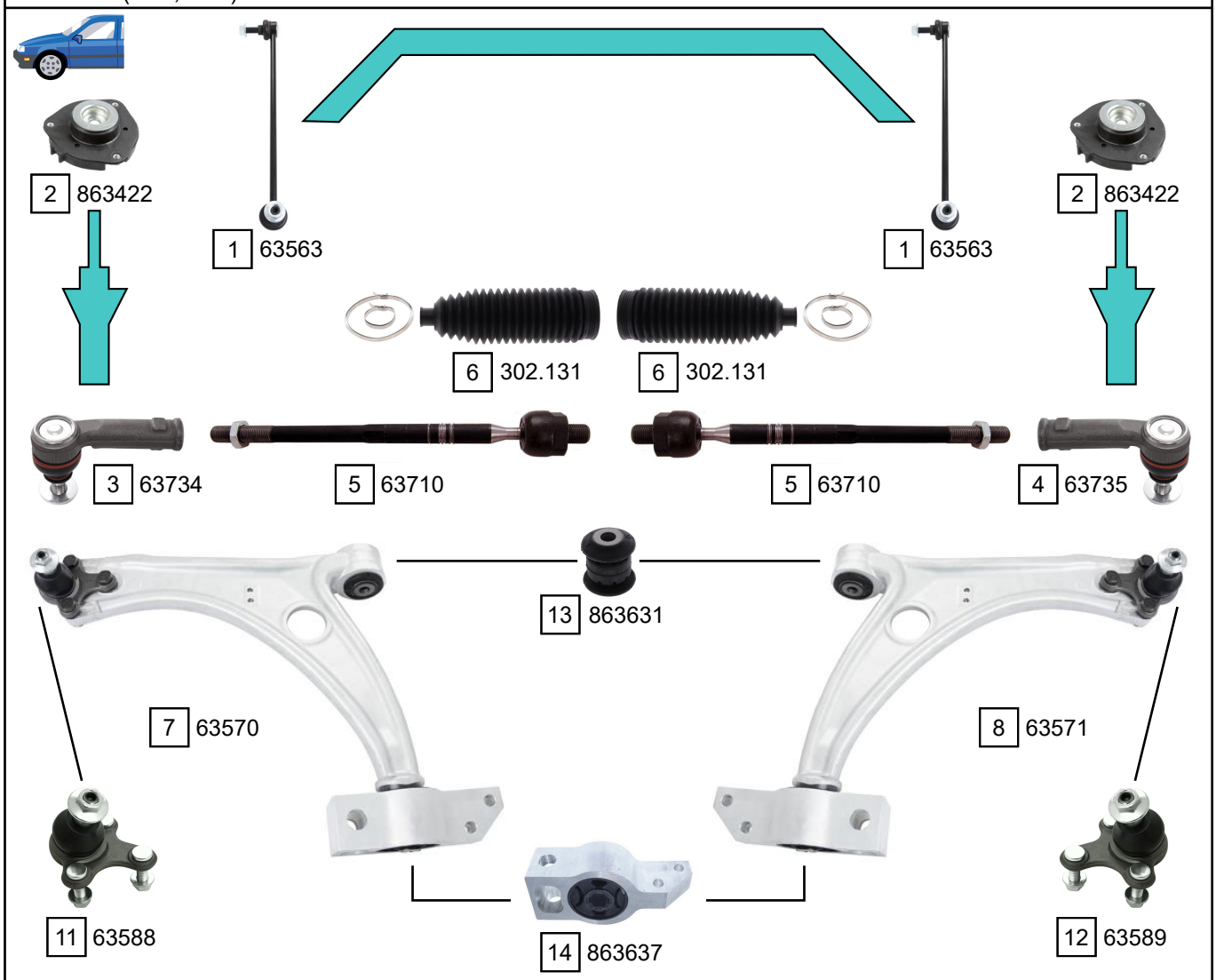

REINFORCED / TAXI 01/2011 ->

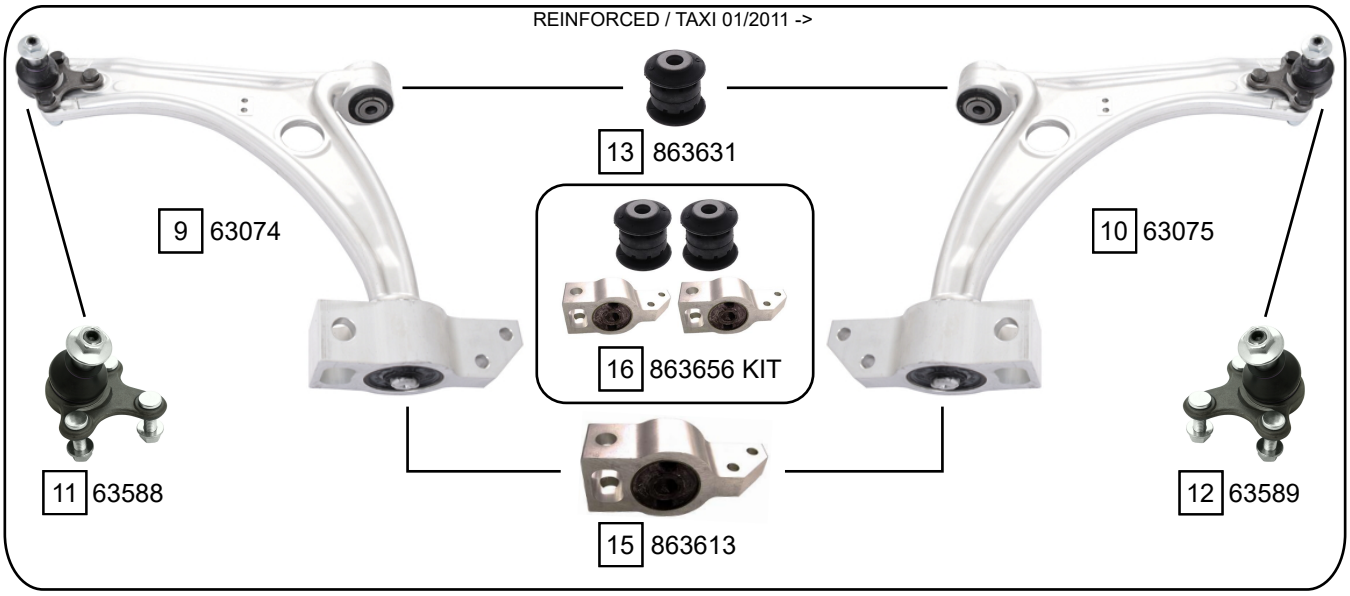

Ref.	Sidem Ref.	Description	OE-number	Measures	Ref.	Sidem Ref.	Description	OE-number	Measures
1	63563	stabiliser link	5Q0 411 315 A	L:335	9	63074	TCA left wbj	3C0 407 151 H S1	c:15.2
2	863422	strut mount	7N0 412 331	di:14.4 do:64.2 L:50	10	63075	TCA right wbj	3C0 407 151 H S2	c:15.2
3	63734	tie rod end left	1K0 423 811 J S2	c:13.2 th:FM16X1.5R	11	63588	ball joint left	3C0 407 365 B	c:15.2
4	63735	tie rod end right	1K0 423 812 J S2	c:13.2 th:FM16X1.5R	12	63589	ball joint right	3C0 407 366 B	c:15.2
5	63710	axial joint	1K0 423 810 A	th:MM16X1.5R L:312	13	863631	silentblock for TCA	1K0 407 182	di:12.1 do:40 (*)
6	302.131	steering rack gaiter	1K0 423 831 A	D:50 d:15 L:193	14	863637	silentblock for TCA	3C0 199 231 D	di:18.6 (*)
7	63570	TCA left wbj	3C0 407 151 G S1	c:15.2	15	863613	silentblock for TCA	3C0 199 231 F	di:18.6 do:62 (*)
8	63571	TCA right wbj	3C0 407 151 G S2	c:15.2	16	863656 KIT	silentblock kit	3C0 199 231 F S1	

Copyright 2021

VOLKSWAGEN
SHARAN

SIDEM
Experts know why

SHARAN (7N1, 7N2) 05/2010 ->

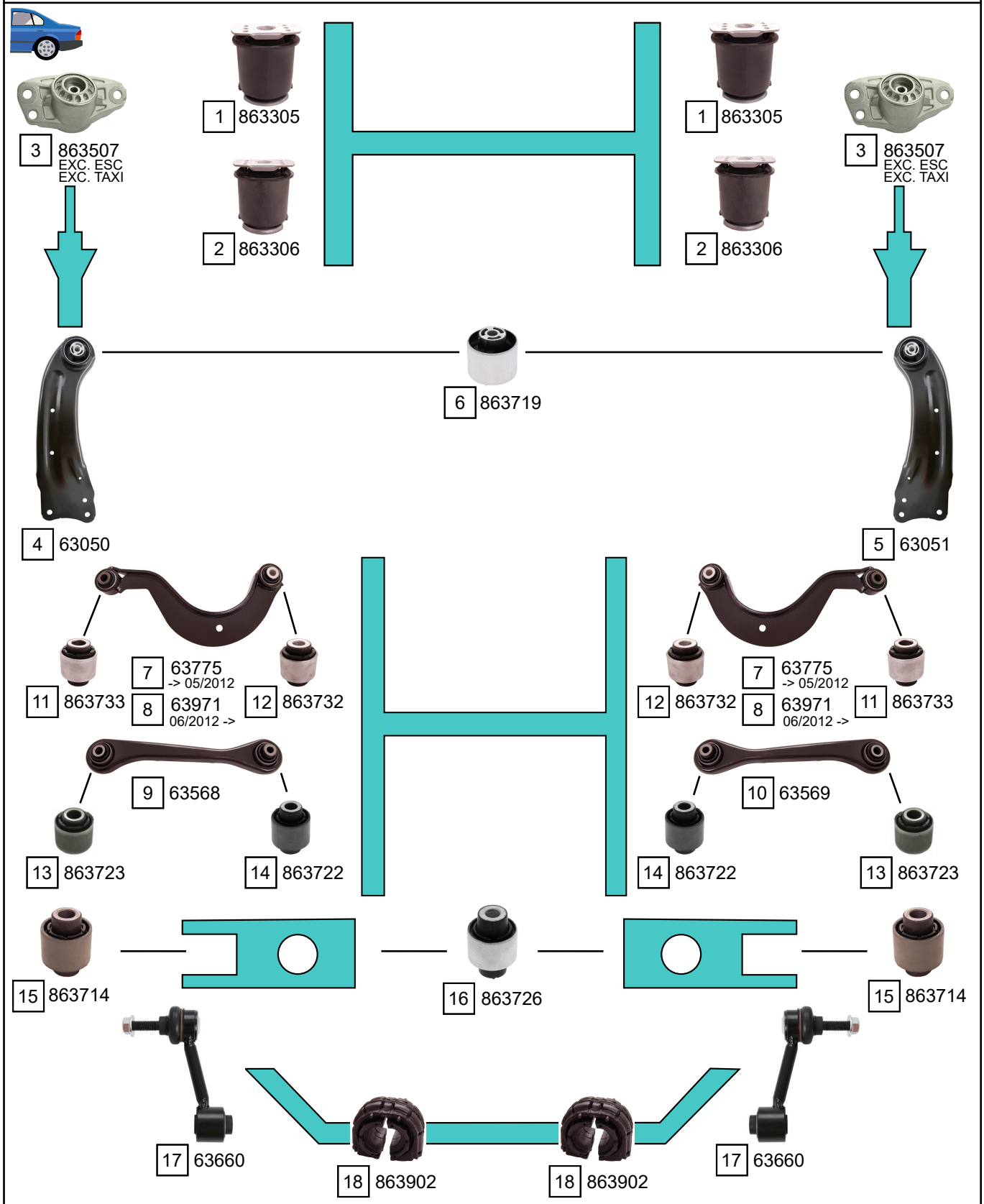

Ref.	Sidem Ref.	Description	OE-number	Measures	Ref.	Sidem Ref.	Description	OE-number	Measures
1	863305	mounting axle body	1K0 505 145 J	di:18 do:70	10	63569	track rod	1K0 501 530 C	L:298
2	863306	mounting axle body	1K0 505 145 K	di:18 do:70	11	863733	silentblock for TCA	Part of	di:14.3 do:38.2 (*)
3	863507	strut mount	3C0 513 353 C	di:10.5 do:68 L:62.7	12	863732	silentblock for TCA	Part of	di:12.1 do:38.3 (*)
4	63050	TCA left	3C0 505 223 E	L:376.5	13	863723	silentblock for TCA	Part of	di:14.2 do:40.1 (*)
5	63051	TCA right	3C0 505 224 E	L:376.5	14	863722	silentblock for TCA	Part of	di:12.1 do:40.4 (*)
6	863719	mounting axle body	3C0 505 541	di:12.2 do:60.2 (*)	15	863714	silentblock for TCA	1K0 505 553 A	di:12.2 do:37.4 (*)
7	63775	track rod	1K0 505 323 N	L:305.5	16	863726	silentblock for TCA	Part of	di:12.1 do:42 (*)
8	63971	track rod	5Q0 505 323 C	L:305	17	63660	stabiliser link rear axle	1K0 505 465 K	L:95
9	63568	track rod	1K0 501 529 F	L:298	18	863902	stabiliser mounting	1K0 511 327 AQ	di:19

Copyright 2021

VOLKSWAGEN
T-CROSS

T-CROSS (C11) 12/2018 ->

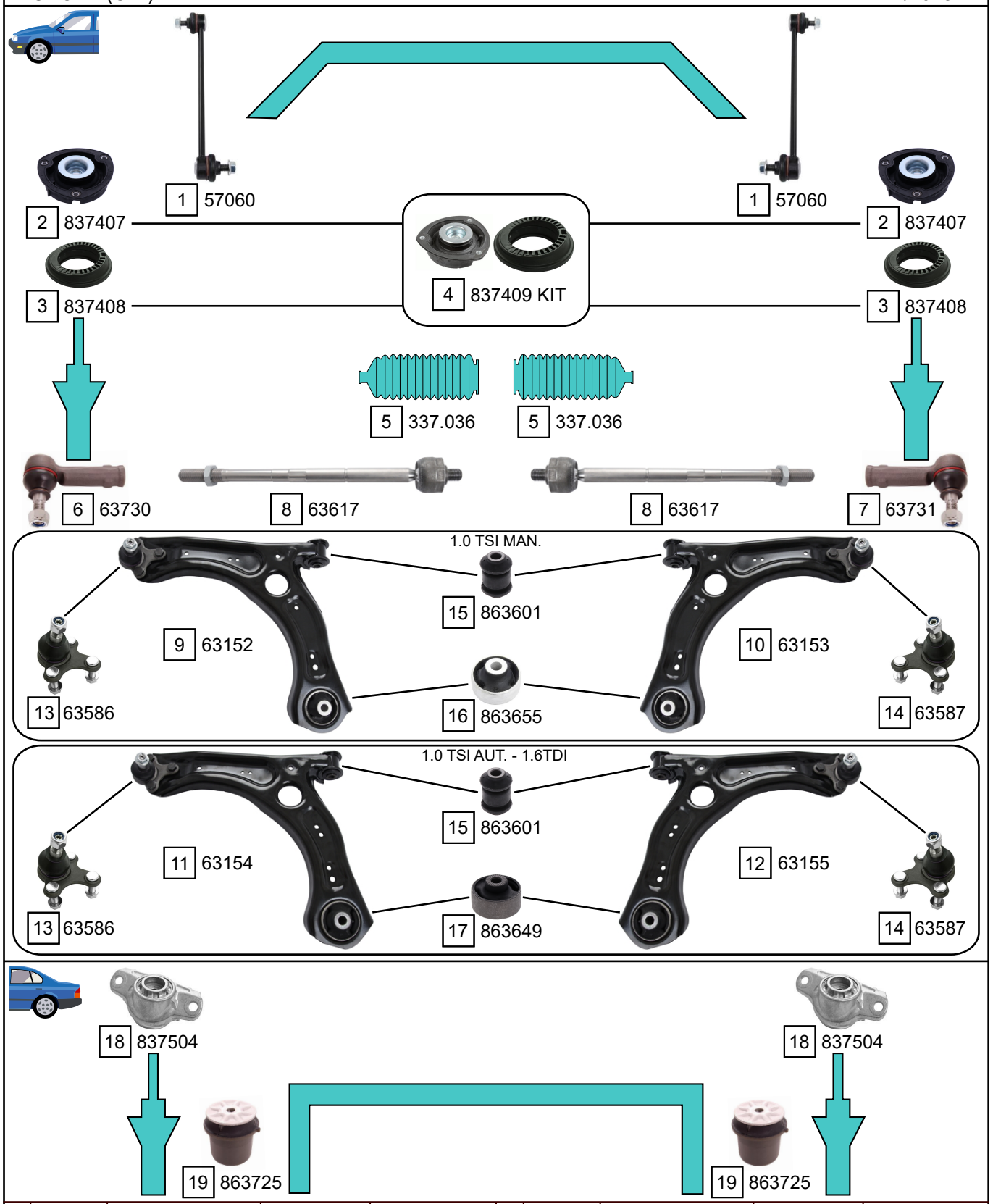

Ref.	Sidem Ref.	Description	OE-number	Measures	Ref.	Sidem Ref.	Description	OE-number	Measures
1	57060	stabiliser link	6R0 411 315	L:270	11	63154	TCA left wbj	2Q0 407 151 E S1	c:15.4
2	837407	strut mount	5Q0 412 331 E	di:14.6 do:64.1 L:42	12	63155	TCA right wbj	2Q0 407 152 E S1	c:15.4
3	837408	bearing	5Q0 412 249 F	di:74 do:127 L:38.6	13	63586	ball joint left	1K0 407 365 C	c:15.4
4	837409 KIT	strut mount kit	5Q0 412 331 E S1	di:14.6 do:127	14	63587	ball joint right	1K0 407 366 C	c:15.4
5	337.036	steering rack gaiter	2Q0 423 831	D:54.5 d:14.5 L:192	15	863601	silentblock for TCA	357 407 182	di:12 do:32.6 (*)
6	63730	tie rod end left	1K0 423 811 J S1	c:13.2 th:FM16x1.5R	16	863655	silentblock for TCA	2Q0 407 183 B	di:12.9 do:60.5 (*)
7	63731	tie rod end right	1K0 423 812 J S1	c:13.2 th:FM16x1.5R	17	863649	silentblock for TCA	5Q0 407 183 E	di:12.9 do:65 (*)
8	63617	axial joint	2Q0 423 810 D	th:MM14X1.5R L:315	18	837504	strut mount	5Q0 513 353 H	di:11.2 do:56.5 L:60.7
9	63152	TCA left wbj	2Q0 407 151 D S1	c:15.4	19	863725	mounting axle body	5Q0 501 541 C	di:12.5 do:72
10	63153	TCA right wbj	2Q0 407 152 D S1	c:15.4					

Copyright 2021

VOLKSWAGEN
TIGUAN

TIGUAN (5N_) 09/2007 - 07/2018

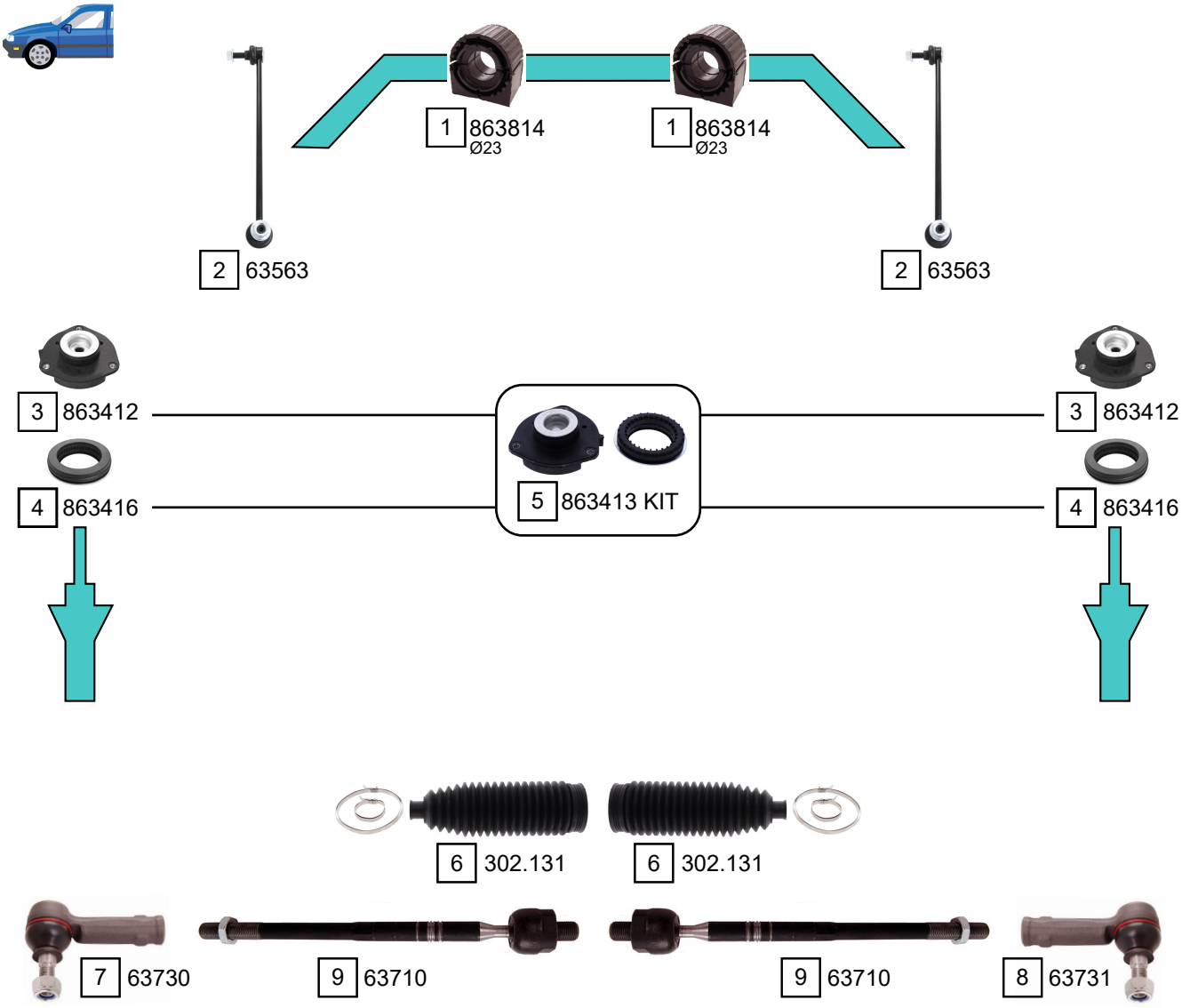

Ref.	Sidem Ref.	Description	OE-number	Measures	Ref.	Sidem Ref.	Description	OE-number	Measures
1	863814	stabiliser mounting	Part of	di:21	6	302.131	steering rack gaiter	1K0 423 831 A	D:50 d:15 L:193
2	63563	stabiliser link	5Q0 411 315 A	L:335	7	63730	tie rod end left	1K0 423 811 J S1	c:13.2 th:FM16x1.5R
3	863412	strut mount	1K0 412 331 B	di:14.2 L:49.5	8	63731	tie rod end right	1K0 423 812 J S1	c:13.2 th:FM16x1.5R
4	863416	bearing	1K0 412 249 B	di:68.5 do:112 L:25.5	9	63710	axial joint	1K0 423 810 A	th:MM16X1.5R L:312
5	863413 KIT	strut mount kit	1K0 412 331 B S1	di:14.2 L:50					

Copyright 2021

VOLKSWAGEN
TIGUAN

TIGUAN (5N_) 09/2007 - 07/2018

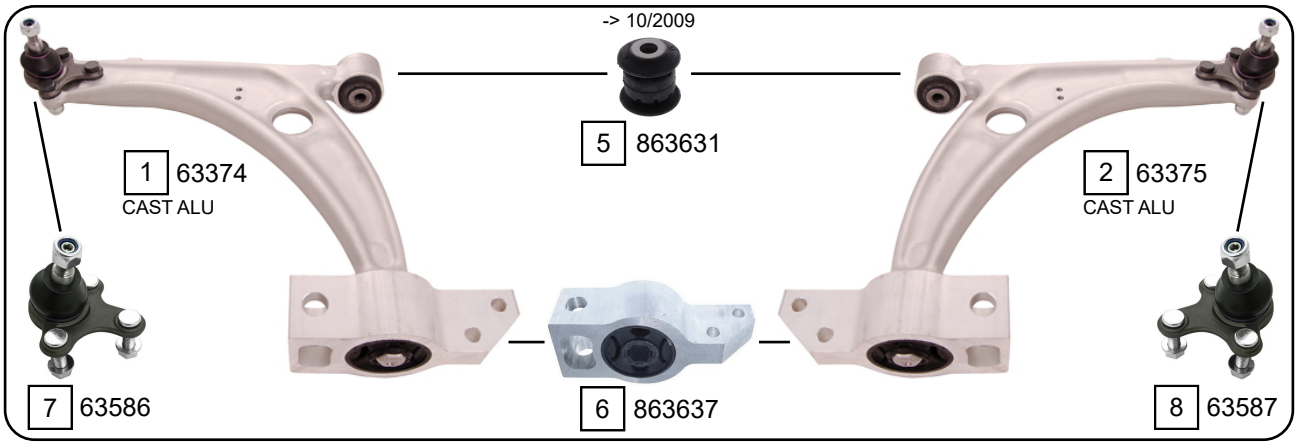

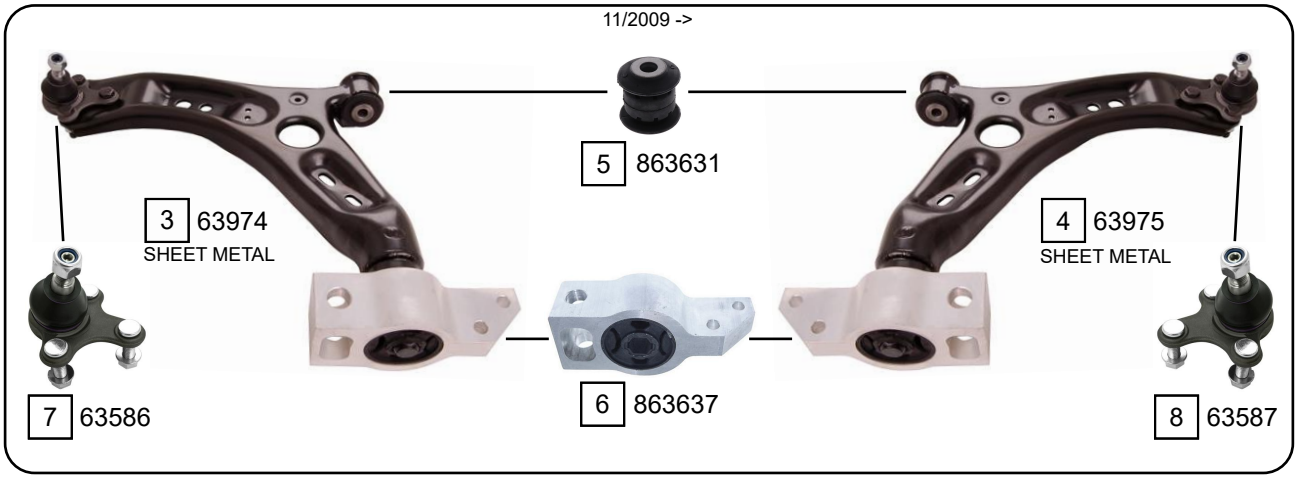

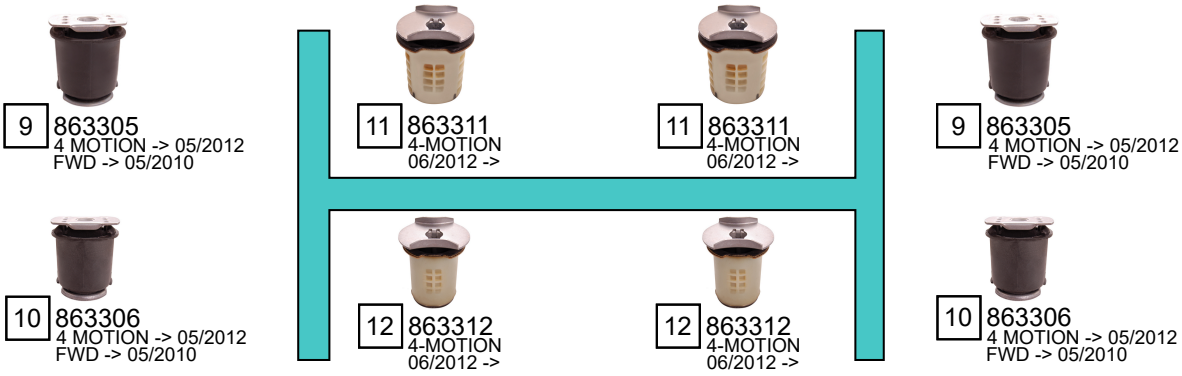

Ref.	Sidem Ref.	Description	OE-number	Measures	Ref.	Sidem Ref.	Description	OE-number	Measures
1	63374	TCA left wbj	3C0 407 151 E S3	c:15.4	7	63586	ball joint left	1K0 407 365 C	c:15.4
2	63375	TCA right wbj	3C0 407 151 E S4	c:15.4	8	63587	ball joint right	1K0 407 366 C	c:15.4
3	63974	TCA left wbj	5N0 407 151 S1	c:15.4	9	863305	mounting axle body	1K0 505 145 J	di:18 do:70
4	63975	TCA right wbj	5N0 407 152 S1	c:15.4	10	863306	mounting axle body	1K0 505 145 K	di:18 do:70
5	863631	silentblock for TCA	1K0 407 182	di:12.1 do:40 (*)	11	863311	mounting axle body	5Q0 505 145 F	di:18.2 do:61.5
6	863637	silentblock for TCA	3C0 199 231 D	di:18.6 (*)	12	863312	mounting axle body	5Q0 505 145 E	di:18.6 do:53.5

Copyright 2021

VOLKSWAGEN
TIGUAN

TIGUAN (5N_) 09/2007 - 07/2018

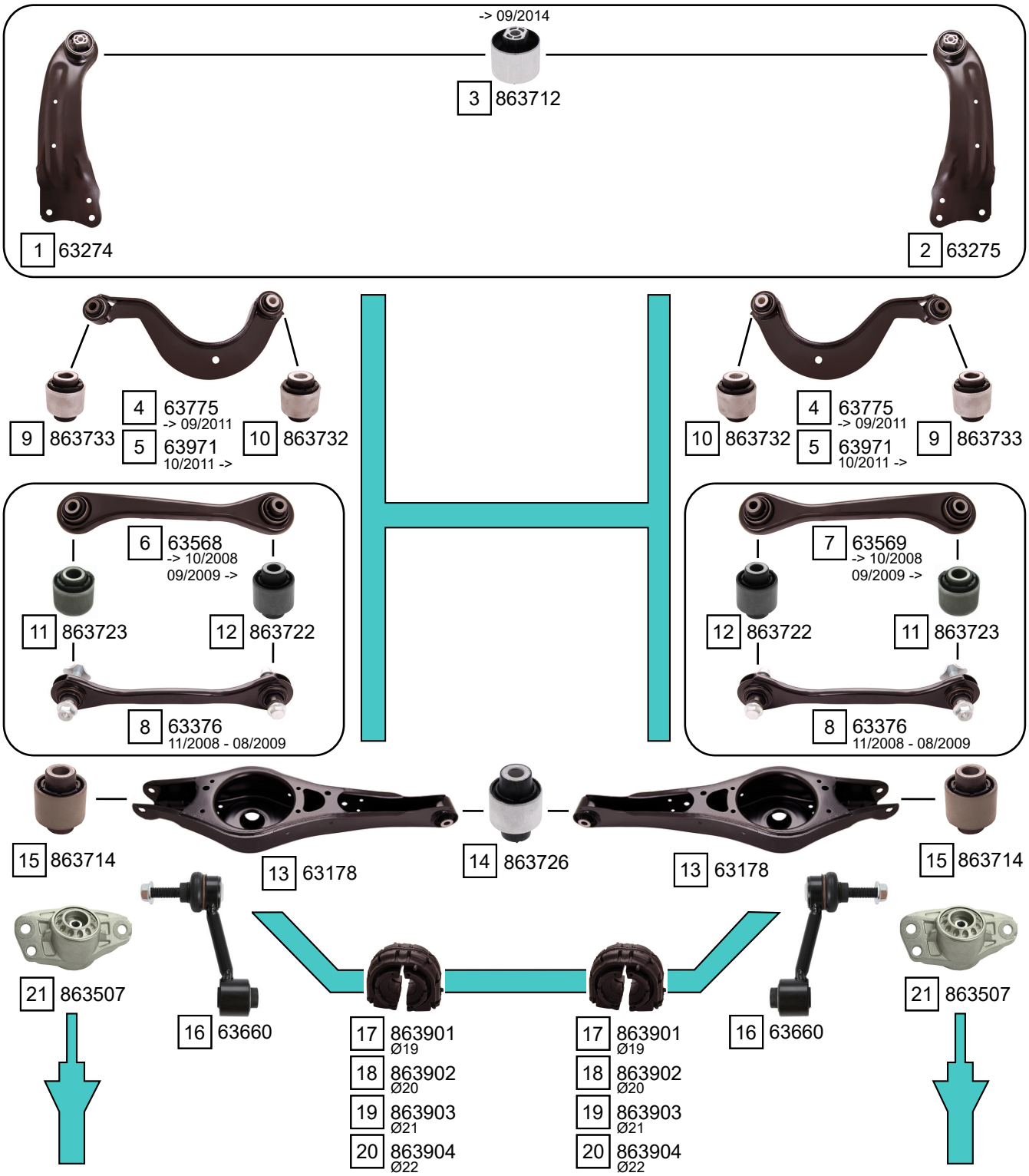

Ref.	Sidem Ref.	description	OE-number	measures	Ref.	Sidem Ref.	description	OE-number	measures
1	63274	TCA left	3C0 505 223 D	L:376	12	863722	silentblock for TCA	Part of	di:12.1 do:40.4 (*)
2	63275	TCA right	3C0 505 224 D	L:376	13	63178	TCA	1K0 505 311 AB	
3	863712	silentblock for TCA	1K0 505 541 B	di:12.2 do:60.2 (*)	14	863726	silentblock for TCA	Part of	di:12.1 do:42 (*)
4	63775	track rod	1K0 505 323 N	L:305.5	15	863714	silentblock for TCA	1K0 505 553 A	di:12.2 do:37.4 (*)
5	63971	track rod	5Q0 505 323 C	L:305	16	63660	stabiliser link rear axle	1K0 505 465 K	L:95
6	63568	track rod	1K0 501 529 F	L:298	17	863901	stabiliser mounting	1K0 511 327 AP	di:17
7	63569	track rod	1K0 501 530 C	L:298	18	863902	stabiliser mounting	1K0 511 327 AQ	di:19
8	63376	track rod	1K0 501 529 H	L:298	19	863903	stabiliser mounting	1K0 511 327 AR	di:18.5
9	863733	silentblock for TCA	Part of	di:14.3 do:38.2 (*)	20	863904	stabiliser mounting	1K0 511 327 AS	di:19.5
10	863732	silentblock for TCA	Part of	di:12.1 do:38.3 (*)	21	863507	strut mount	3C0 513 353 C	di:10.5 do:68 L:62.7
11	863723	silentblock for TCA	Part of	di:14.2 do:40.1 (*)					

Copyright 2021

VOLKSWAGEN
TIGUAN

TIGUAN (AD1_) 02/2016 ->
TIGUAN ALLSPACE (BW2) 03/2017 ->

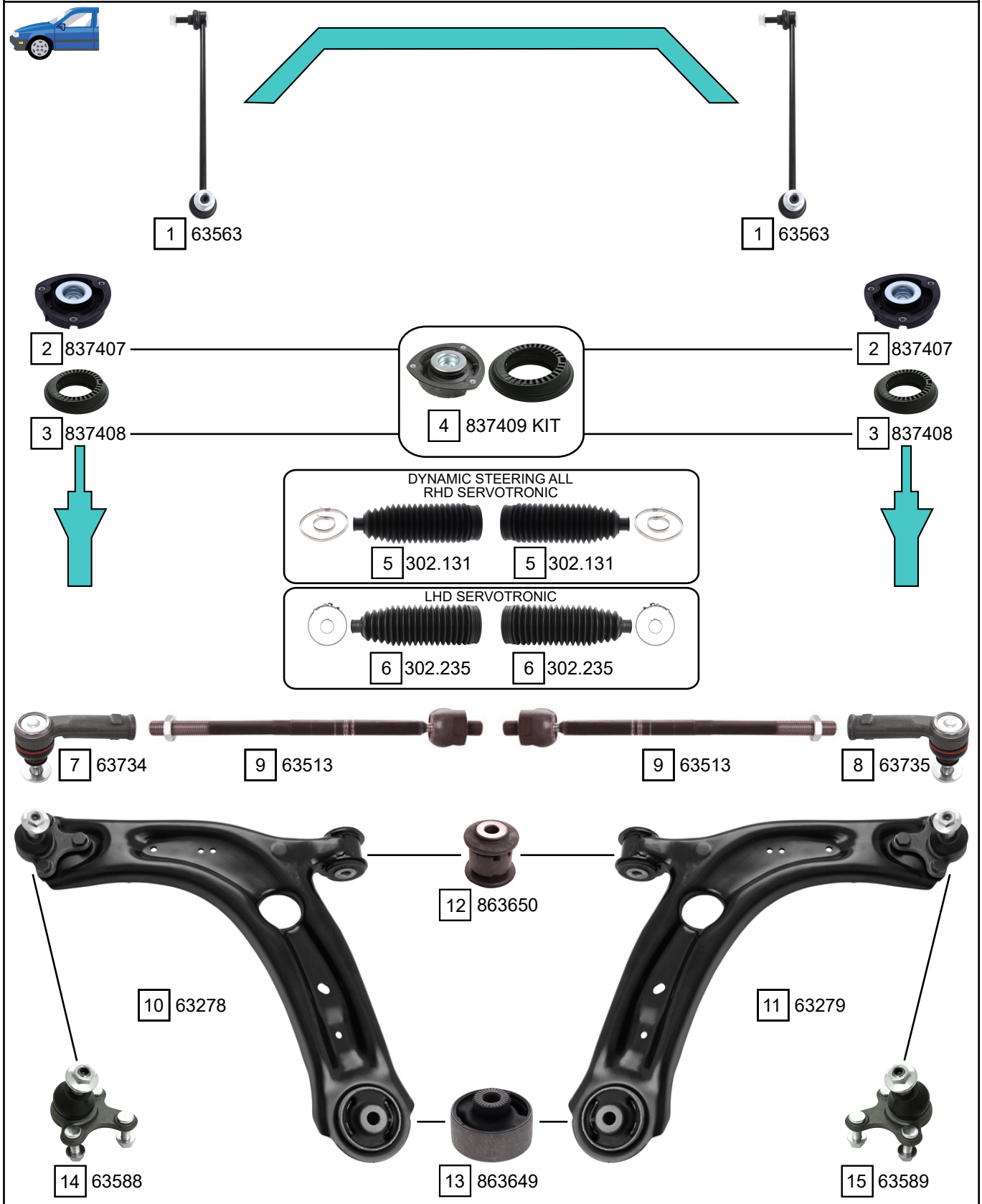

Ref.	Sidem Ref.	Description	OE-number	Measures	Ref.	Sidem Ref.	Description	OE-number	Measures
1	63563	stabiliser link	5Q0 411 315 A	L:335	9	63513	axial joint	561 423 810	th:MM16X1.5R L:330
2	837407	strut mount	5Q0 412 331 E	di:14.6 do:64.1 L:42	10	63278	TCA left wbj	3Q0 407 151 E S1	c:15.2
3	837408	bearing	5Q0 412 249 F	di:74 do:127 L:38.6	11	63279	TCA right wbj	3Q0 407 152 E S1	c:15.2
4	837409 KIT	strut mount kit	5Q0 412 331 E S1	di:14.6 do:127	12	863650	silentblock for TCA	5Q0 407 182	di:12.1 do:40.1 (*)
5	302.131	steering rack gaiter	1K0 423 831 A	D:50 d:15 L:193	13	863649	silentblock for TCA	5Q0 407 183 E	di:12.9 do:65 (*)
6	302.235	steering rack gaiter	5Q0 423 831	D:53.5 d:15.5 L:191	14	63588	ball joint left	3C0 407 365 B	c:15.2
7	63734	tie rod end left	1K0 423 811 J S2	c:13.2 th:FM16X1.5R	15	63589	ball joint right	3C0 407 366 B	c:15.2
8	63735	tie rod end right	1K0 423 812 J S2	c:13.2 th:FM16X1.5R					

Copyright 2021

VOLKSWAGEN
TIGUAN

TIGUAN (AD1_) 02/2016 ->
TIGUAN ALLSPACE (BW2) 03/2017 ->

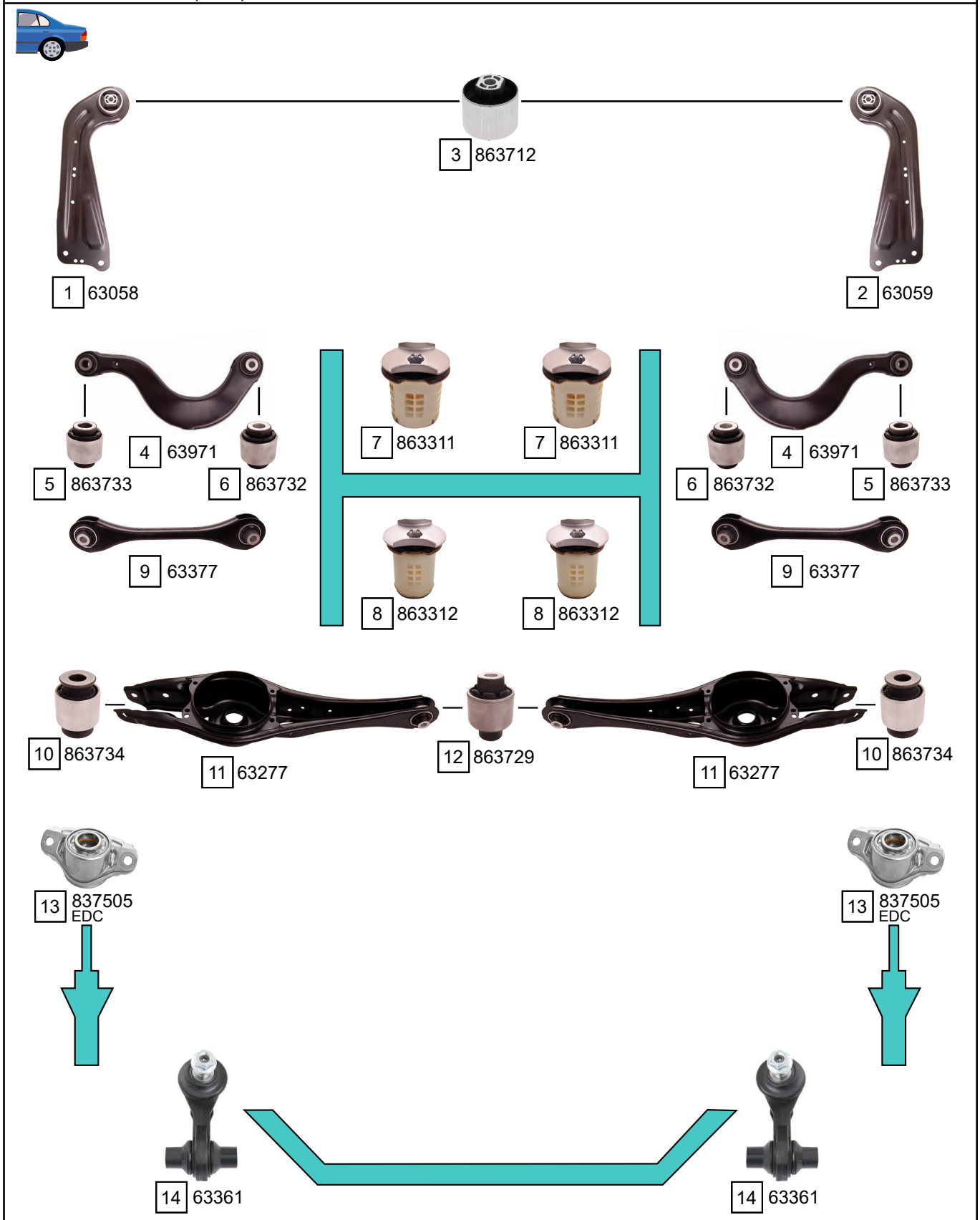

Ref.	Sidem Ref.	Description	OE-number	Measures	Ref.	Sidem Ref.	Description	OE-number	Measures
1	63058	TCA left	5QF 505 223 C		8	863312	mounting axle body	5Q0 505 145 E	di:18.6 do:53.5
2	63059	TCA right	5QF 505 224 C		9	63377	track rod	5Q0 501 529 F	L:282
3	863712	silentblock for TCA	1K0 505 541 B	di:12.2 do:60.2 (*)	10	863734	silentblock for TCA	5Q0 505 553 A	di:12.4 do:36.4 (*)
4	63971	track rod	5Q0 505 323 C	L:305	11	63277	TCA	3Q0 505 311 G	
5	863733	silentblock for TCA	Part of	di:14.3 do:38.2 (*)	12	863729	silentblock for TCA	Part of	di:12.1 do:44.3 (*)
6	863732	silentblock for TCA	Part of	di:12.1 do:38.3 (*)	13	837505	strut mount	5Q0 513 353 G	di:10.2 do:65.8 L:63.3
7	863311	mounting axle body	5Q0 505 145 F	di:18.2 do:61.5	14	63361	stabiliser link rear axle	5Q0 505 465 C	L:70

Copyright 2021

VOLKSWAGEN
TOUAREG

TOUAREG (7LA, 7L6, 7L7) 10/2002 - 05/2010

1 837404
EXC. AIR SUSP.

4 63565

2 863815
Ø35

3 863816
Ø37

2 863815
Ø35

3 863816
Ø37

4 63565

1 837404
EXC. AIR SUSP.

5 305.038

5 305.038

6 63732

8 63613

9 63626

8 63613

7 63733

10 63627

UPPER

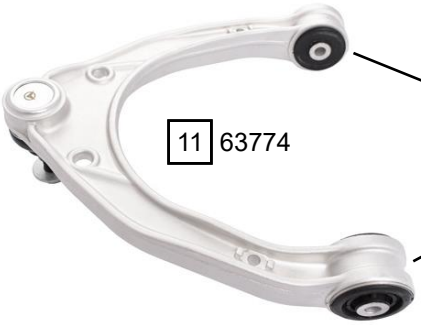

11 63774

12 863636

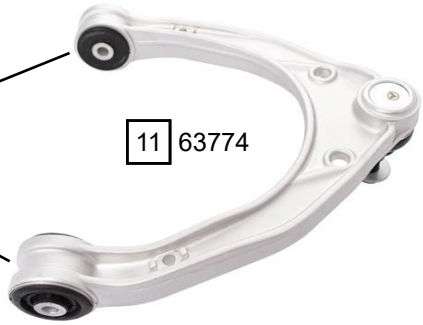

11 63774

Ref.	Sidem Ref.	Description	OE-number	Measures	Ref.	Sidem Ref.	Description	OE-number	Measures
1	837404	strut mount	7L0 412 327 A	di:12.2 L:38	7	63733	tie rod end	7L0 422 818 D	c:16.5 th:FM16X1.5R
2	863815	stabiliser mounting	7L0 411 313 H S1	di:34	8	63613	axial joint	Part of	th:MM16X1.5R L:293
3	863816	stabiliser mounting	7L0 411 313 J S1	di:36	9	63626	tie rod	7L0 422 803 D	c:16.5
4	63565	stabiliser link	7L0 411 317	L:197	10	63627	tie rod	7L0 422 804 D	c:16.5
5	305.038	steering rack gaiter	7L0 422 831 A	D:66 d:16 L:195	11	63774	TCA wbj	7L0 407 021 B	c:17
6	63732	tie rod end	7L0 422 817 D	c:16.5 th:FM16X1.5R	12	863636	silentblock for TCA	7L0 407 077	di:10.2 do:40 (*)

Copyright 2021

VOLKSWAGEN
TOUAREG

TOUAREG (7LA, 7L6, 7L7) 10/2002 - 05/2010

LOWER -> 06/2008

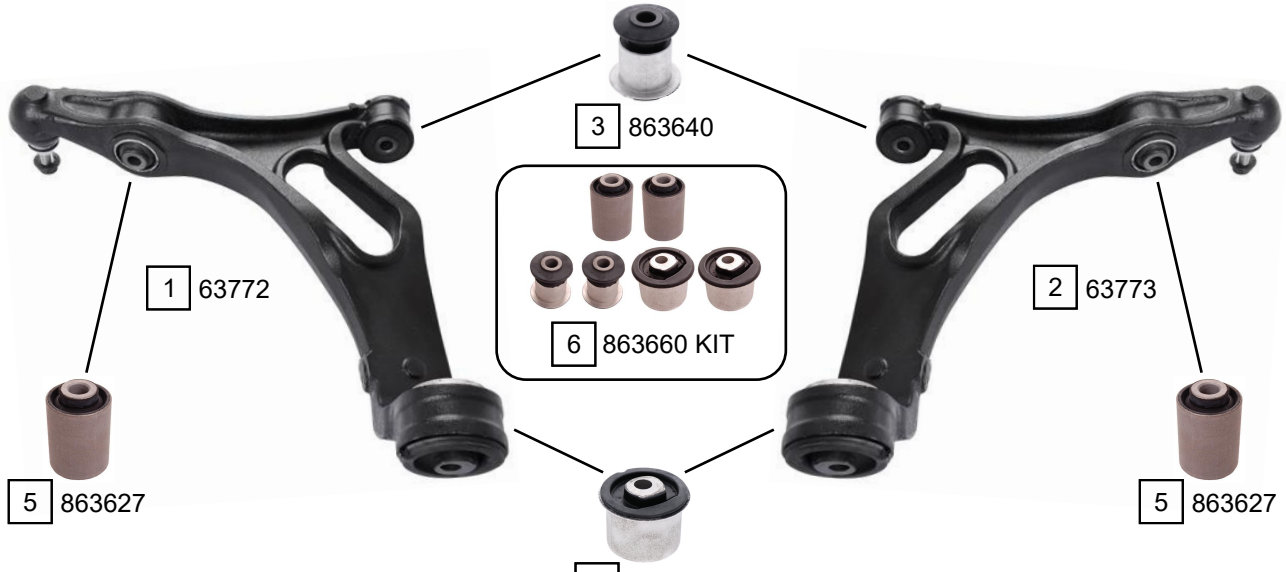

LOWER 06/2008 ->

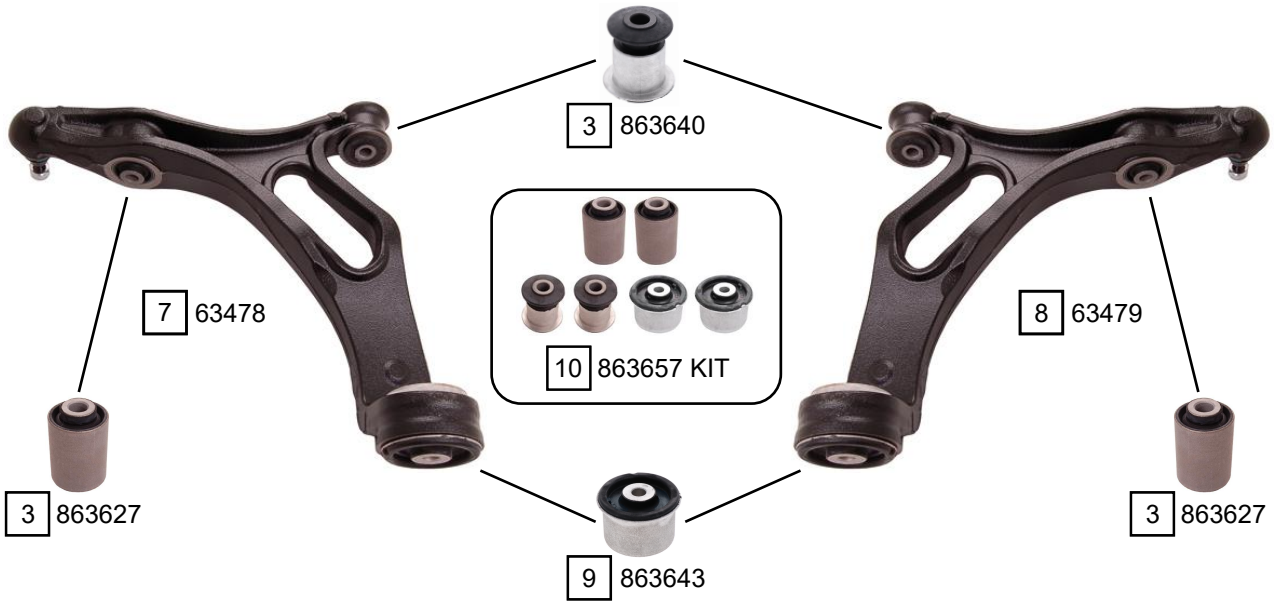

Ref.	Sidem Ref.	Description	OE-number	Measures	Ref.	Sidem Ref.	Description	OE-number	Measures
1	63772	TCA left wbj	7L0 407 151 H	c:20.6	6	863660 KIT	silentblock kit	7L0 407 182 E S2	
2	63773	TCA right wbj	7L0 407 152 H	c:20.6	7	63478	TCA left wbj	7L0 407 151 K	c:20.6
3	863640	silentblock for TCA	7L0 407 183 A	di:14.3 do:40 (*)	8	63479	TCA right wbj	7L0 407 152 K	c:20.6
4	863641	silentblock for TCA	7L0 407 182 E	di:14.3 do:60.3 (*)	9	863643	silentblock for TCA	7L0 407 182 G	di:14.3 do:72.2 (*)
5	863627	silentblock for TCA	7L0 412 333 A	di:14.2 do:48 (*)	10	863657 KIT	silentblock kit	7L0 407 182 G S1	

Copyright 2021

TOUAREG (7LA, 7L6, 7L7) 10/2002 - 05/2010

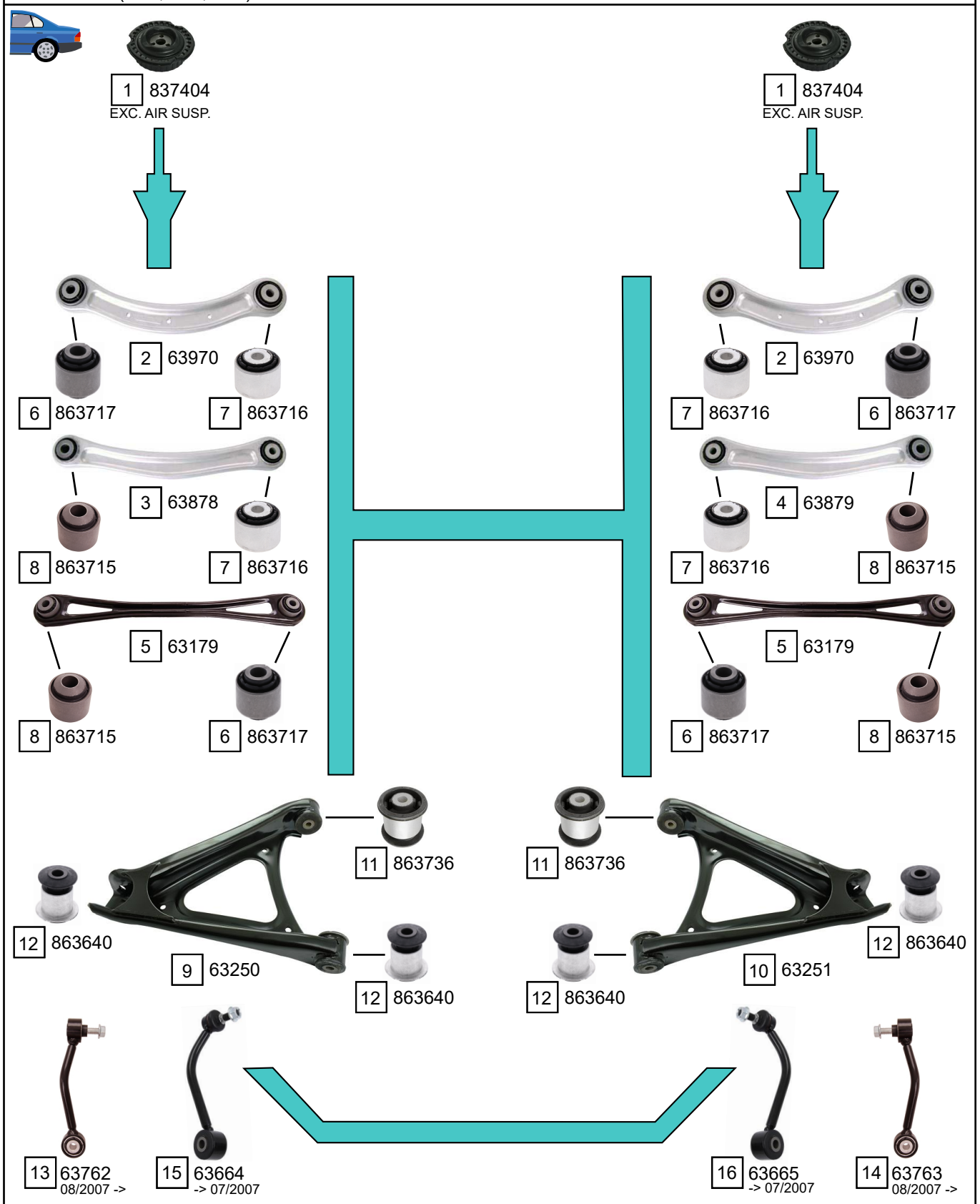

Ref.	Sidem Ref.	Description	OE-number	Measures	Ref.	Sidem Ref.	Description	OE-number	Measures
1	837404	strut mount	7L0 412 327 A	di:12.2 L:38	9	63250	TCA left wobj	7L0 505 311 B	
2	63970	TCA	7L0 505 323 A	L:300	10	63251	TCA right wobj	7L0 505 312 B	
3	63878	TCA left	7L0 505 397	L:360	11	863736	silentblock for TCA	Part of	di:14.1 do:60
4	63879	TCA right	7L0 505 398	L:360	12	863640	silentblock for TCA	7L0 407 183 A	di:14.3 do:40 (*)
5	63179	track rod	7L8 501 529 A	L:500	13	63762	stabiliser link left	7L0 505 465 D	L:200
6	863717	silentblock for TCA	Part of	di:14.2 do:44.1 (*)	14	63763	stabiliser link right	7L0 505 466 D	L:200
7	863716	silentblock for TCA	Part of	di:12 do:44.4 (*)	15	63664	stabiliser link left	7L0 505 465 B	L:200
8	863715	silentblock for TCA	Part of	di:16 do:44 (*)	16	63665	stabiliser link right	7L0 505 466 B	L:200

Copyright 2021

VOLKSWAGEN
TOUAREG

TOUAREG (7P5, 7P6) 01/2010 - 03/2018

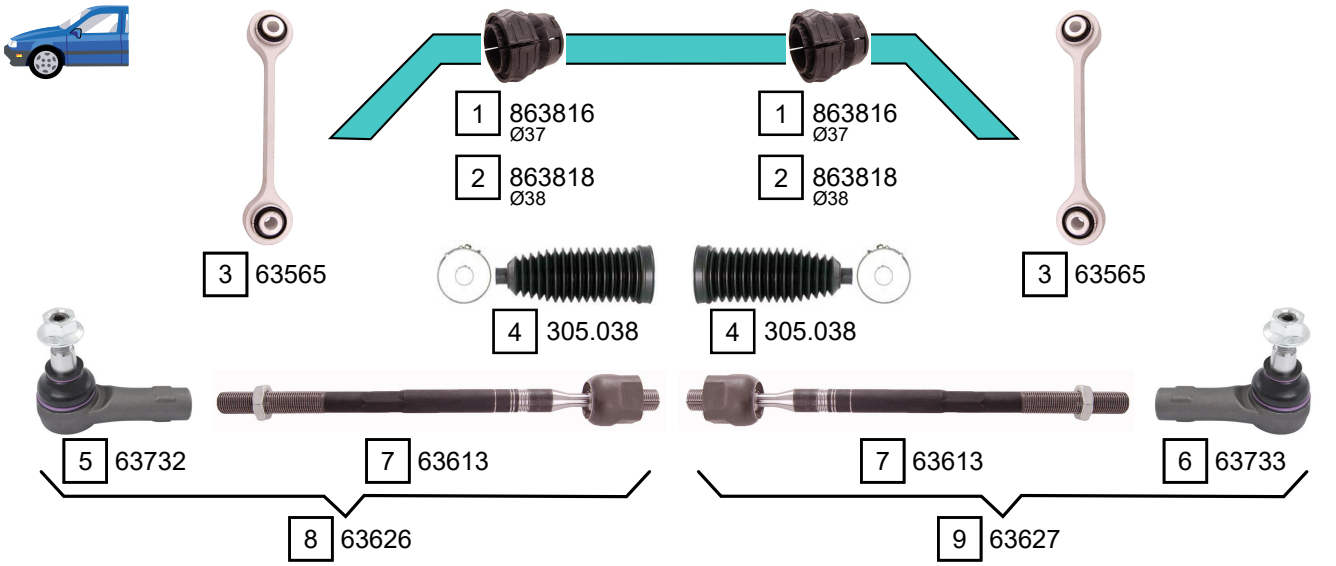

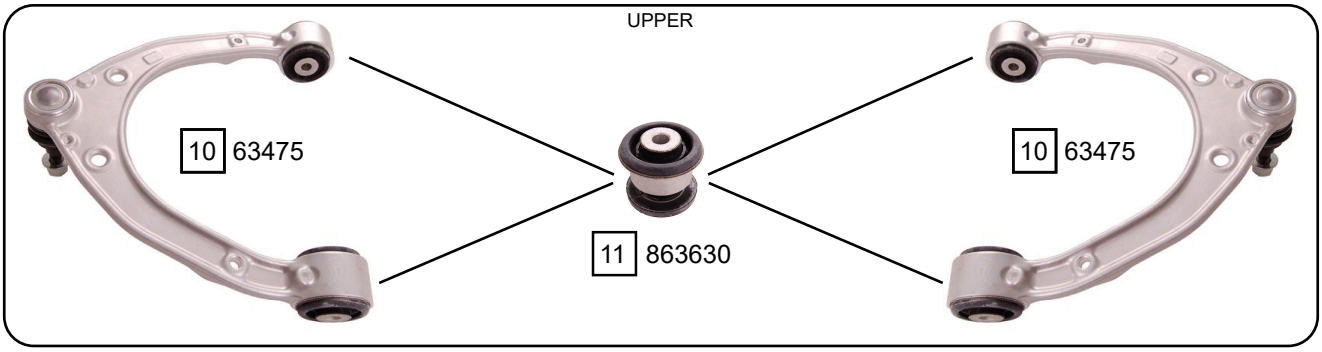

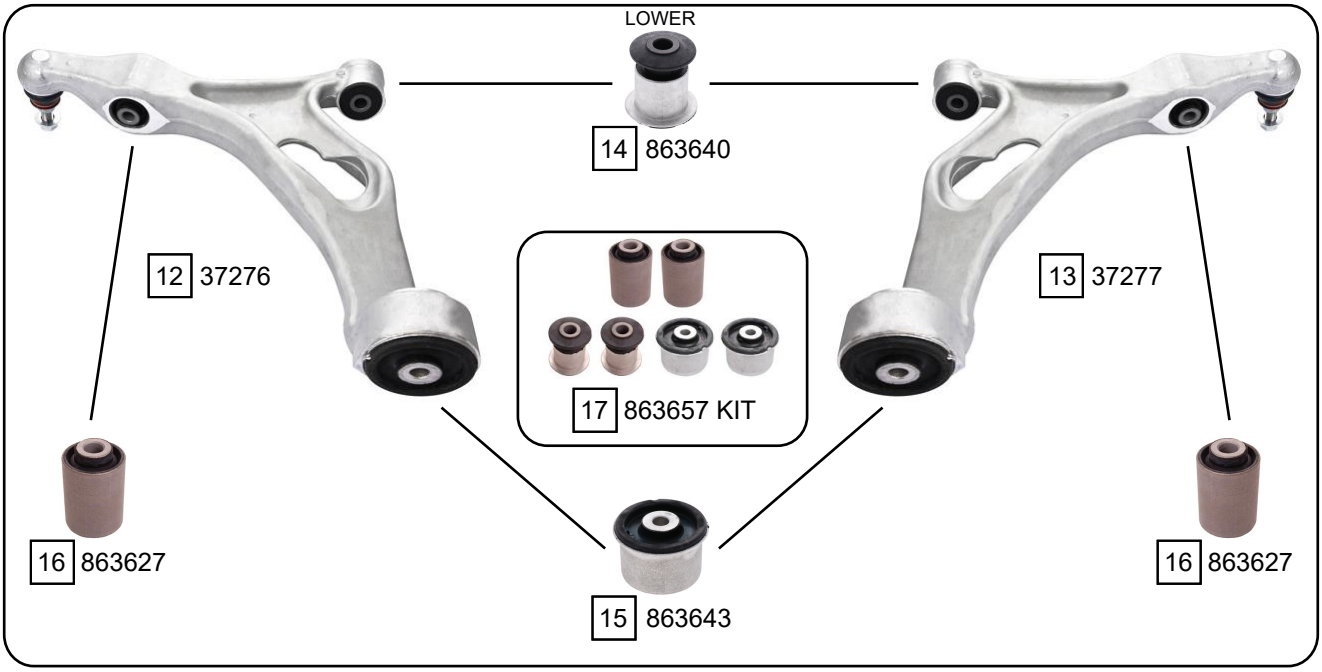

Ref.	Sidem Ref.	Description	OE-number	Measures	Ref.	Sidem Ref.	Description	OE-number	Measures
1	863816	stabiliser mounting	7L0 411 313 J S1	di:36	10	63475	TCA wbj	7P0 407 021	c:16.8
2	863818	stabiliser mounting	7L8 411 313 B S1	di:38	11	863630	silentblock for TCA	7P0 407 077	di:10.1 do:40.3 (*)
3	63565	stabiliser link	7L0 411 317	L:197	12	37276	TCA left wbj	7P0 407 151 E	c:20.9
4	305.038	steering rack gaiter	7L0 422 831 A	D:66 d:16 L:195	13	37277	TCA right wbj	7P0 407 152 E	c:20.9
5	63732	tie rod end	7L0 422 817 D	c:16.5 th:FM16X1.5R	14	863640	silentblock for TCA	7L0 407 183 A	di:14.3 do:40 (*)
6	63733	tie rod end	7L0 422 818 D	c:16.5 th:FM16X1.5R	15	863643	silentblock for TCA	7L0 407 182 G	di:14.3 do:72.2 (*)
7	63613	axial joint	Part of	th:MM16X1.5R L:293	16	863627	silentblock for TCA	7L0 412 333 A	di:14.2 do:48 (*)
8	63626	tie rod	7L0 422 803 D	c:16.5	17	863657 KIT	silentblock kit	7L0 407 182 G S1	
9	63627	tie rod	7L0 422 804 D	c:16.5					

Copyright 2021

VOLKSWAGEN
TOUAREG

TOUAREG (7P5) 01/2010 - 03/2018

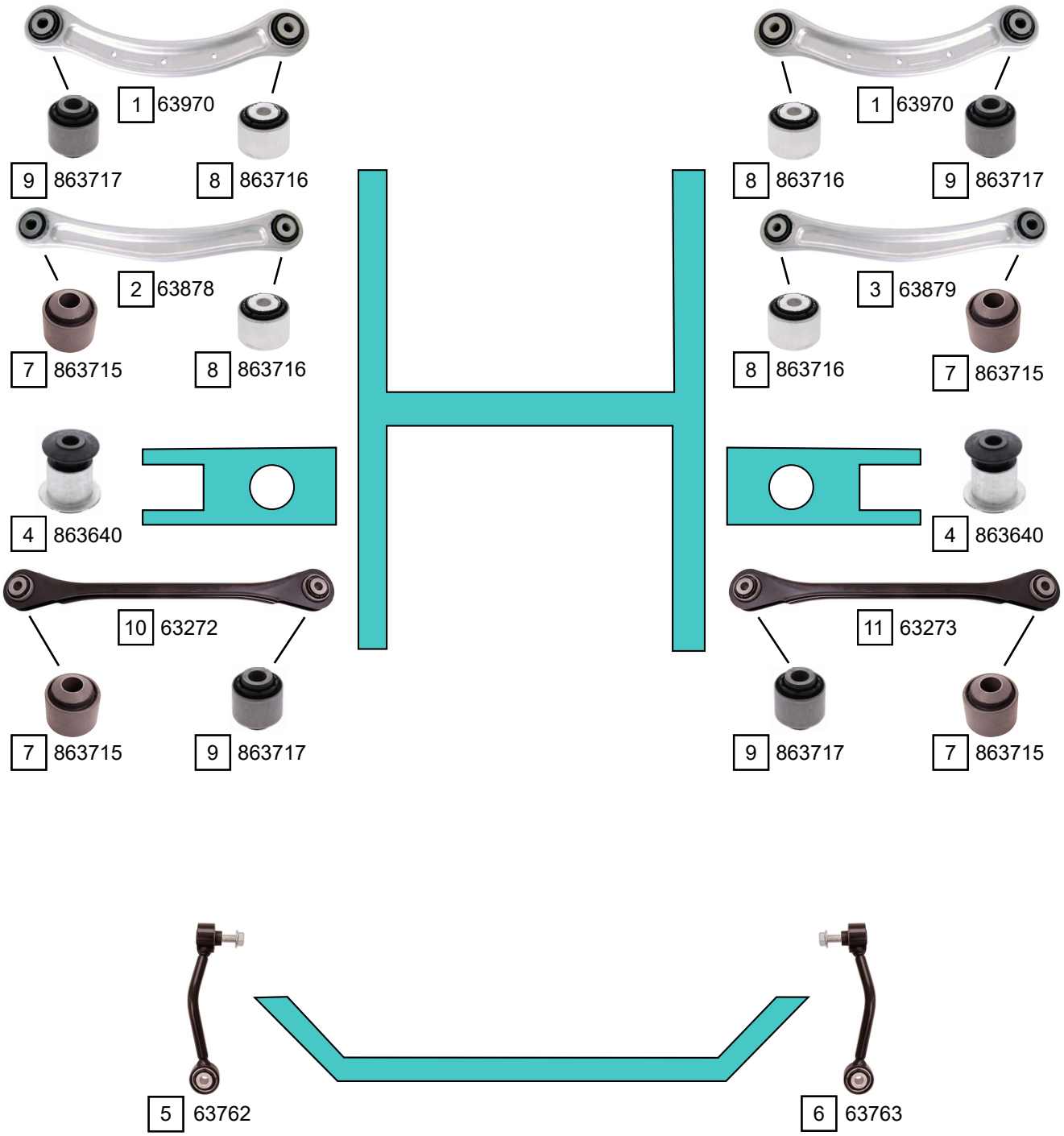

Ref.	Sidem Ref.	Description	OE-number	Measures	Ref.	Sidem Ref.	Description	OE-number	Measures
1	63970	TCA	7L0 505 323 A	L:300	7	863715	silentblock for TCA	Part of	di:16 do:44 (*)
2	63878	TCA left	7L0 505 397	L:360	8	863716	silentblock for TCA	Part of	di:12 do:44.4 (*)
3	63879	TCA right	7L0 505 398	L:360	9	863717	silentblock for TCA	Part of	di:14.2 do:44.1 (*)
4	863640	silentblock for TCA	7L0 407 183 A	di:14.3 do:40 (*)	10	63272	track rod	7P0 501 529	L:500
5	63762	stabiliser link left	7L0 505 465 D	L:200	11	63273	track rod	7P0 501 530	L:500
6	63763	stabiliser link right	7L0 505 466 D	L:200					

Copyright 2021

VOLKSWAGEN
TOURAN

TOURAN (1T1 - 1T2 - 1T3) 02/2003 - 05/2015

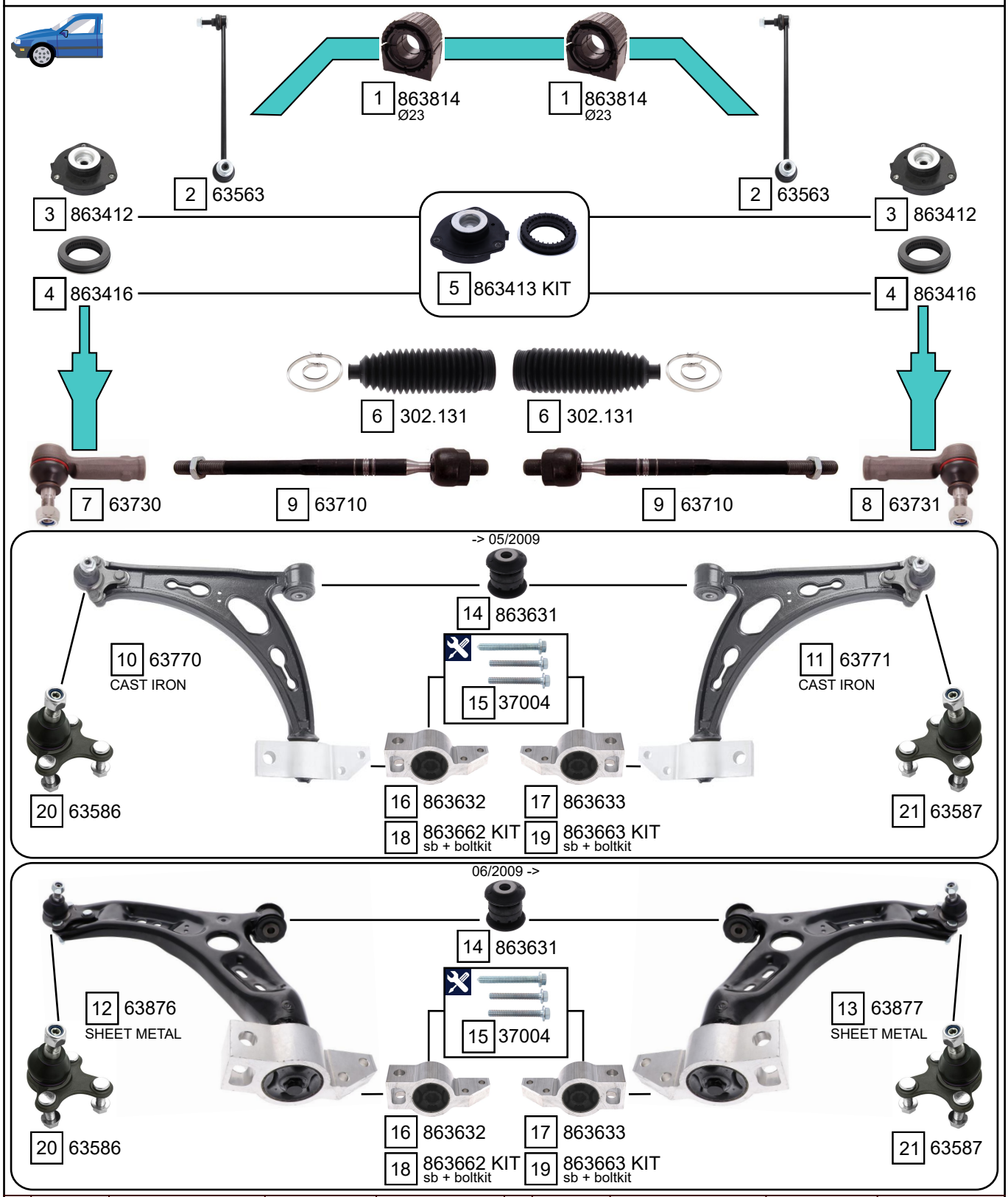

Ref.	Sidem Ref.	description	OE-number	measures	Ref.	Sidem Ref.	description	OE-number	measures
1	863814	stabiliser mounting	Part of	di:21	12	63876	TCA left wbj	1K0 407 151 BC S1	c:15.4
2	63563	stabiliser link	5Q0 411 315 A	L:335	13	63877	TCA right wbj	1K0 407 152 BC S2	c:15.4
3	863412	strut mount	1K0 412 331 B	di:14.2 L:49.5	14	863631	silentblock for TCA	1K0 407 182	di:12.1 do:40 (*)
4	863416	bearing	1K0 412 249 B	di:68.5 do:112 L:25.5	15	37004	mounting kit	N 910 398 02 S1	th:M10x1.5R
5	863413 KIT	strut mount kit	1K0 412 331 B S1	di:14.2 L:50	16	863632	silentblock for TCA	1K0 199 231 J	di:18.8 (*)
6	302.131	steering rack gaiter	1K0 423 831 A	D:50 d:15 L:193	17	863633	silentblock for TCA	1K0 199 232 J	di:18.8 (*)
7	63730	tie rod end left	1K0 423 811 J S1	c:13.2 th:FM16x1.5R	18	863662 KIT	silentblock kit	1K0 199 231 J S1	
8	63731	tie rod end right	1K0 423 812 J S1	c:13.2 th:FM16x1.5R	19	863663 KIT	silentblock kit	1K0 199 232 J S1	
9	63710	axial joint	1K0 423 810 A	th:MM16X1.5R L:312	20	63586	ball joint left	1K0 407 365 C	c:15.4
10	63770	TCA left wbj	1K0 407 151 AC	c:15.4	21	63587	ball joint right	1K0 407 366 C	c:15.4
11	63771	TCA right wbj	1K0 407 152 AC	c:15.4					

Copyright 2021

VOLKSWAGEN
TOURAN

TOURAN (1T1 - 1T2 - 1T3) 02/2003 - 05/2015

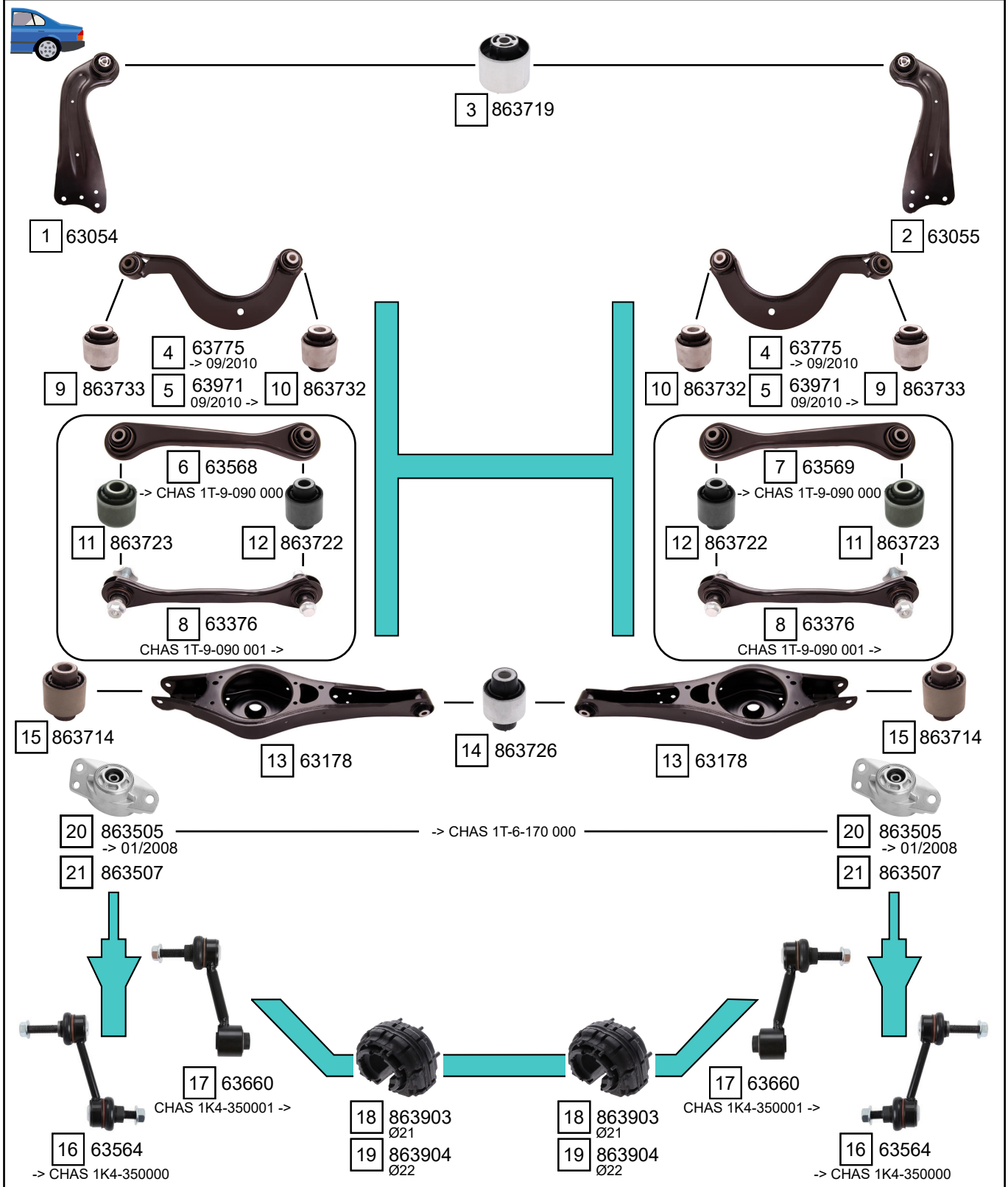

Ref.	Sidem Ref.	description	OE-number	measures	Ref.	Sidem Ref.	description	OE-number	measures
1	63054	TCA left	1T0 505 223 F		12	863722	silentblock for TCA	Part of	di:12.1 do:40.4 (*)
2	63055	TCA right	1T0 505 224 F		13	63178	TCA	1K0 505 311 AB	
3	863719	mounting axle body	3C0 505 541	di:12.2 do:60.2 (*)	14	863726	silentblock for TCA	Part of	di:12.1 do:42 (*)
4	63775	track rod	1K0 505 323 N	L:305.5	15	863714	silentblock for TCA	1K0 505 553 A	di:12.2 do:37.4 (*)
5	63971	track rod	5Q0 505 323 C	L:305	16	63564	stabiliser link rear axle	1K0 505 465 C	L:96
6	63568	track rod	1K0 501 529 F	L:298	17	63660	stabiliser link rear axle	1K0 505 465 K	L:95
7	63569	track rod	1K0 501 530 C	L:298	18	863903	stabiliser mounting	1K0 511 327 AR	di:18.5
8	63376	track rod	1K0 501 529 H	L:298	19	863904	stabiliser mounting	1K0 511 327 AS	di:19.5
9	863733	silentblock for TCA	Part of	di:14.3 do:38.2 (*)	20	863505	strut mount	1K0 513 353 H	di:10.4 L:62
10	863732	silentblock for TCA	Part of	di:12.1 do:38.3 (*)	21	863507	strut mount	3C0 513 353 C	di:10.5 do:68 L:62.7
11	863723	silentblock for TCA	Part of	di:14.2 do:40.1 (*)					

Copyright 2021

VOLKSWAGEN
TOURAN

TOURAN (5T1) 05/2015 ->

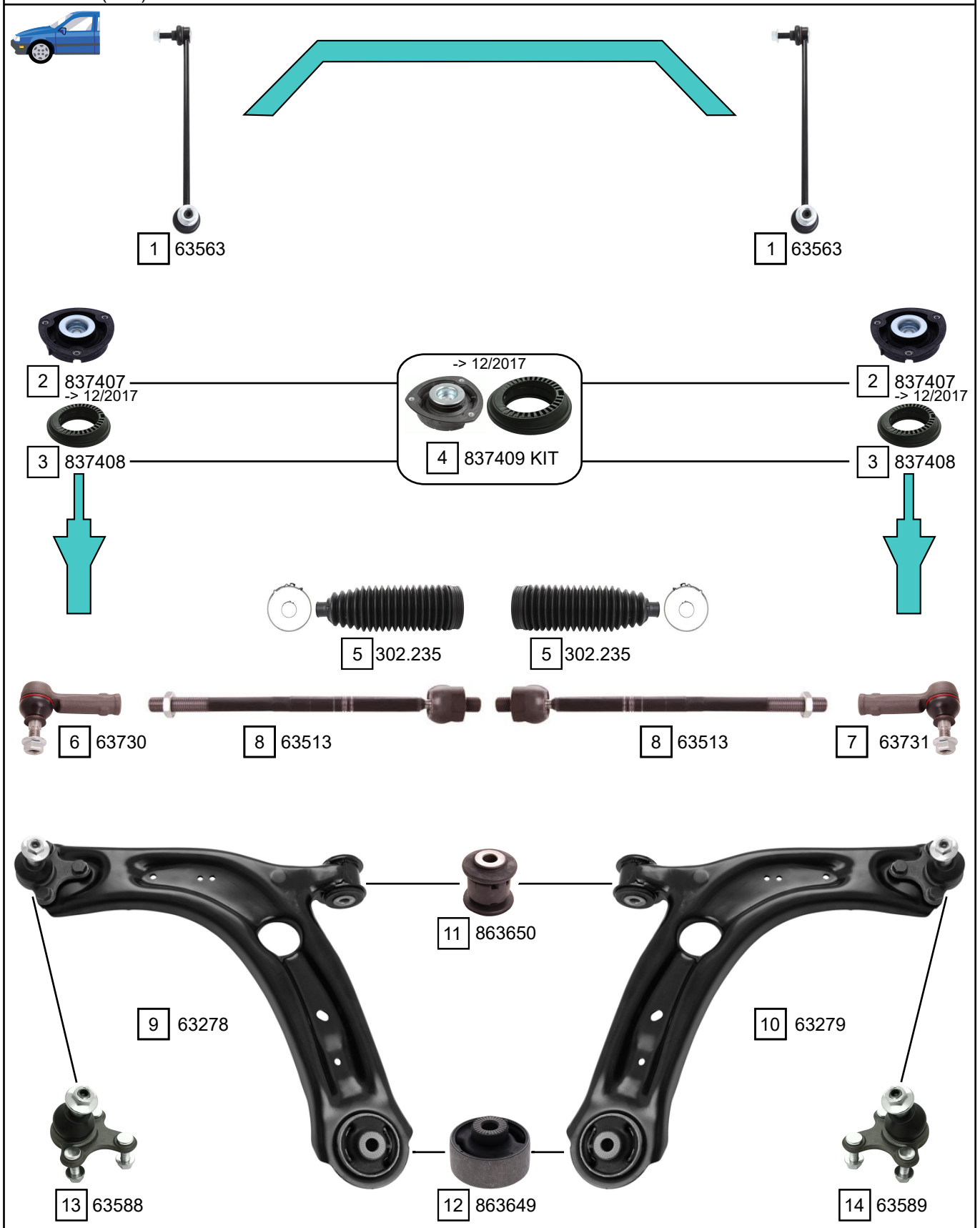

Ref.	Sidem Ref.	Description	OE-number	Measures	Ref.	Sidem Ref.	Description	OE-number	Measures
1	63563	stabiliser link	5Q0 411 315 A	L:335	8	63513	axial joint	561 423 810	th:MM16X1.5R L:330
2	837407	strut mount	5Q0 412 331 E	di:14.6 do:64.1 L:42	9	63278	TCA left wbj	3Q0 407 151 E S1	c:15.2
3	837408	bearing	5Q0 412 249 F	di:74 do:127 L:38.6	10	63279	TCA right wbj	3Q0 407 152 E S1	c:15.2
4	837409 KIT	strut mount kit	5Q0 412 331 E S1	di:14.6 do:127	11	863650	silentblock for TCA	5Q0 407 182	di:12.1 do:40.1 (*)
5	302.235	steering rack gaiter	5Q0 423 831	D:53.5 d:15.5 L:191	12	863649	silentblock for TCA	5Q0 407 183 E	di:12.9 do:65 (*)
6	63730	tie rod end left	1K0 423 811 J S1	c:13.2 th:FM16x1.5R	13	63588	ball joint left	3C0 407 365 B	c:15.2
7	63731	tie rod end right	1K0 423 812 J S1	c:13.2 th:FM16x1.5R	14	63589	ball joint right	3C0 407 366 B	c:15.2

Copyright 2021

VOLKSWAGEN
TOURAN

TOURAN (5T1) 05/2015 ->

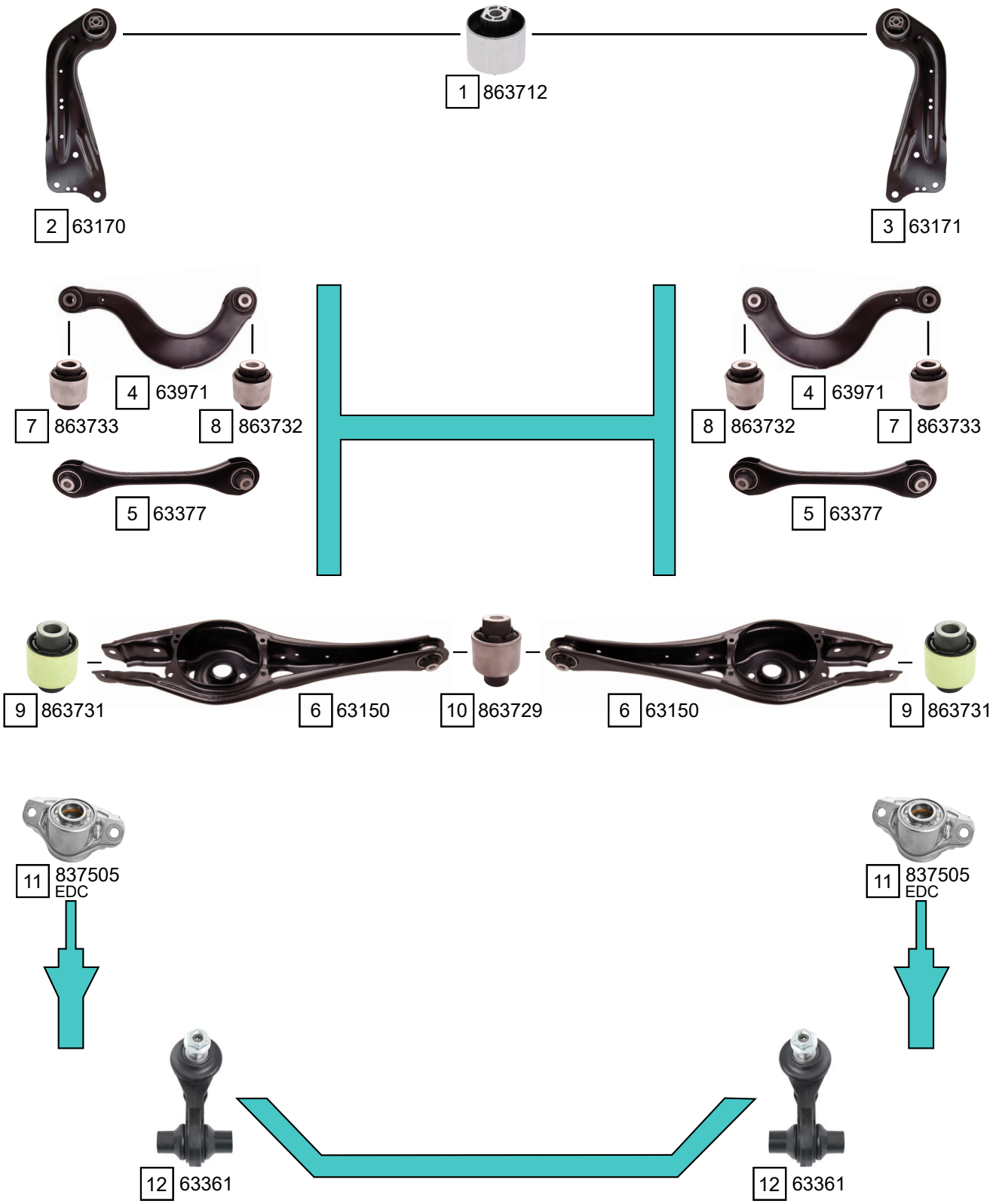

Ref.	Sidem Ref.	Description	OE-number	Measures	Ref.	Sidem Ref.	Description	OE-number	Measures
1	863712	silentblock for TCA	1K0 505 541 B	di:12.2 do:60.2 (*)	7	863733	silentblock for TCA	Part of	di:14.3 do:38.2 (*)
2	63170	TCA left	5Q0 505 223 D	L:384	8	863732	silentblock for TCA	Part of	di:12.1 do:38.3 (*)
3	63171	TCA right	5Q0 505 224 D	L:384	9	863731	silentblock for TCA	5Q0 505 553	di:12.1 do:37.4 (*)
4	63971	track rod	5Q0 505 323 C	L:305	10	863729	silentblock for TCA	Part of	di:12.1 do:44.3 (*)
5	63377	track rod	5Q0 501 529 F	L:282	11	837505	strut mount	5Q0 513 353 G	di:10.2 do:65.8 L:63.3
6	63150	TCA	5QA 505 311 E		12	63361	stabiliser link rear axle	5Q0 505 465 C	L:70

Copyright 2021

VOLKSWAGEN
TRANSPORTER

TRANSPORTER II 07/1968 - 09/1979

2 63034

3 63035

1 64080

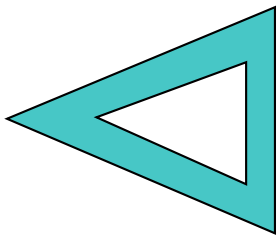

UPPER

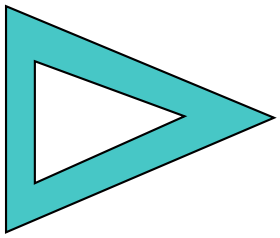

1 64080

4 R10117

4 R10117

1 64080

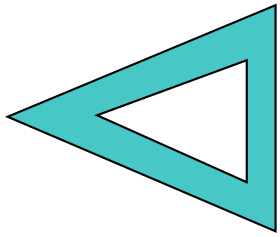

LOWER

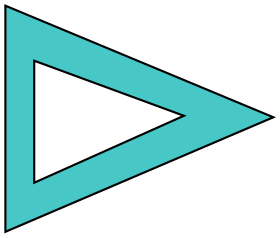

1 64080

4 R10117

4 R10117

Ref.	Sidem Ref.	Description	OE-number	Measures	Ref.	Sidem Ref.	Description	OE-number	Measures
1	64080	ball joint	211 405 371 B	c:20 do:48.2	3	63035	tie rod end left	311 415 811 B	c:12.7 th:MM14X1.5L
2	63034	tie rod end right	311 415 812 B	c:12.7 th:MM14X1.5R	4	R10117	mounting tool ring long ø64	SEE PAGE III	di:56 do:64

Copyright 2021

VOLKSWAGEN
TRANSPORTER

TRANSPORTER III 05/1979 - 08/1992

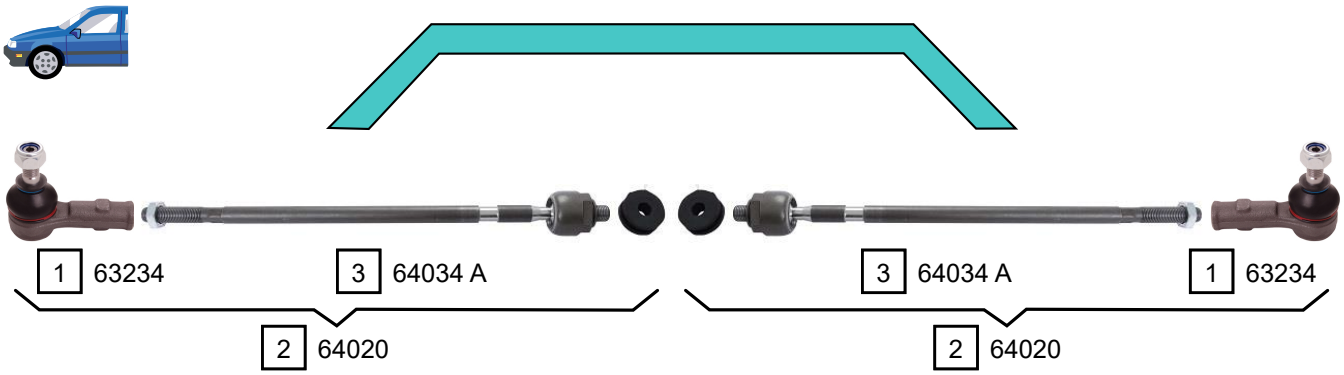

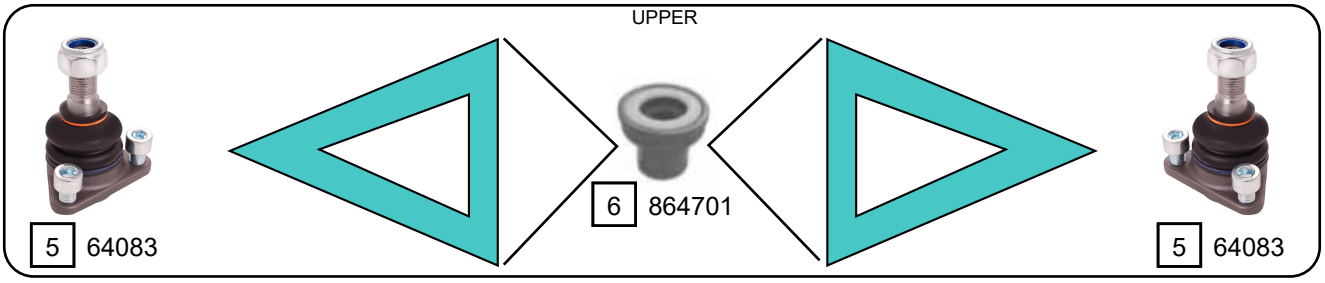

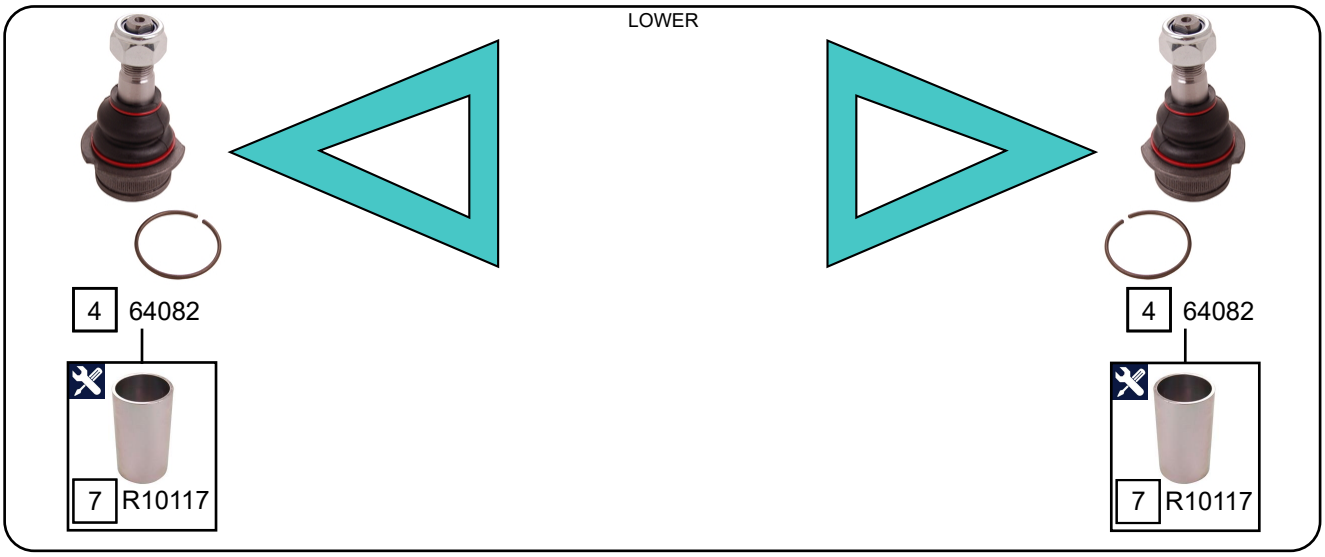

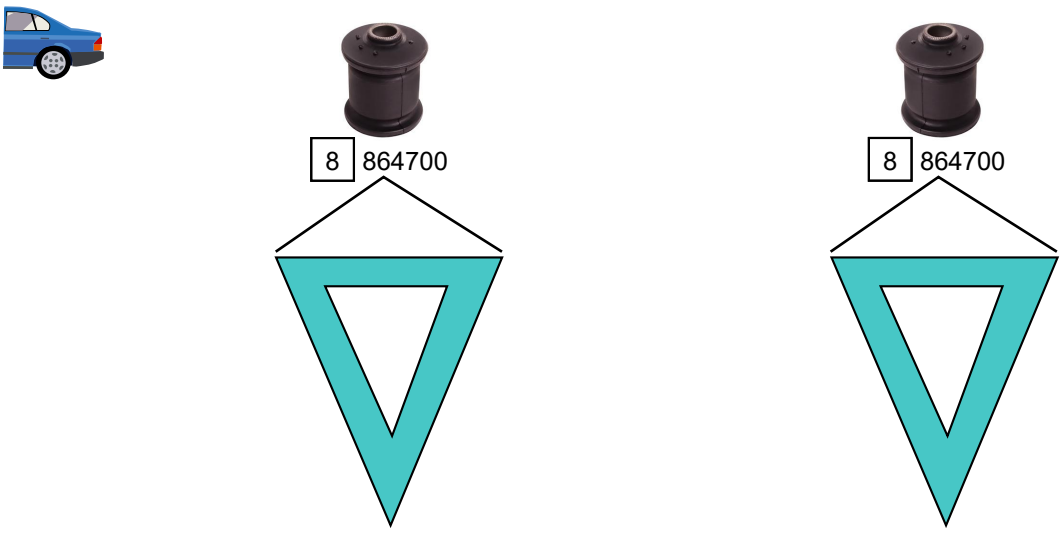

Ref.	Sidem Ref.	Description	OE-number	Measures	Ref.	Sidem Ref.	Description	OE-number	Measures
1	63234	tie rod end	171 419 812	c:12.6 th:FM14x1.5R	5	64083	ball joint upper	251 407 361	c:18.1
2	64020	tie rod	251 419 803 A	c:12.6	6	864701	silentblock for TCA	251 407 077 B	di:18.5 do:57.5 (*)
3	64034 A	axial joint	Part of	th:MM14X1.5R L:385	7	R10117	mounting tool ring long ø64	SEE PAGE III	di:56 do:64
4	64082	ball joint lower	251 407 187	c:19.7 do:48.4	8	864700	silentblock for TCA	251 501 131 A	di:12.2 do:47.4 (*)

Copyright 2021

VOLKSWAGEN
TRANSPORTER

TRANSPORTER IV
-> CHAS 70-S-002-791

09/1990 - 08/1994

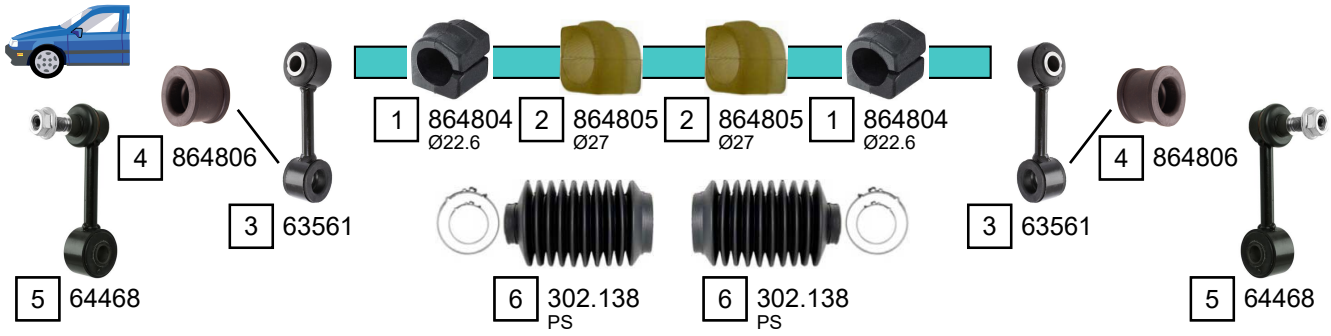

MS LHD

-> CHAS 70-M096448

7 64230 | 11 64230 A | 12 64231 A | 8 64231

CHAS 70-M096449 - CHAS 70-S-002791

9 64232 | 11 64230 A | 12 64231 A | 10 64233

MS RHD

-> CHAS 70-M096448

7 64230 | 12 64231 A | 11 64230 A | 8 64231

CHAS 70-M096449 - CHAS 70-S-002791

9 64232 | 12 64231 A | 11 64230 A | 10 64233

Ref.	Sidem Ref.	Description	OE-number	Measures	Ref.	Sidem Ref.	Description	OE-number	Measures
1	864804	stabiliser mounting	7D1 411 041	di:22	7	64230	tie rod end left	701 419 811 A	c:12.7 th:FM16X1.5R
2	864805	stabiliser mounting	701 411 041 D	di:27	8	64231	tie rod end right	701 419 812	c:12.7 th:FM16X1.5R
3	63561	stabiliser link	7D0 411 049	L:108	9	64232	tie rod end left	701 419 811 B	c:14.7 th:FM16X1.5R
4	864806	stabiliser mounting	7D0 411 045	di:19	10	64233	tie rod end right	701 419 812 A	c:14.7 th:FM16X1.5R
5	64468	stabiliser link	701 411 049 B	L:109	11	64230 A	axial joint	701 419 810	th:MM14X1.5R L:391
6	302.138	steering rack gaiter	7D0 419 831	D:46 d:25 L:120	12	64231 A	axial joint	701 419 810 B	th:MM14X1.5R L:292

Copyright 2021

TRANSPORTER IV
-> CHAS 70-S-002-791

09/1990 - 08/1994

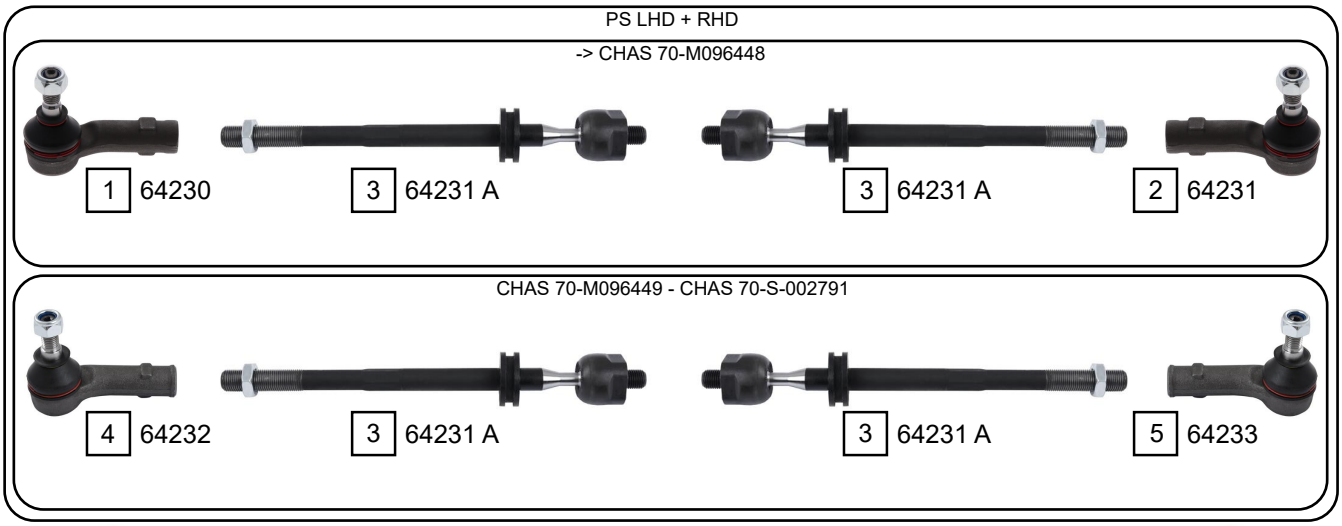

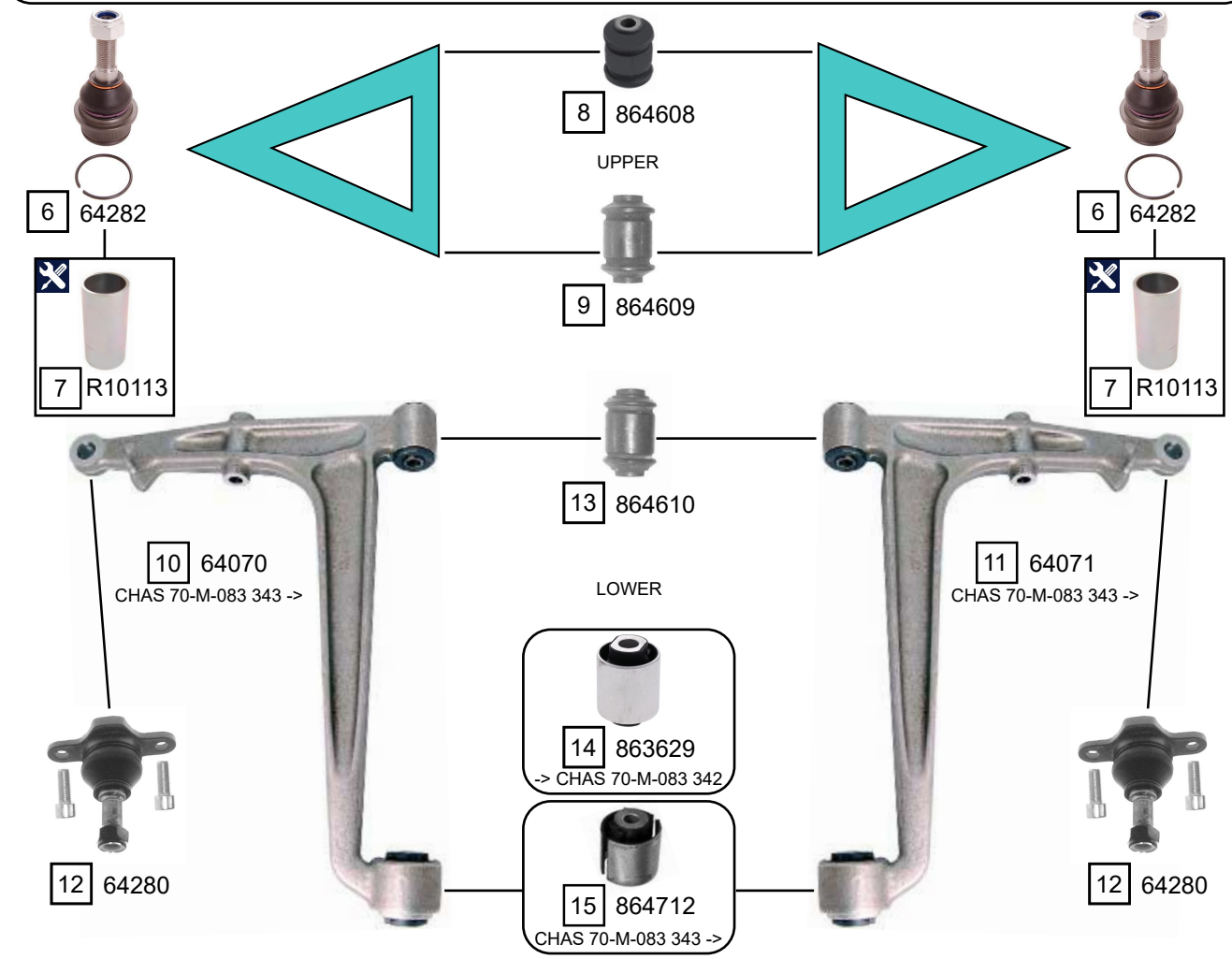

Ref.	Sidem Ref.	Description	OE-number	Measures	Ref.	Sidem Ref.	Description	OE-number	Measures
1	64230	tie rod end left	701 419 811 A	c:12.7 th:FM16X1.5R	9	864609	silentblock for TCA	701 407 087	di:12 do:35 (*)
2	64231	tie rod end right	701 419 812	c:12.7 th:FM16X1.5R	10	64070	TCA left wobj	701 407 151 A	c:19.9
3	64231 A	axial joint	701 419 810 B	th:MM14X1.5R L:292	11	64071	TCA right wobj	701 407 152 A	c:19.9
4	64232	tie rod end left	701 419 811 B	c:14.7 th:FM16X1.5R	12	64280	ball joint lower	701 407 361 B	c:20.3
5	64233	tie rod end right	701 419 812 A	c:14.7 th:FM16X1.5R	13	864610	silentblock for TCA	701 407 183	di:14.1 do:35 (*)
6	64282	ball joint upper	701 407 187 B	c:17.9 do:45.5	14	863629	silentblock for TCA	7D0 407 140 A	di:14.3 do:45.5 (*)
7	R10113	mounting tool ring long ø56	SEE PAGE III	di:48 do:56	15	864712	silentblock for TCA	701 407 140 A	di:12.3 do:49.5
8	864608	silentblock for TCA	701 407 077 A	di:12.2 do:38 (*)					

Copyright 2021

VOLKSWAGEN
TRANSPORTER

TRANSPORTER IV
-> CHAS 70-S-002-791

09/1990 - 08/1994

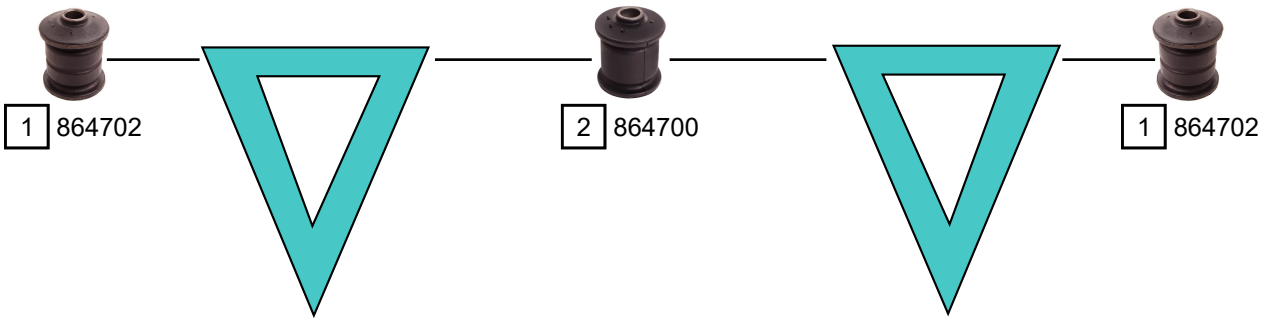

Ref.	Sidem Ref.	Description	OE-number	Measures	Ref.	Sidem Ref.	Description	OE-number	Measures
1	864702	silentblock for TCA	701 501 131	di:14.1 do:47.5 (*)	2	864700	silentblock for TCA	251 501 131 A	di:12.2 do:47.4 (*)

Copyright 2021

VOLKSWAGEN
TRANSPORTER

TRANSPORTER IV
CHAS 70-S-002-792 - 70-T-199-999

09/1994 - 12/1995

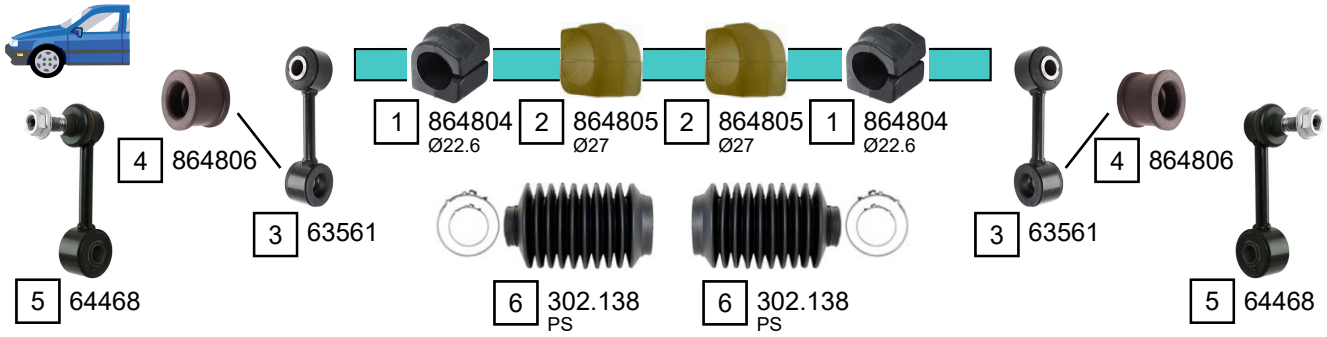

MS

LHD

RHD

PS

LHD + RHD

Ref.	Sidem Ref.	Description	OE-number	Measures	Ref.	Sidem Ref.	Description	OE-number	Measures
1	864804	stabiliser mounting	7D1 411 041	di:22	6	302.138	steering rack gaiter	7D0 419 831	D:46 d:25 L:120
2	864805	stabiliser mounting	701 411 041 D	di:27	7	64234	tie rod end left	701 419 811 C	c:14.7 th:FM16X1.5R
3	63561	stabiliser link	7D0 411 049	L:108	8	64235	tie rod end right	701 419 812 B	c:14.7 th:FM16X1.5R
4	864806	stabiliser mounting	7D0 411 045	di:19	9	64230 A	axial joint	701 419 810	th:MM14X1.5R L:391
5	64468	stabiliser link	701 411 049 B	L:109	10	64231 A	axial joint	701 419 810 B	th:MM14X1.5R L:292

Copyright 2021

VOLKSWAGEN
TRANSPORTER

TRANSPORTER IV
CHAS 70-S-002-792 - 70-T-199-999

09/1994 - 12/1995

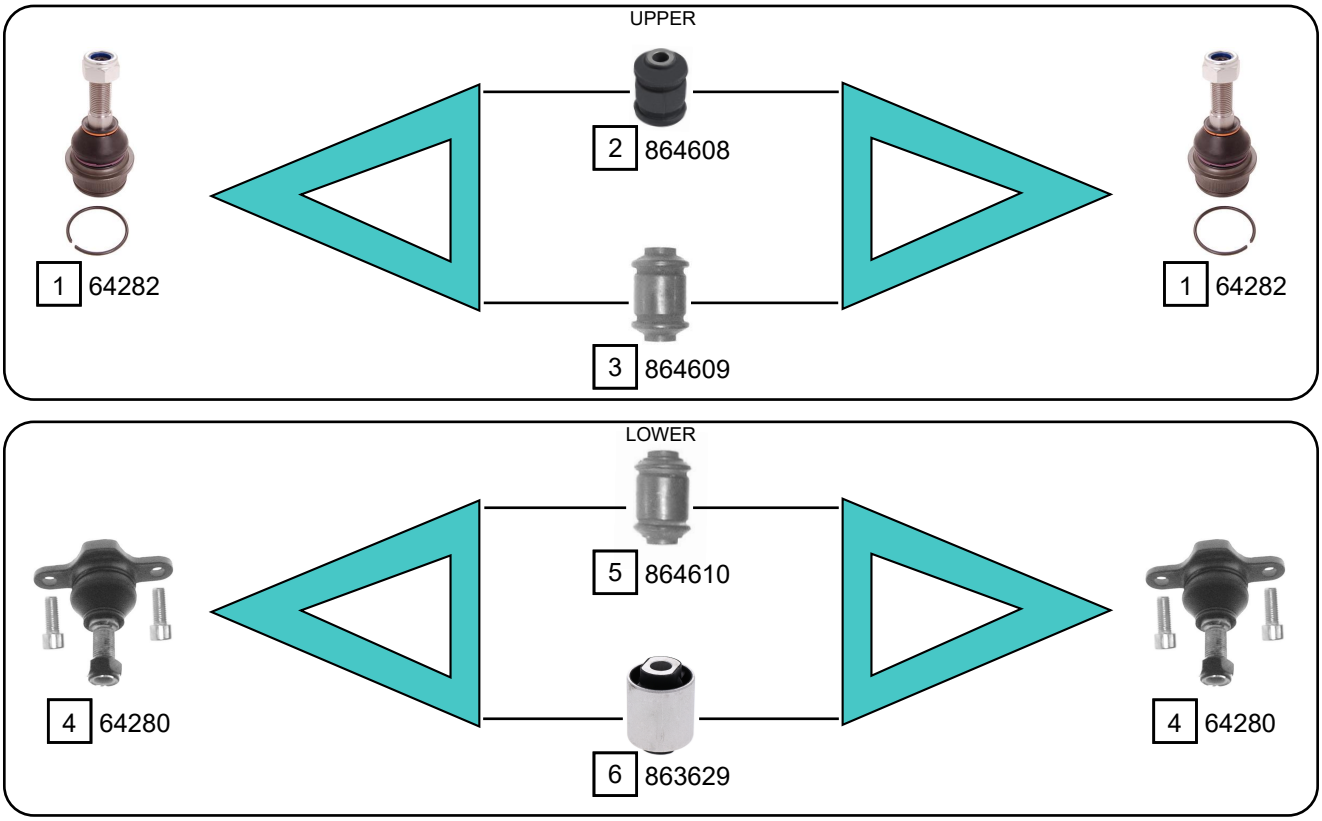

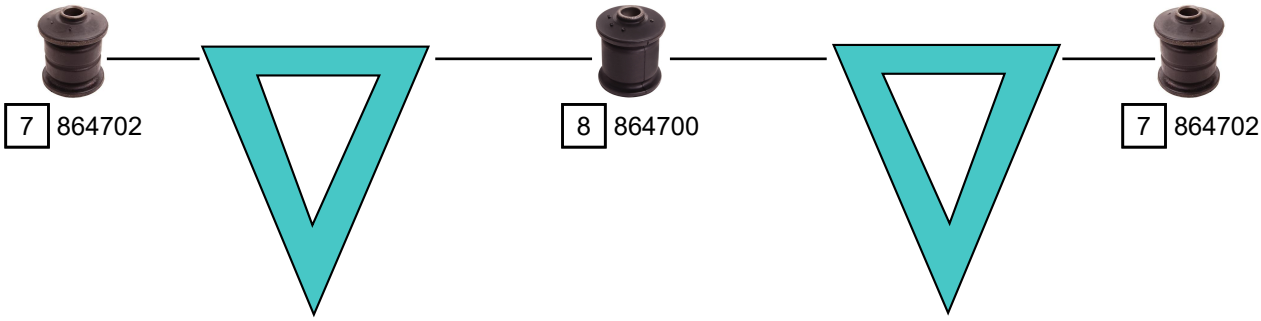

Ref.	Sidem Ref.	Description	OE-number	Measures	Ref.	Sidem Ref.	Description	OE-number	Measures
1	64282	ball joint upper	701 407 187 B	c:17.9 do:45.5	5	864610	silentblock for TCA	701 407 183	di:14.1 do:35 (*)
2	864608	silentblock for TCA	701 407 077 A	di:12.2 do:38 (*)	6	863629	silentblock for TCA	7D0 407 140 A	di:14.3 do:45.5 (*)
3	864609	silentblock for TCA	701 407 087	di:12 do:35 (*)	7	864702	silentblock for TCA	701 501 131	di:14.1 do:47.5 (*)
4	64280	ball joint lower	701 407 361 B	c:20.3	8	864700	silentblock for TCA	251 501 131 A	di:12.2 do:47.4 (*)

Copyright 2021

TRANSPORTER IV
CHAS 70-T-200-000 ->

01/1996 - 04/2003

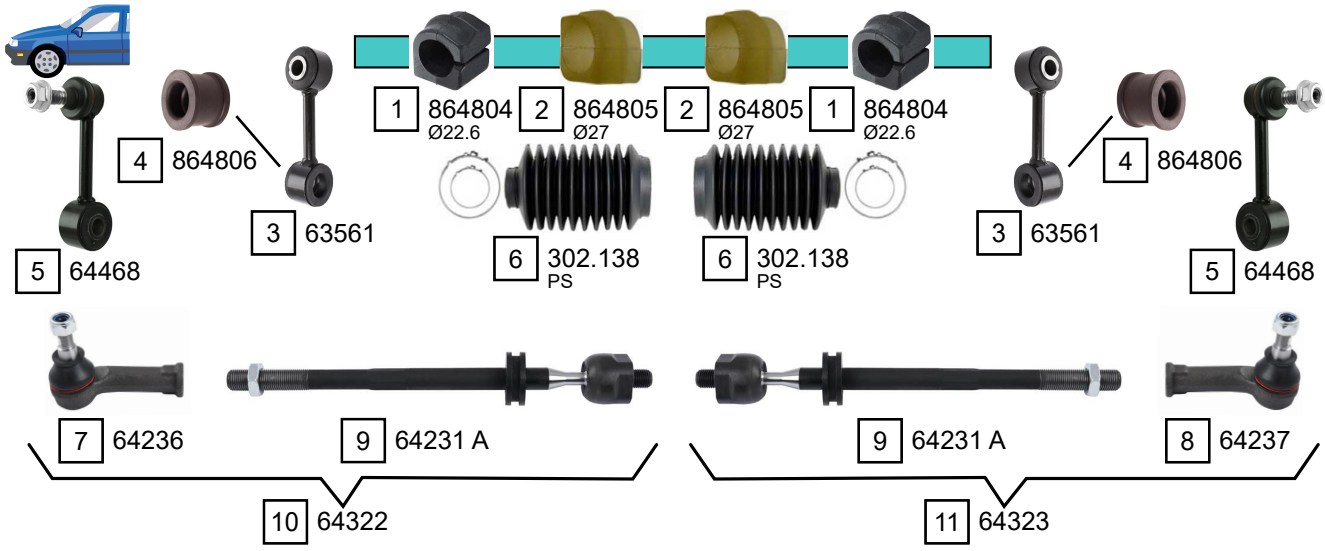

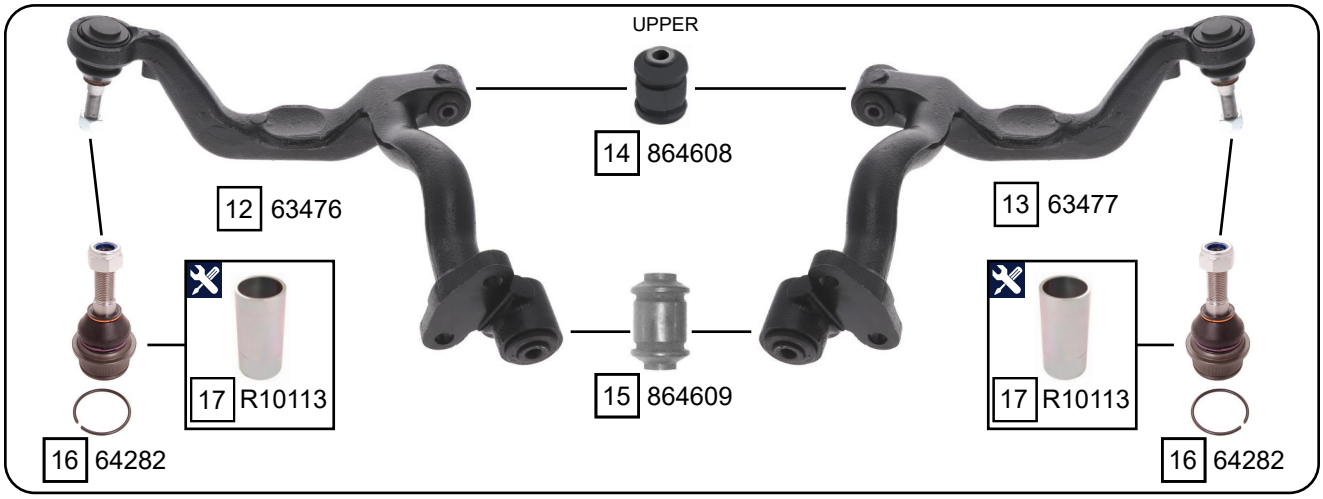

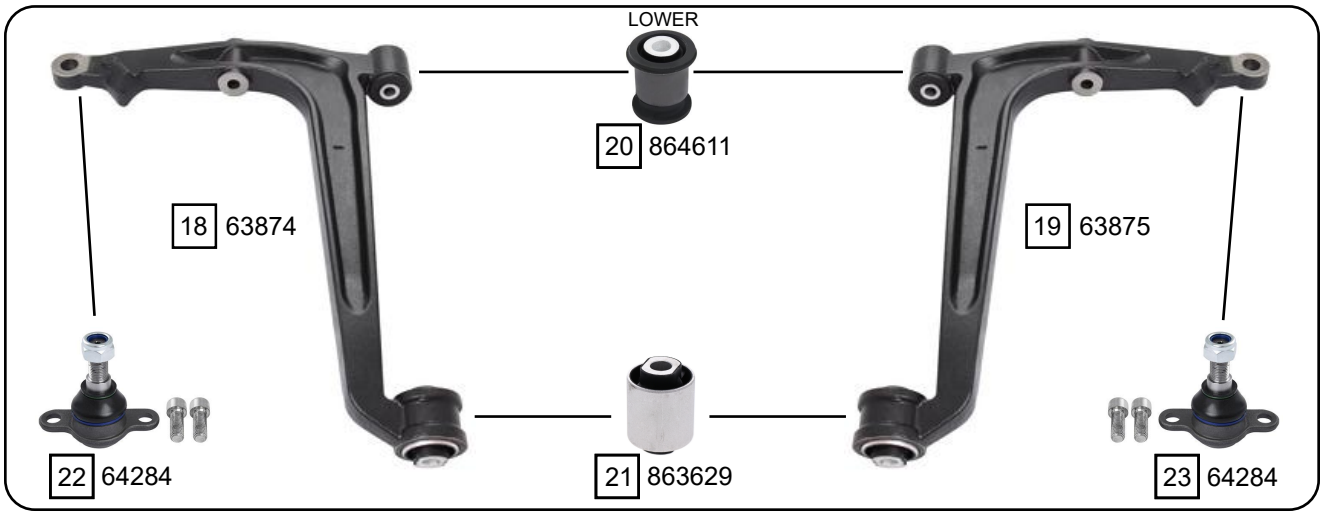

Ref.	Sidem Ref.	description	OE-number	measures	Ref.	Sidem Ref.	description	OE-number	measures
1	864804	stabiliser mounting	7D1 411 041	di:22	12	63476	TCA left wbj	701 407 021 C	c:17.9
2	864805	stabiliser mounting	701 411 041 D	di:27	13	63477	TCA right wbj	701 407 022 C	c:17.9
3	63561	stabiliser link	7D0 411 049	L:108	14	864608	silentblock for TCA	701 407 077 A	di:12.2 do:38 (*)
4	864806	stabiliser mounting	7D0 411 045	di:19	15	864609	silentblock for TCA	701 407 087	di:12 do:35 (*)
5	64468	stabiliser link	701 411 049 B	L:109	16	64282	ball joint upper	701 407 187 B	c:17.9 do:45.5
6	302.138	steering rack gaiter	7D0 419 831	D:46 d:25 L:120	17	R10113	mounting tool ring long ø56	SEE PAGE III	di:48 do:56
7	64236	tie rod end left	701 419 811 E	c:14.8 th:FM16x1.5R	18	63874	TCA left wobj	7D0 407 151 A	c:19.9
8	64237	tie rod end right	701 419 812 D	c:14.8 th:FM16X1.5R	19	63875	TCA right wobj	7D0 407 152 A	c:19.9
9	64231 A	axial joint	701 419 810 B	th:MM14X1.5R L:292	20	864611	silentblock for TCA	7D0 407 183	di:14.1 do:40.1 (*)
10	64322	tie rod left	702 419 803 D	c:14.8	21	863629	silentblock for TCA	7D0 407 140 A	di:14.3 do:45.5 (*)
11	64323	tie rod right	701 419 804 F	c:14.8	22	64284	ball joint lower	7D0 407 361	c:20.5

Copyright 2021

VOLKSWAGEN
TRANSPORTER

TRANSPORTER IV
CHAS 70-T-200-000 ->

01/1996 - 04/2003

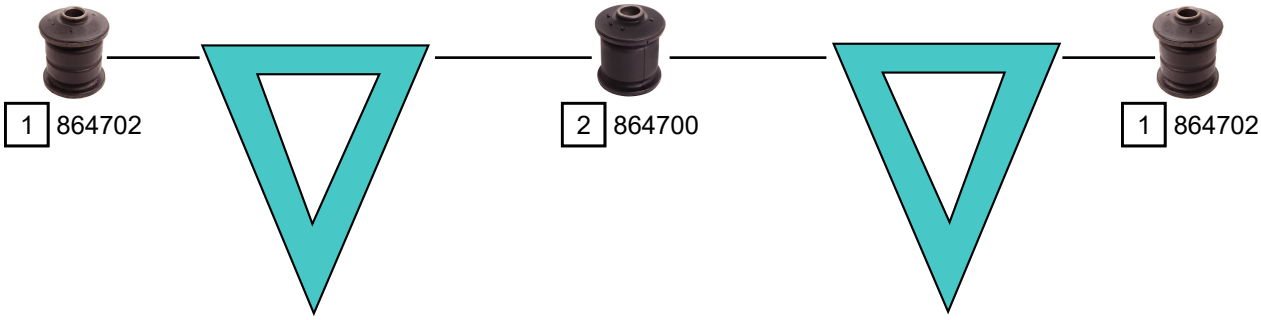

Ref.	Sidem Ref.	Description	OE-number	Measures	Ref.	Sidem Ref.	Description	OE-number	Measures
1	864702	silentblock for TCA	701 501 131	di:14.1 do:47.5 (*)	2	864700	silentblock for TCA	251 501 131 A	di:12.2 do:47.4 (*)

Copyright 2021

TRANSPORTER V (7H_,7J_,7E_,7F_) 04/2003 - 08/2015

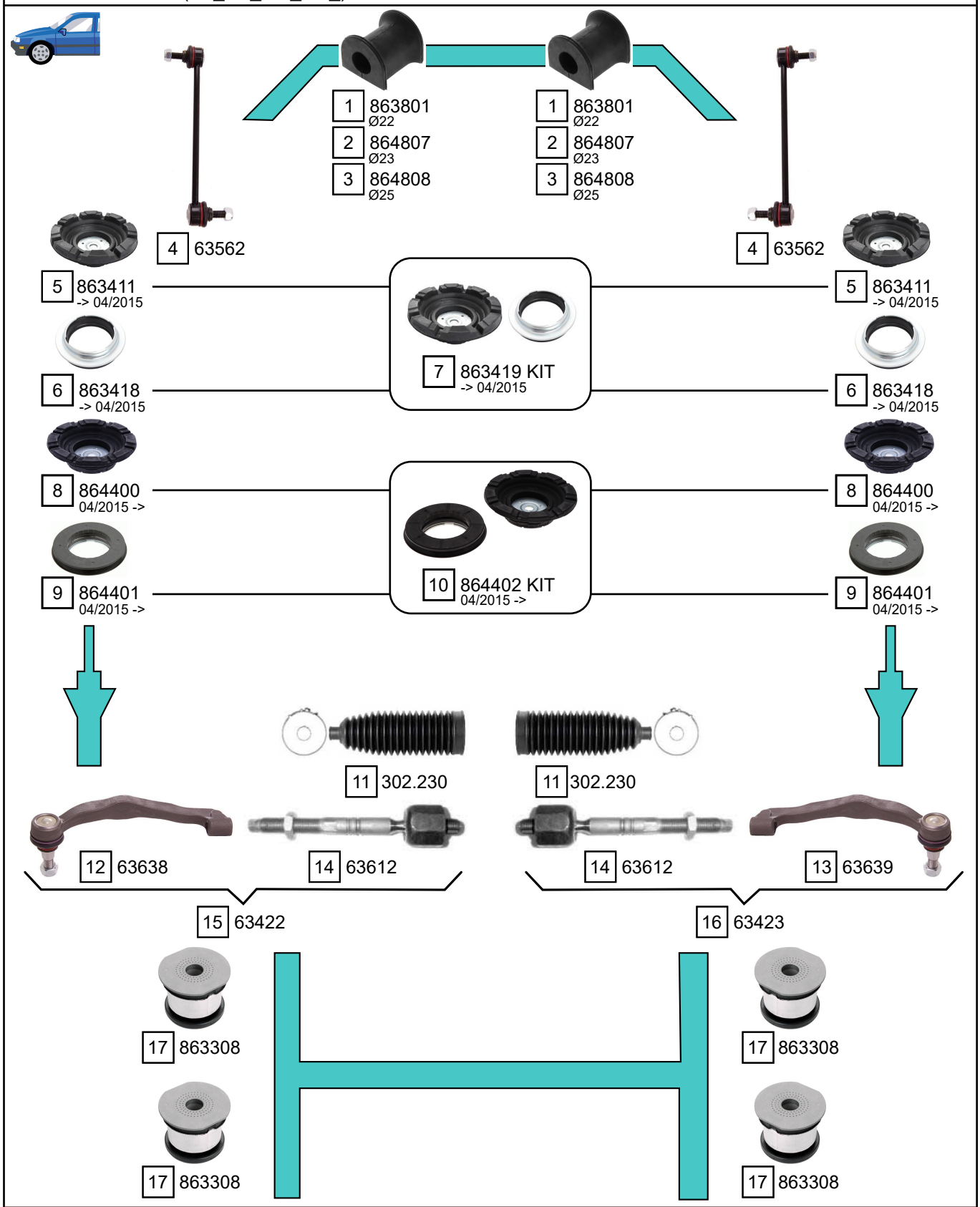

Ref.	Sidem Ref.	Description	OE-number	Measures	Ref.	Sidem Ref.	Description	OE-number	Measures
1	863801	stabiliser mounting	7H0 411 313	di:21	10	864402 KIT	strut mount kit	7E0 412 331 A S1	di:14.5 do:154
2	864807	stabiliser mounting	7H5 411 313 A	di:22	11	302.230	steering rack gaiter	7H0 422 831	D:62 d:16 L:205
3	864808	stabiliser mounting	7H5 411 313 B	di:23.5	12	63638	tie rod end left	7H0 422 817 D	c:16.7 th:FM16x1.5R
4	63562	stabiliser link	7H5 411 317 E	L:260	13	63639	tie rod end right	7H0 422 818 D	c:16.7 th:FM16x1.5R
5	863411	strut mount	7E0 412 331	di:14.4 do:152.5 L:48.6	14	63612	axial joint	Part of	th:MM16x1.5R L:180
6	863418	bearing	7E0 412 249	di:73.7 do:112 L:27.1	15	63422	tie rod left	7H0 419 803 D	c:16.7
7	863419 KIT	strut mount kit	7E0 412 331 S1	di:14.5 do:153	16	63423	tie rod right	7H0 419 804 D	c:16.7
8	864400	strut mount	7E0 412 331 A	di:14.5 do:153 L:44	17	863308	mounting axle body	7H0 499 035 D	di:22.2 do:70.5
9	864401	bearing	7E0 412 249 B	di:73.5 do:127 L:29.2					

Copyright 2021

VOLKSWAGEN
TRANSPORTER

TRANSPORTER V (7H_,7J_,7E_,7F_) 04/2003 - 08/2015

MAX WEIGHT 2.6T - 3.0T

-> 09/2011

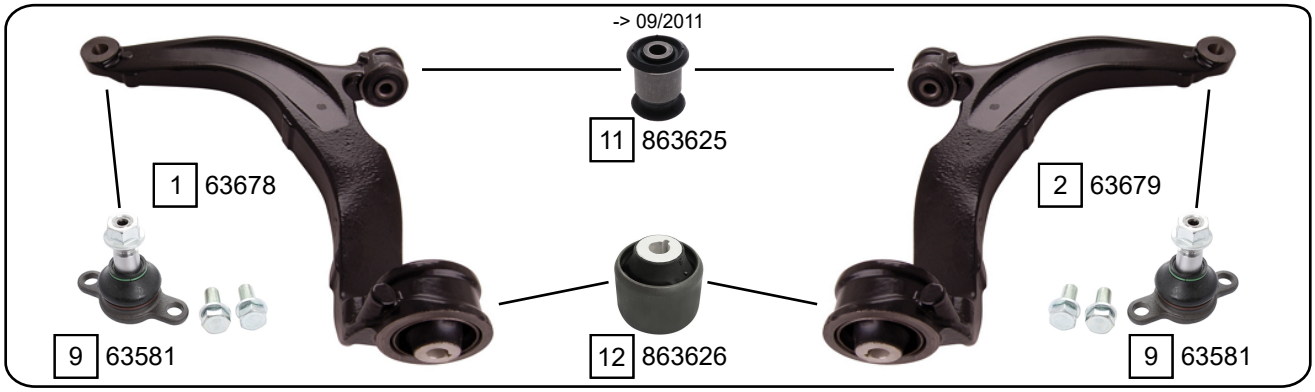

09/2011 ->

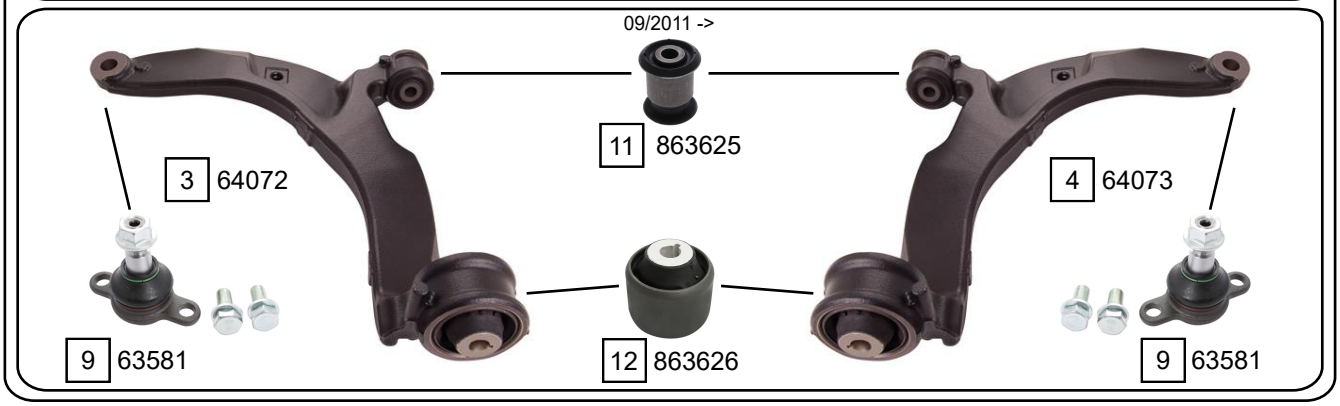

MAX WEIGHT 3.2T

-> 09/2011

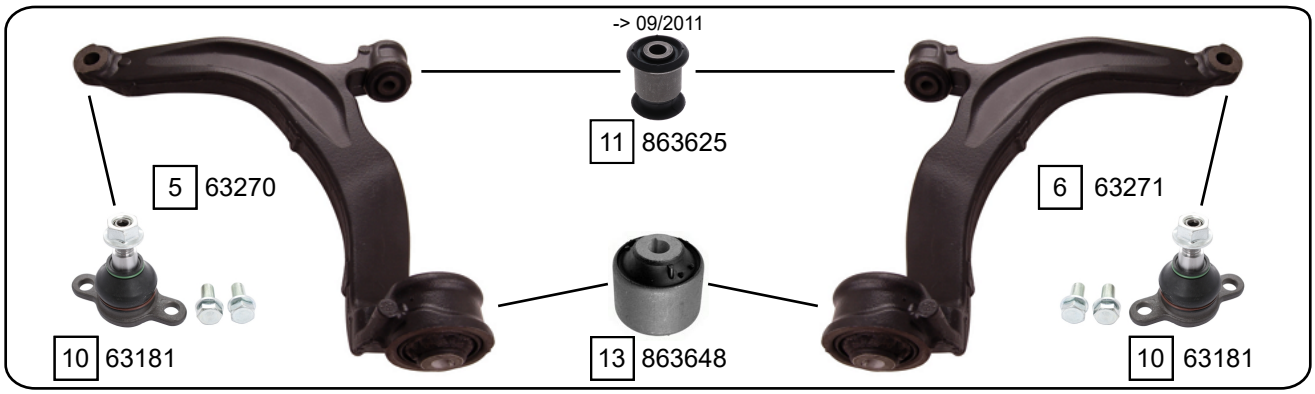

09/2011 ->

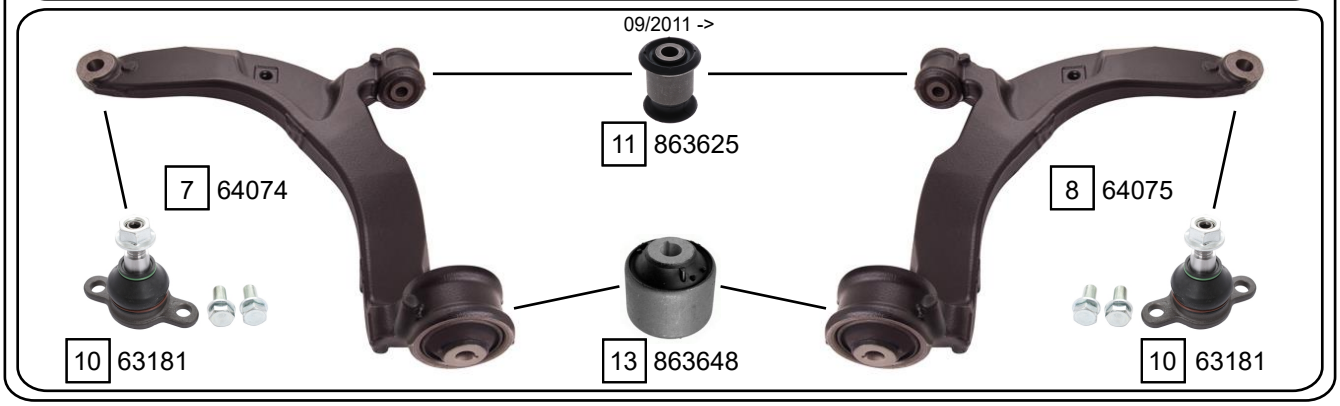

Ref.	Sidem Ref.	Description	OE-number	Measures	Ref.	Sidem Ref.	Description	OE-number	Measures
1	63678	TCA left wobj	7H0 407 151 F	c:21.5	8	64075	TCA right wobj	7E8 407 152 A	c:21.5
2	63679	TCA right wobj	7H0 407 152 F	c:21.5	9	63581	ball joint	7E0 407 361 A	c:18.2
3	64072	TCA left wobj	7E0 407 151 C	c:21.5	10	63181	ball joint	7H8 407 361 A	c:18.2
4	64073	TCA right wobj	7E0 407 152 B	c:21.5	11	863625	silentblock for TCA	7H0 407 183	di:14.2 do:40.3 (*)
5	63270	TCA left wobj	7H8 407 151 B	c:21.5	12	863626	silentblock for TCA	7H0 407 182 A	di:14.1 do:60.2 (*)
6	63271	TCA right wobj	7H8 407 152 B	c:21.5	13	863648	silentblock for TCA	7H0 407 182	di:14.2 do:60.1 (*)
7	64074	TCA left wobj	7E8 407 151 B	c:21.5					

Copyright 2021

VOLKSWAGEN
TRANSPORTER

TRANSPORTER V (7H_,7J_,7E_,7F_) 04/2003 - 08/2015

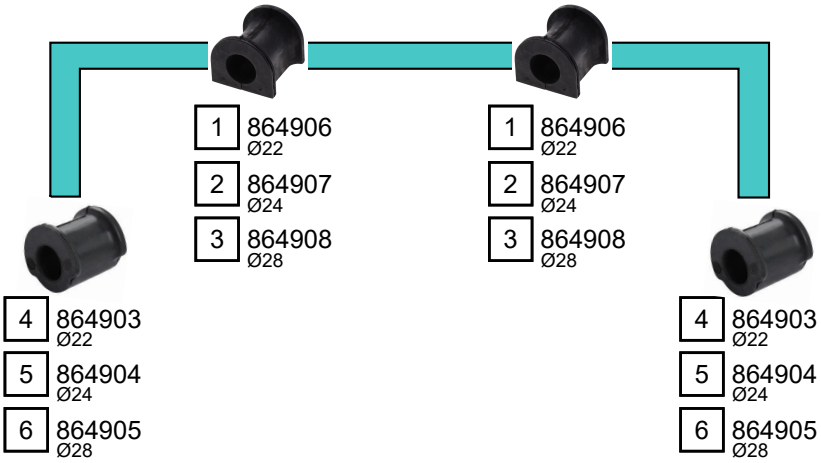

MAX WEIGHT 2.6T - 3.0T

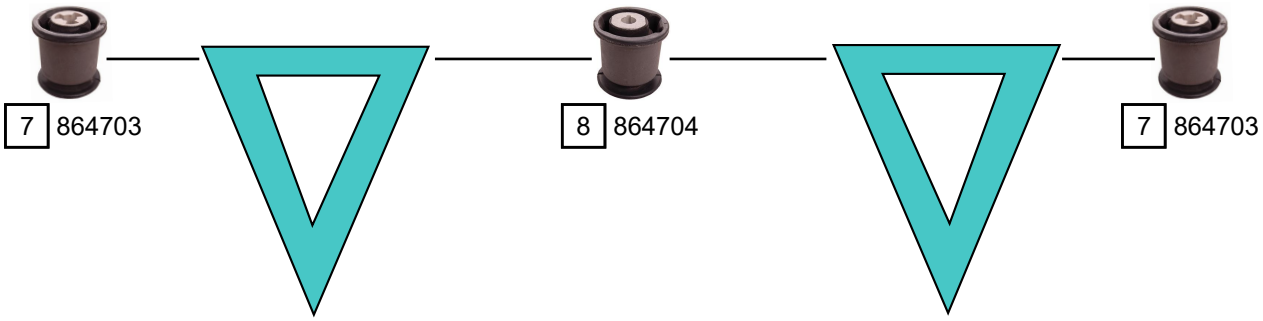

MAX WEIGHT 3.2T

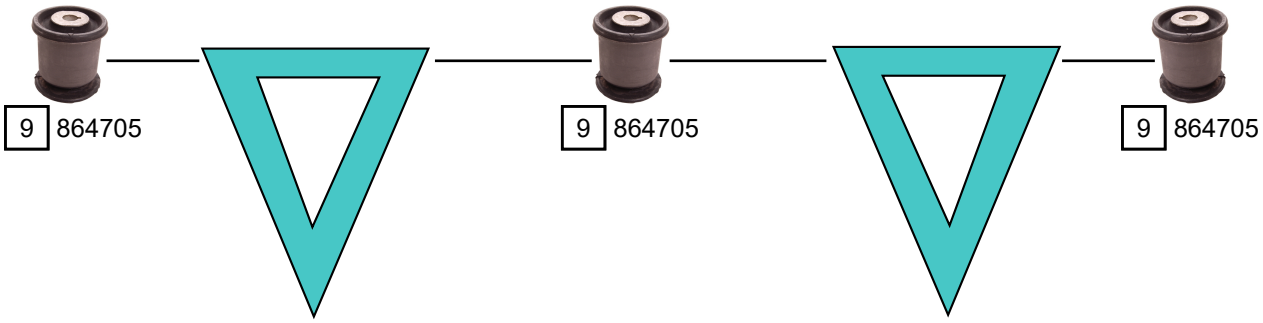

Ref.	Sidem Ref.	Description	OE-number	Measures	Ref.	Sidem Ref.	Description	OE-number	Measures
1	864906	stabiliser mounting	7H0 511 413 A	di:20.5	6	864905	stabiliser mounting	7H5 511 414 A	di:26.5
2	864907	stabiliser mounting	7H5 511 413 B	di:22.5	7	864703	silentblock for TCA	7H0 501 131 A	di:14.1 do:60.5 (*)
3	864908	stabiliser mounting	7H5 511 413 C	di:26.5	8	864704	silentblock for TCA	7H0 501 132 A	di:14.1 do:60.5 (*)
4	864903	stabiliser mounting	7H0 511 414	di:20.5	9	864705	silentblock for TCA	7H8 501 131	di:14.1 do:60.5 (*)
5	864904	stabiliser mounting	7H5 511 414	di:22.5					

Copyright 2021

VOLKSWAGEN
TRANSPORTER

TRANSPORTER VI (SG_,SH_,SF_,SJ_) 04/2015 ->

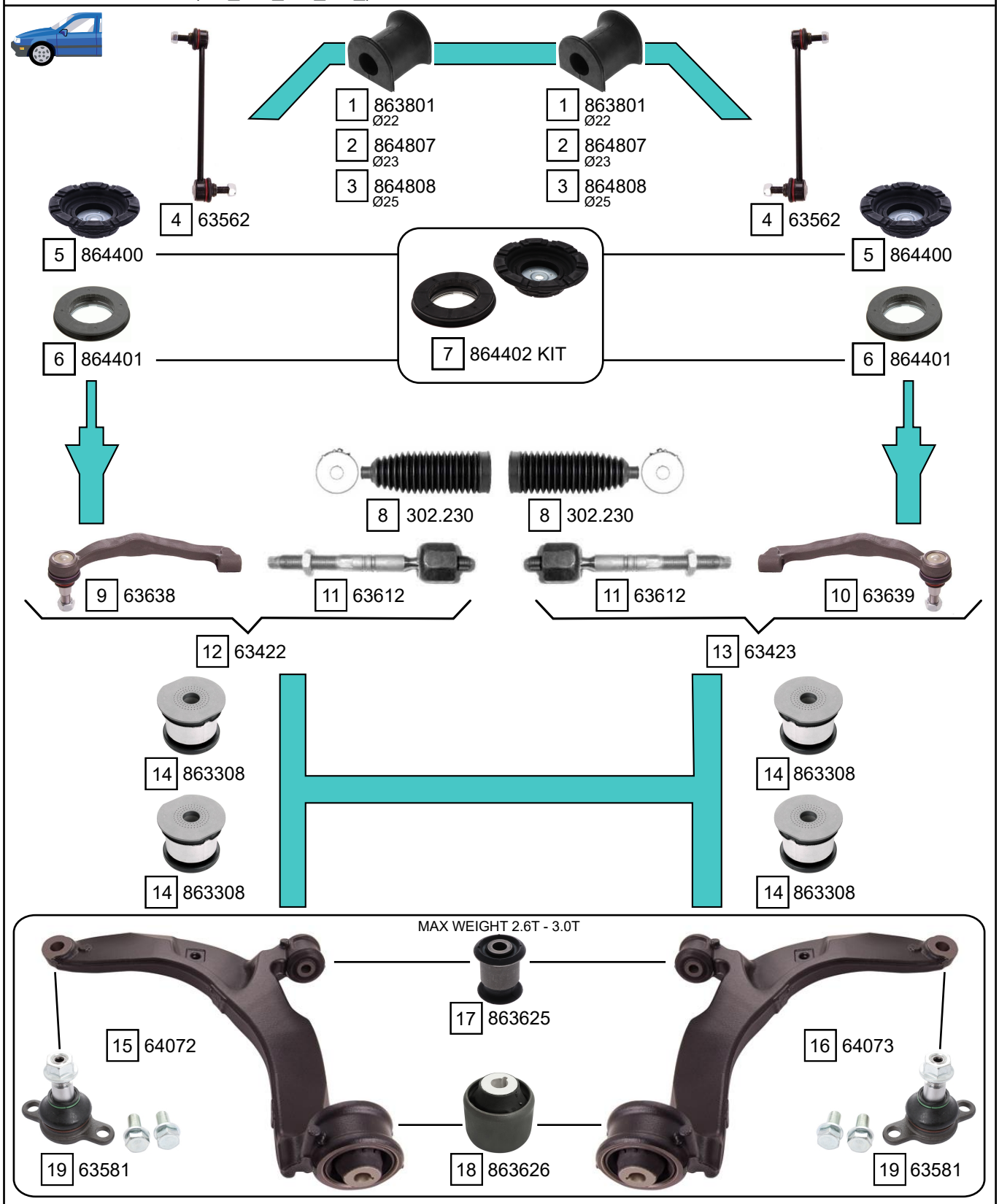

Ref.	Sidem Ref.	Description	OE-number	Measures	Ref.	Sidem Ref.	Description	OE-number	Measures
1	863801	stabiliser mounting	7H0 411 313	di:21	11	63612	axial joint	Part of	th:MM16x1.5R L:180
2	864807	stabiliser mounting	7H5 411 313 A	di:22	12	63422	tie rod left	7H0 419 803 D	c:16.7
3	864808	stabiliser mounting	7H5 411 313 B	di:23.5	13	63423	tie rod right	7H0 419 804 D	c:16.7
4	63562	stabiliser link	7H5 411 317 E	L:260	14	863308	mounting axle body	7H0 499 035 D	di:22.2 do:70.5
5	864400	strut mount	7E0 412 331 A	di:14.5 do:153 L:44	15	64072	TCA left wobj	7E0 407 151 C	c:21.5
6	864401	bearing	7E0 412 249 B	di:73.5 do:127 L:29.2	16	64073	TCA right wobj	7E0 407 152 B	c:21.5
7	864402 KIT	strut mount kit	7E0 412 331 A S1	di:14.5 do:154	17	863625	silentblock for TCA	7H0 407 183	di:14.2 do:40.3 (*)
8	302.230	steering rack gaiter	7H0 422 831	D:62 d:16 L:205	18	863626	silentblock for TCA	7H0 407 182 A	di:14.1 do:60.2 (*)
9	63638	tie rod end left	7H0 422 817 D	c:16.7 th:FM16x1.5R	19	63581	ball joint	7E0 407 361 A	c:18.2
10	63639	tie rod end right	7H0 422 818 D	c:16.7 th:FM16x1.5R					

Copyright 2021

TRANSPORTER VI (SG_,SH_,SF_,SJ_) 04/2015 ->

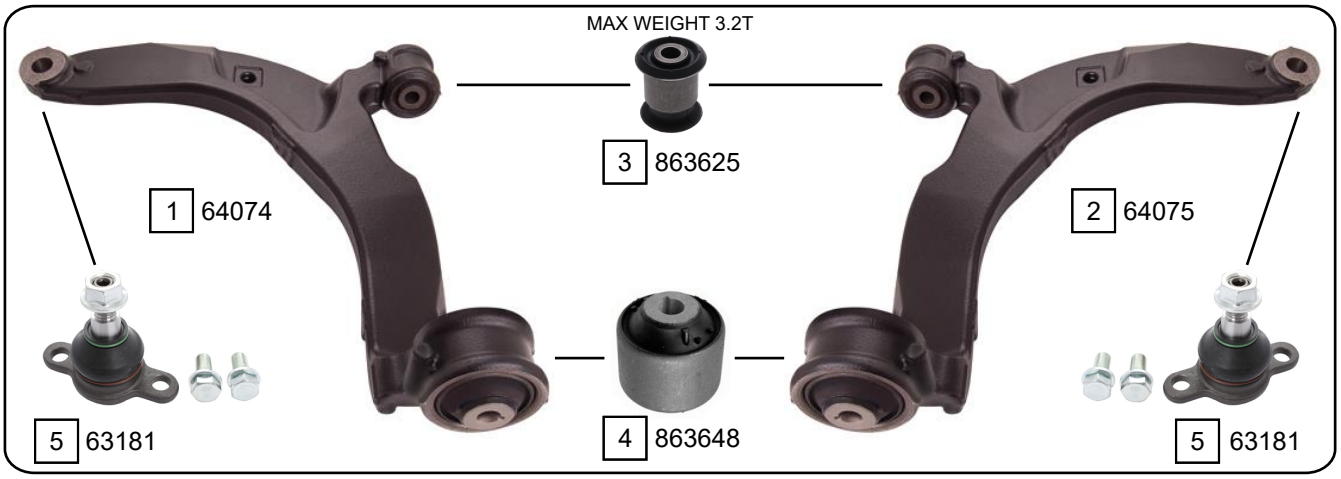

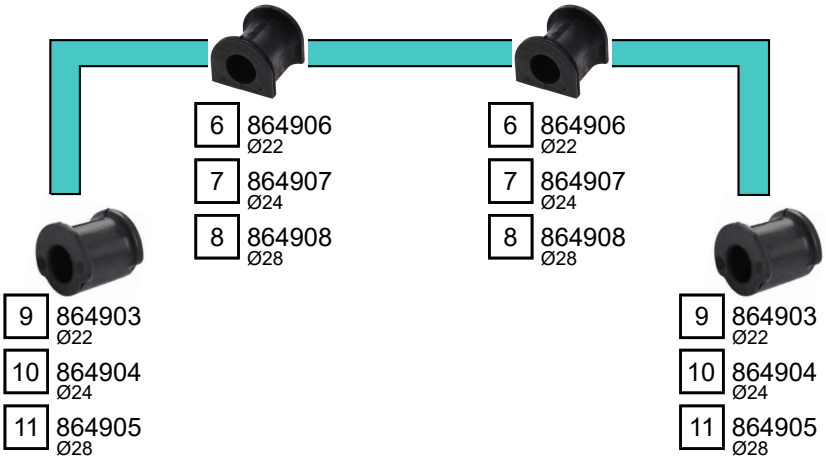

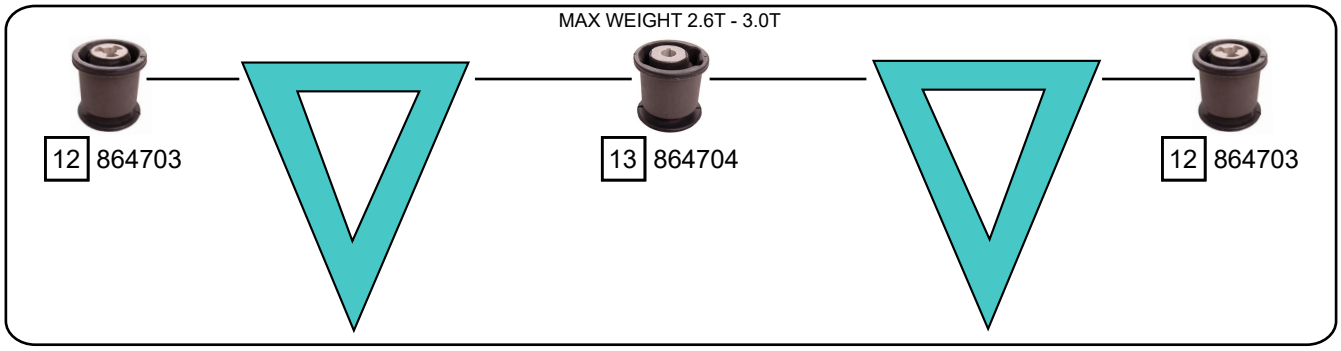

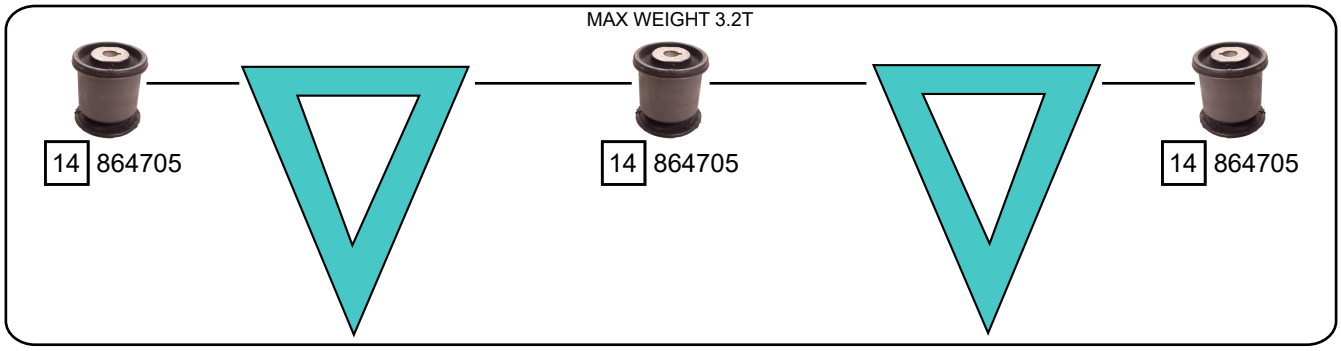

Ref.	Sidem Ref.	Description	OE-number	Measures	Ref.	Sidem Ref.	Description	OE-number	Measures
1	64074	TCA left wobj	7E8 407 151 B	c:21.5	8	864908	stabiliser mounting	7H5 511 413 C	di:26.5
2	64075	TCA right wobj	7E8 407 152 A	c:21.5	9	864903	stabiliser mounting	7H0 511 414	di:20.5
3	863625	silentblock for TCA	7H0 407 183	di:14.2 do:40.3 (*)	10	864904	stabiliser mounting	7H5 511 414	di:22.5
4	863648	silentblock for TCA	7H0 407 182	di:14.2 do:60.1 (*)	11	864905	stabiliser mounting	7H5 511 414 A	di:26.5
5	63181	ball joint	7H8 407 361 A	c:18.2	12	864703	silentblock for TCA	7H0 501 131 A	di:14.1 do:60.5 (*)
6	864906	stabiliser mounting	7H0 511 413 A	di:20.5	13	864704	silentblock for TCA	7H0 501 132 A	di:14.1 do:60.5 (*)
7	864907	stabiliser mounting	7H5 511 413 B	di:22.5	14	864705	silentblock for TCA	7H8 501 131	di:14.1 do:60.5 (*)

Copyright 2021

VOLKSWAGEN
T-ROC

T-ROC (A11) 07/2017 ->
T-ROC CABRIO (AC7) 12/2019 ->

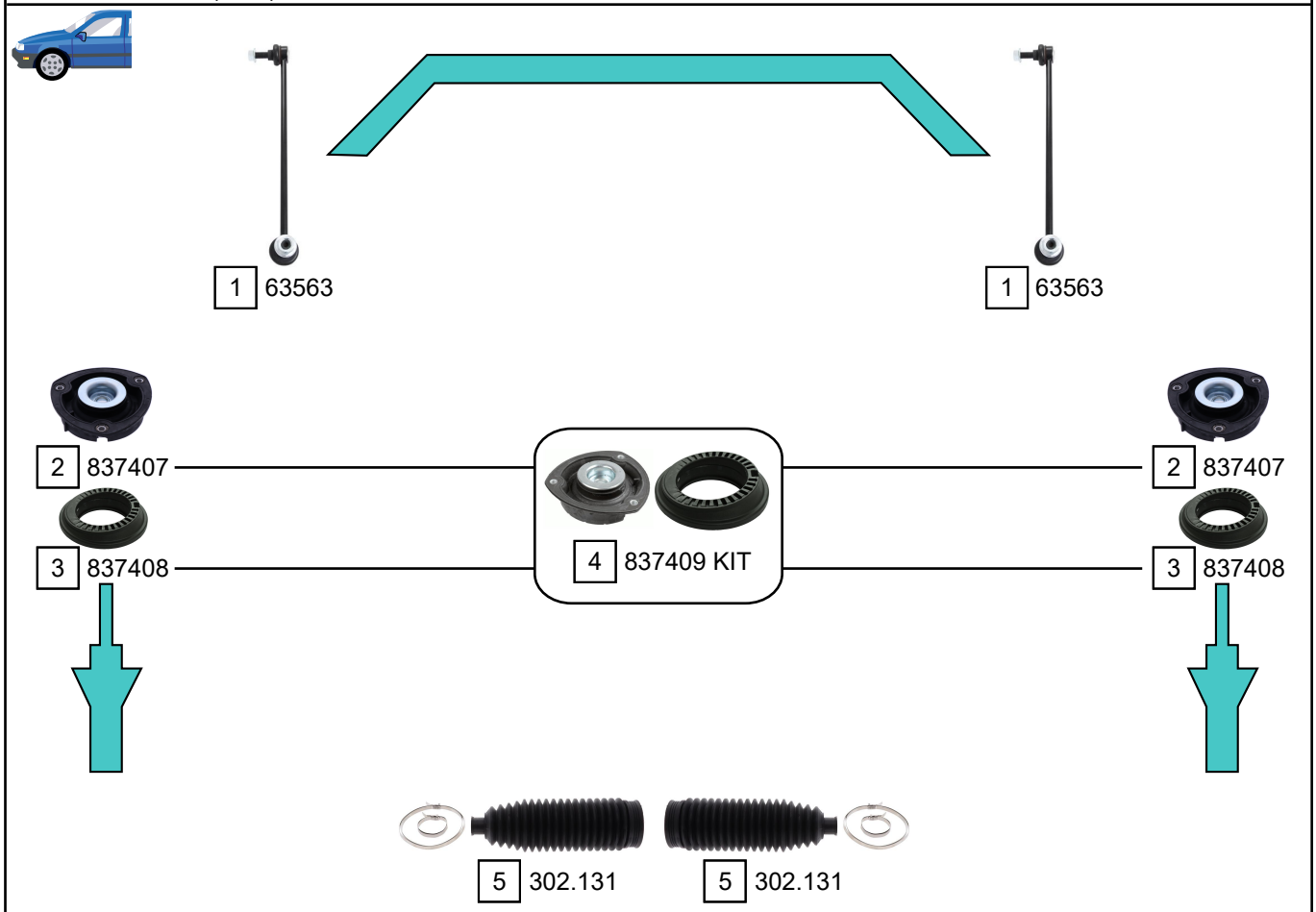

STEEL WHEEL BEARING HOUSING

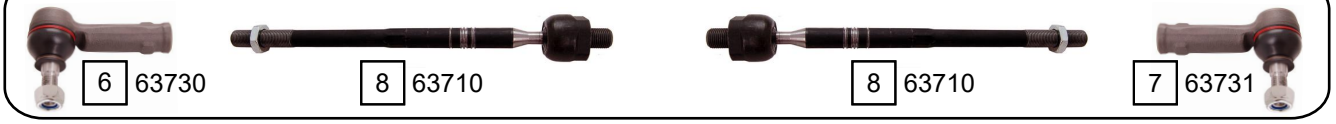

ALU WHEEL BEARING HOUSING

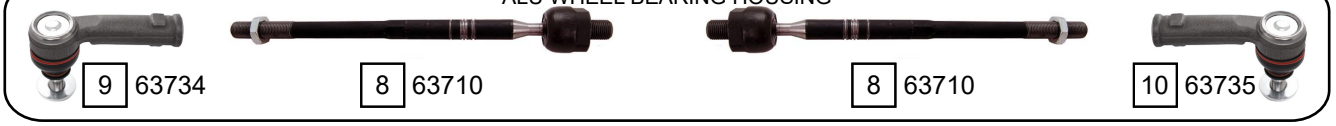

Ref.	Sidem Ref.	Description	OE-number	Measures	Ref.	Sidem Ref.	Description	OE-number	Measures
1	63563	stabiliser link	5Q0 411 315 A	L:335	6	63730	tie rod end left	1K0 423 811 J S1	c:13.2 th:FM16x1.5R
2	837407	strut mount	5Q0 412 331 E	di:14.6 do:64.1 L:42	7	63731	tie rod end right	1K0 423 812 J S1	c:13.2 th:FM16x1.5R
3	837408	bearing	5Q0 412 249 F	di:74 do:127 L:38.6	8	63710	axial joint	1K0 423 810 A	th:MM16X1.5R L:312
4	837409 KIT	strut mount kit	5Q0 412 331 E S1	di:14.6 do:127	9	63734	tie rod end left	1K0 423 811 J S2	c:13.2 th:FM16X1.5R
5	302.131	steering rack gaiter	1K0 423 831 A	D:50 d:15 L:193	10	63735	tie rod end right	1K0 423 812 J S2	c:13.2 th:FM16X1.5R

Copyright 2021

VOLKSWAGEN
T-ROC

T-ROC (A11) 07/2017 ->
T-ROC CABRIO (AC7) 12/2019 ->

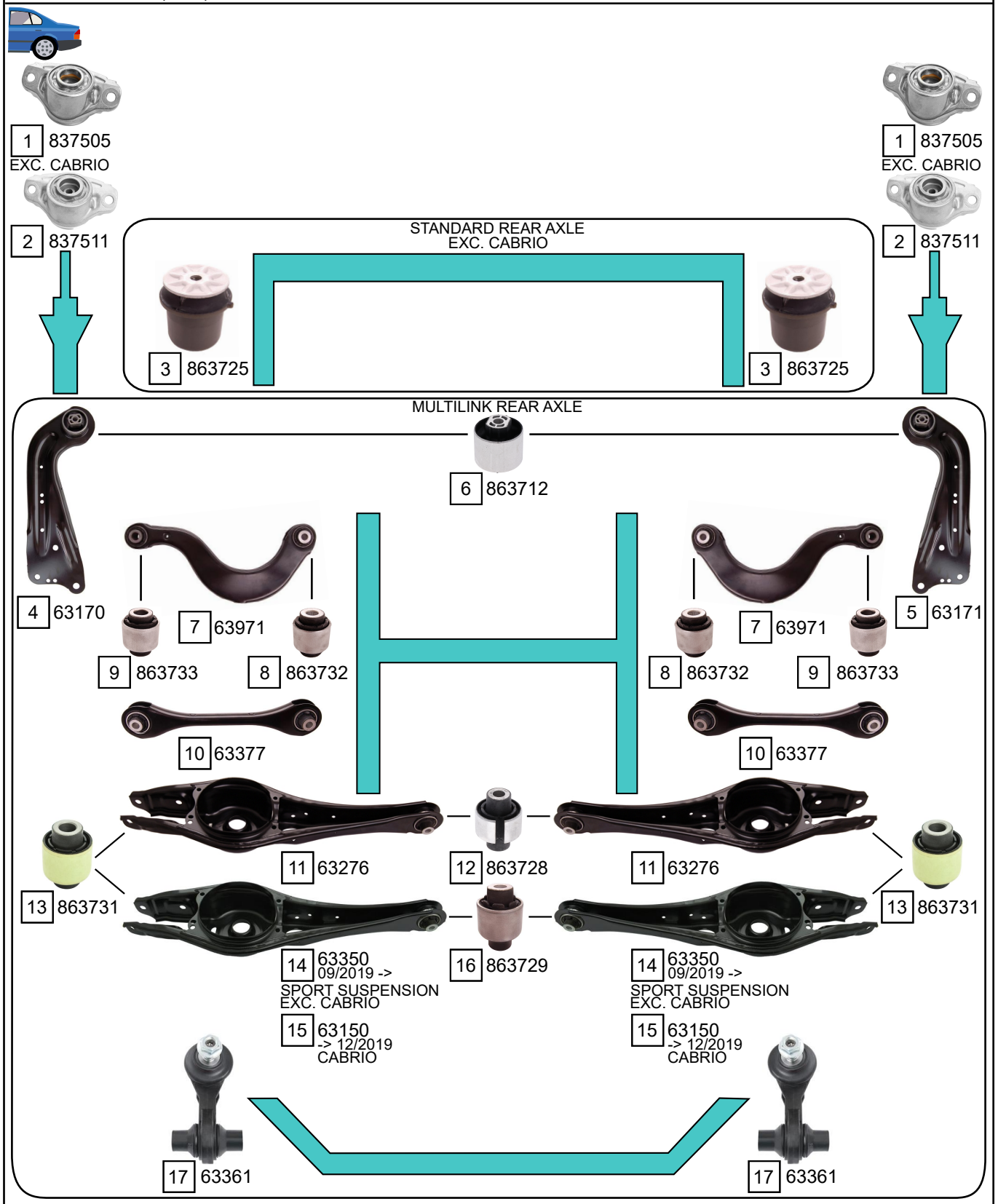

Ref.	Sidem Ref.	Description	OE-number	Measures	Ref.	Sidem Ref.	Description	OE-number	Measures
1	837505	strut mount	5Q0 513 353 G	di:10.2 do:65.8 L:63.3	10	63377	track rod	5Q0 501 529 F	L:282
2	837511	strut mount	5Q0 513 353 K	di:10.2 do:65.8 L:63.3	11	63276	TCA	5Q0 505 311 D	
3	863725	mounting axle body	5Q0 501 541 C	di:12.5 do:72	12	863728	silentblock for TCA	Part of	di:12 do:44.3 (*)
4	63170	TCA left	5Q0 505 223 D	L:384	13	863731	silentblock for TCA	5Q0 505 553	di:12.1 do:37.4 (*)
5	63171	TCA right	5Q0 505 224 D	L:384	14	63350	TCA	5WA 505 311 A	
6	863712	silentblock for TCA	1K0 505 541 B	di:12.2 do:60.2 (*)	15	63150	TCA	5QA 505 311 E	
7	63971	track rod	5Q0 505 323 C	L:305	16	863729	silentblock for TCA	Part of	di:12.1 do:44.3 (*)
8	863732	silentblock for TCA	Part of	di:12.1 do:38.3 (*)	17	63361	stabiliser link rear axle	5Q0 505 465 C	L:70
9	863733	silentblock for TCA	Part of	di:14.3 do:38.2 (*)					

Copyright 2021

VOLKSWAGEN
UP

UP (121, 122, BL1, BL2) 12/2011 ->

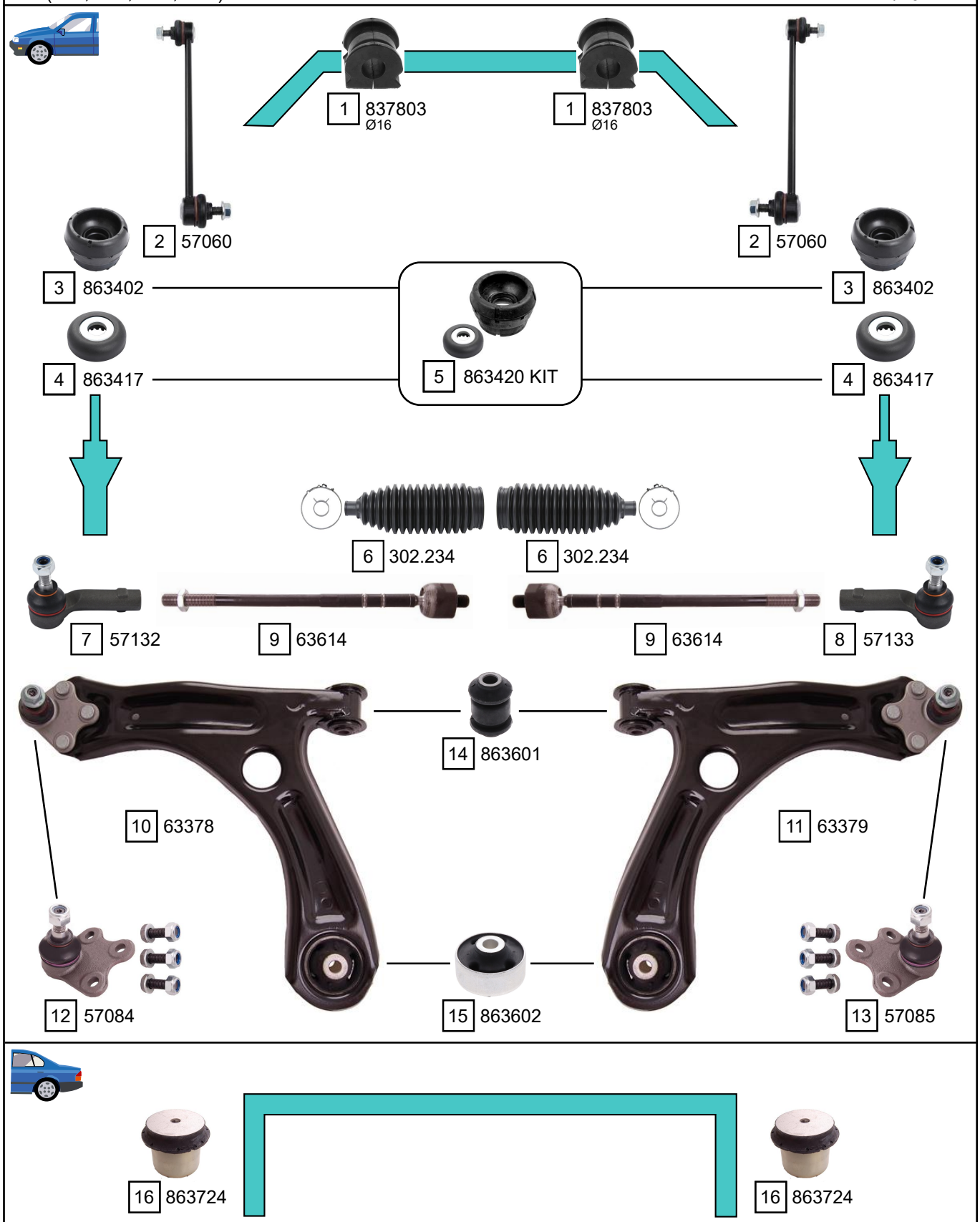

Ref.	Sidem Ref.	Description	OE-number	Measures	Ref.	Sidem Ref.	Description	OE-number	Measures
1	837803	stabiliser mounting	6Q0 411 314 P	di:16	9	63614	axial joint	1S0 423 810 A	th:MM14X1.5R L:306
2	57060	stabiliser link	6R0 411 315	L:270	10	63378	TCA left wbj	1S0 407 151	c:15
3	863402	strut mount	1J0 412 331 C	di:26 do:82 L:53	11	63379	TCA right wbj	1S0 407 152	c:15
4	863417	bearing	1J0 412 249	di:14.3 do:45.3 L:13.4	12	57084	ball joint left	6R0 407 365 A	c:14.9
5	863420 KIT	strut mount kit	1J0 412 331 C S1	di:26 do:82 L:53	13	57085	ball joint right	6R0 407 366 A	c:14.9
6	302.234	steering rack gaiter	1S0 423 831 E	D:44 d:14 L:164	14	863601	silentblock for TCA	357 407 182	di:12 do:32.6 (*)
7	57132	tie rod end left	6R0 423 811	c:13.4 th:FM14x1.5R	15	863602	silentblock for TCA	1J0 407 181	di:13 do:60 (*)
8	57133	tie rod end right	6R0 423 812	c:13.4 th:FM14x1.5R	16	863724	mounting axle body	1S0 501 541 B	di:10 do:58

Copyright 2021

VOLKSWAGEN
VENTO

VENTO (1H2) 11/1991 - 09/1998

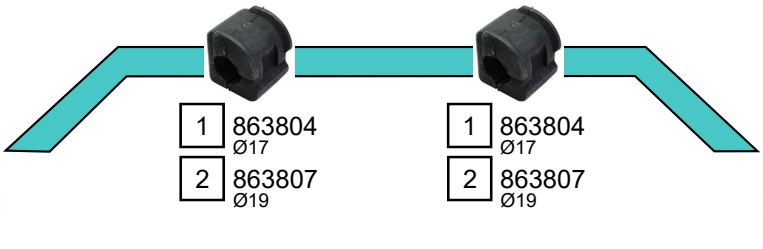

3 63460
FOR STABI Ø20

4 63469
FOR STABI Ø21.5

3 63460
FOR STABI Ø20

4 63469
FOR STABI Ø21.5

-> CHAS 1H-SW062 538
-> CHAS 1H-SB019 475

5 863401

6 863403

7 863406 KIT

5 863401

6 863403

CHAS 1H-SW062 539 ->
CHAS 1H-SB019 476 ->

8 863404

9 863417

10 863407 KIT

8 863404

9 863417

Ref.	Sidem Ref.	Description	OE-number	Measures	Ref.	Sidem Ref.	Description	OE-number	Measures
1	863804	stabiliser mounting	191 411 314	di:17	6	863403	strut mount	357 412 329	di:14 do:127 L:55
2	863807	stabiliser mounting	1H0 411 314	di:19	7	863406 KIT	strut mount kit	191 412 329 S1	di:14.5 do:127 L:53
3	63460	stabiliser link	535 411 315	L:51	8	863404	strut mount	7M0 412 331	di:26.5 do:96.7 L:50
4	63469	stabiliser link	191 411 315 B	L:76	9	863417	bearing	1J0 412 249	di:14.3 do:45.3 L:13.4
5	863401	strut mount	191 412 329	di:14.5 do:89.3 L:52	10	863407 KIT	strut mount kit	7M0 412 331 S1	di:14.3 do:98 L:50

Copyright 2021

VENTO (1H2) 11/1991 - 09/1998

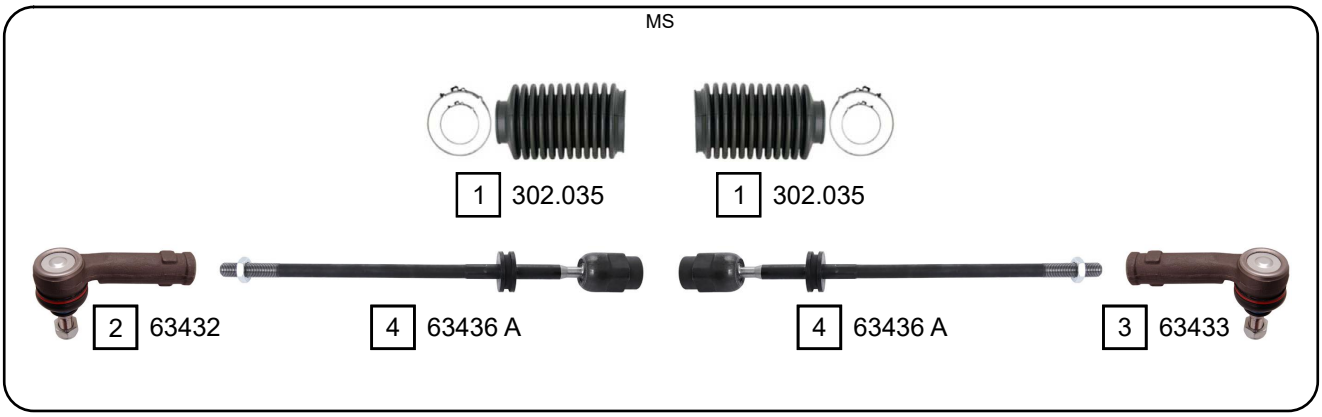

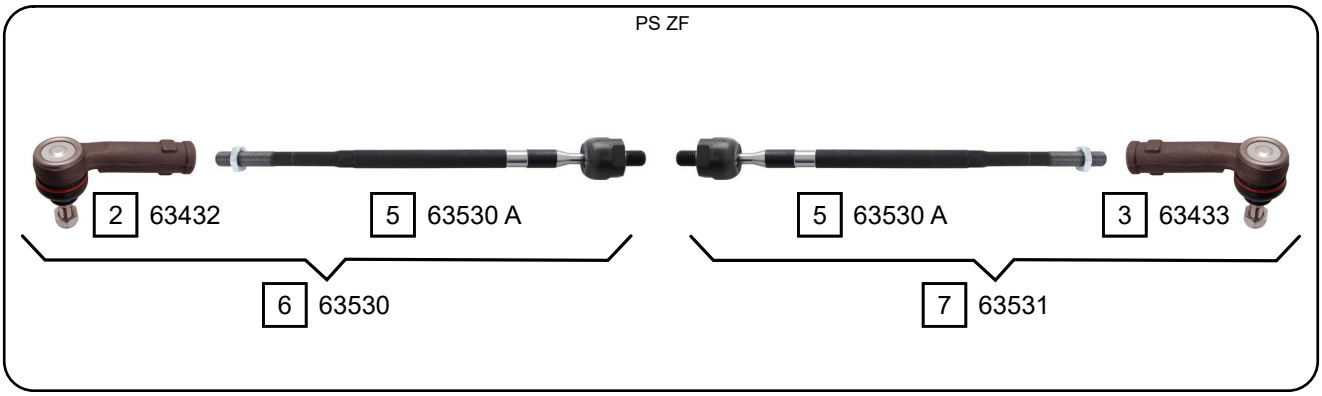

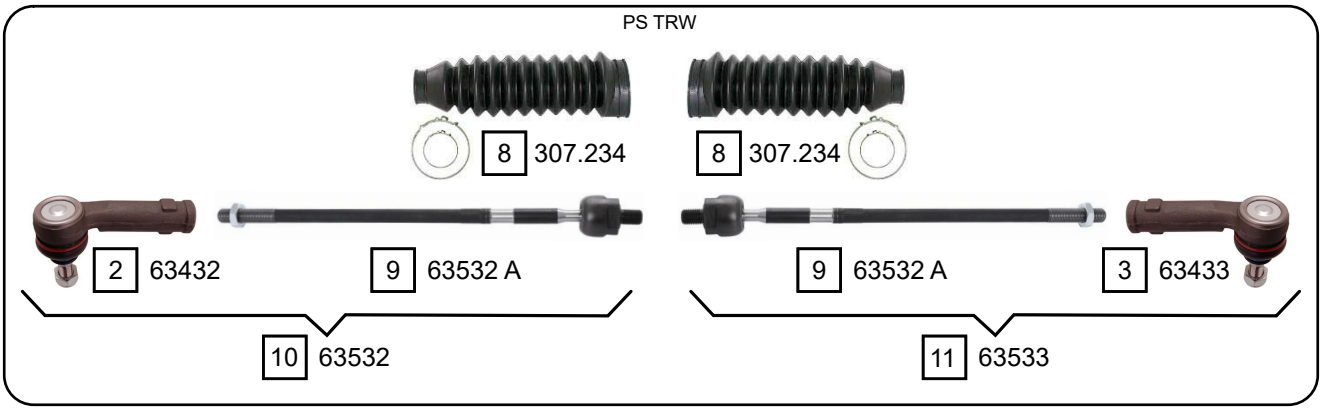

Ref.	Sidem Ref.	Description	OE-number	Measures	Ref.	Sidem Ref.	Description	OE-number	Measures
1	302.035	steering rack gaiter	191 419 831	D:41 d:25 L:120	7	63531	tie rod right	1H0 422 804 B	c:12.6
2	63432	tie rod end left	6N0 419 811	c:12.6 th:FM14x1.5R	8	307.234	steering rack gaiter	1H0 422 831 B	D:41 d:10 L:210
3	63433	tie rod end right	6N0 422 812	c:12.6 th:FM14x1.5R	9	63532 A	axial joint	Part of	th:MM14X1.5R L:371
4	63436 A	axial joint	1H0 419 821	th:FM22X1.5R L:395	10	63532	tie rod left	1H0 422 803 D	c:12.6
5	63530 A	axial joint	Part of	th:MM14X1.5R L:360	11	63533	tie rod right	1H0 422 804 D	c:12.6
6	63530	tie rod left	1H0 422 803 B	c:12.6					

Copyright 2021

VOLKSWAGEN
VENTO

VENTO (1H2) 11/1991 - 09/1998

EXC. 2.0 GT / 2.8 VR6

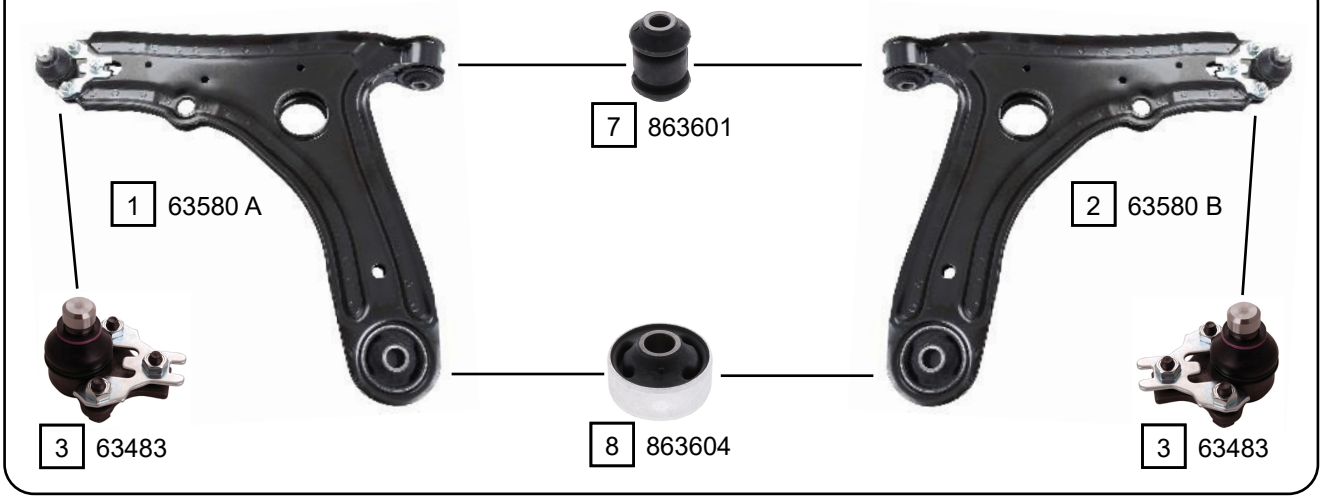

2.0 GT / 2.8 VR6

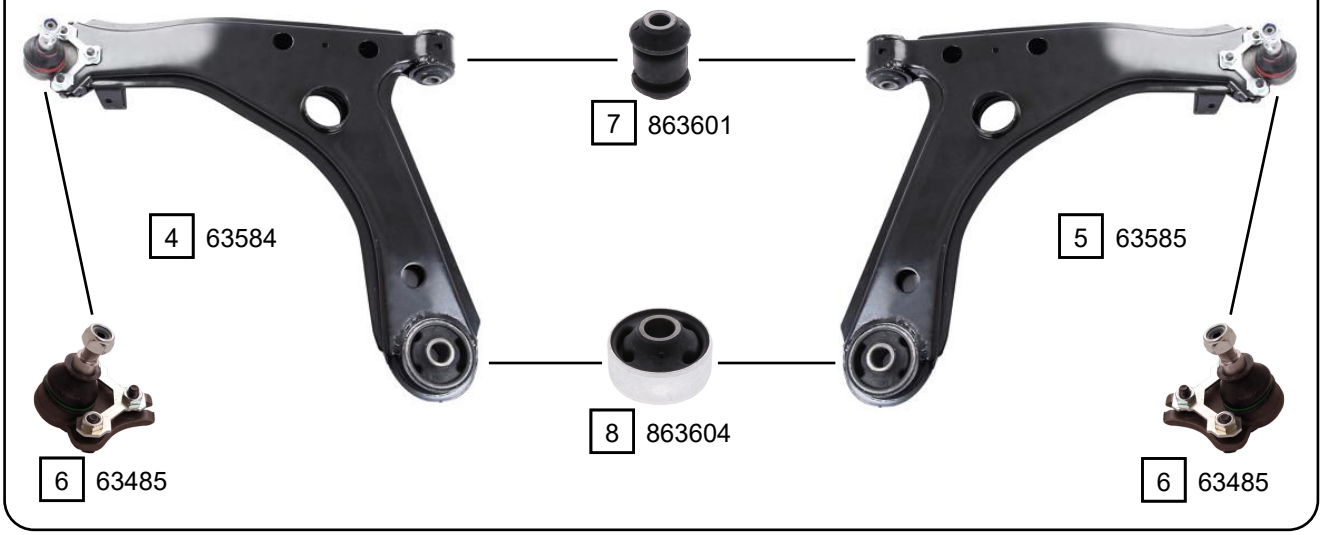

Ref.	Sidem Ref.	Description	OE-number	Measures	Ref.	Sidem Ref.	Description	OE-number	Measures
1	63580 A	TCA left wbj	1H0 407 151 S1	c:19	5	63585	TCA right wbj	1H0 407 152 S1	c:16.5
2	63580 B	TCA right wbj	1H0 407 151 S2	c:19	6	63485	ball joint lower	1H0 407 365	c:16.5
3	63483	ball joint lower	357 407 365 A	c:19	7	863601	silentblock for TCA	357 407 182	di:12 do:32.6 (*)
4	63584	TCA left wbj	1H0 407 151 A S1	c:16.5	8	863604	silentblock for TCA	191 407 181 D	di:17 do:60.1 (*)

Copyright 2021

VOLKSWAGEN
VENTO

VENTO (1H2) 11/1991 - 09/1998

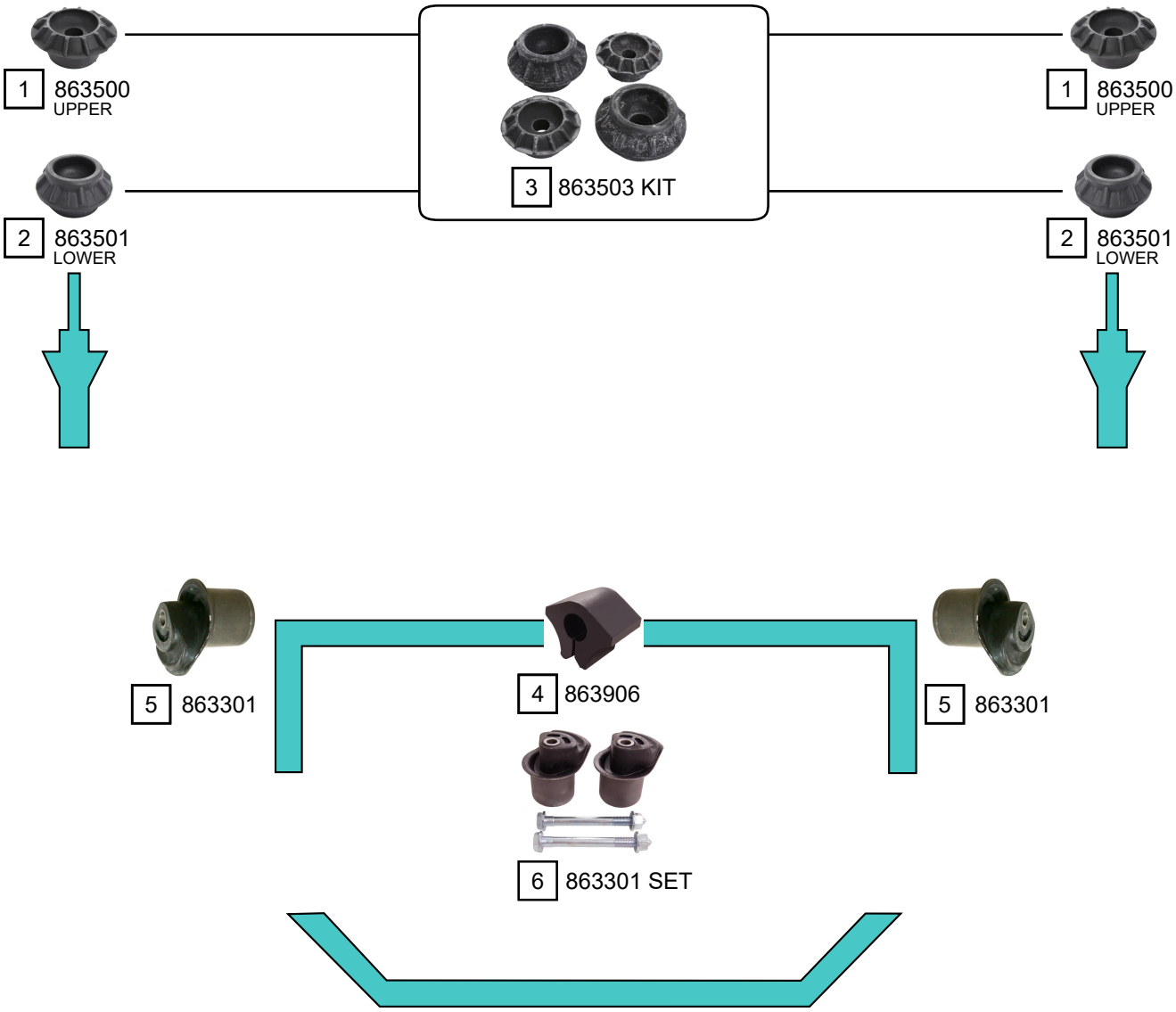

Ref.	Sidem Ref.	Description	OE-number	Measures	Ref.	Sidem Ref.	Description	OE-number	Measures
1	863500	strut mount	191 512 335	di:13.5 do:59 L:27.5	4	863906	stabiliser mounting	871 511 423	di:16.5
2	863501	strut mount	191 512 333	di:17.5 do:70 L:40	5	863301	mounting axle body	1H0 501 541 A	di:12 do:56
3	863503 KIT	strut mount kit	191 512 335 S1	di:13.5	6	863301 SET	mounting axle body set	1H0 501 541 A S1	di:12 do:56

Copyright 2021

VOLKSWAGEN
VENTO

VENTO (60_) 04/2010 ->

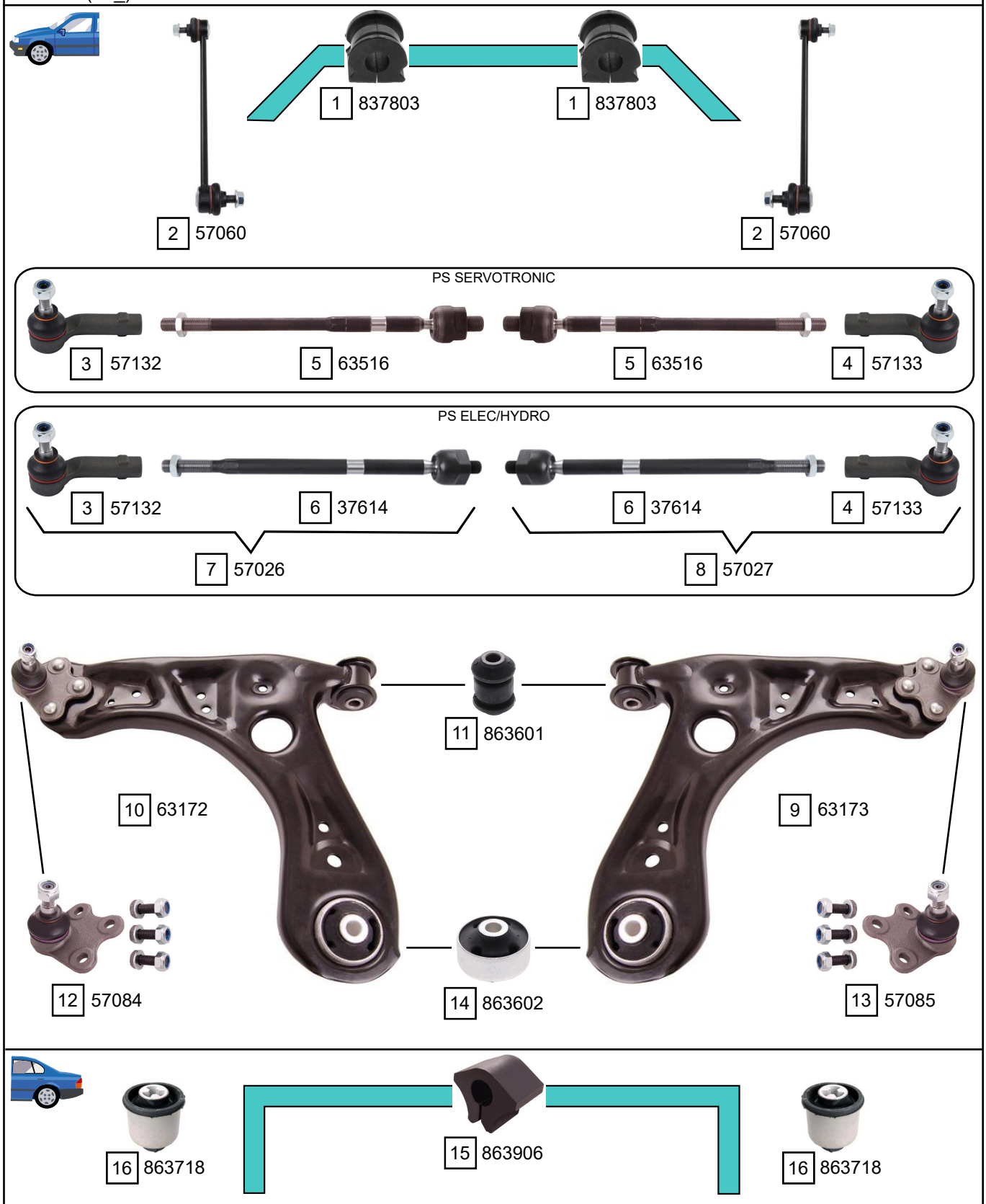

Ref.	Sidem Ref.	Description	OE-number	Measures	Ref.	Sidem Ref.	Description	OE-number	Measures
1	837803	stabiliser mounting	6Q0 411 314 P	di:16	9	63173	TCA right wbj	6RF 407 152 B	c:15
2	57060	stabiliser link	6R0 411 315	L:270	10	63172	TCA left wbj	6RF 407 151 B	c:15
3	57132	tie rod end left	6R0 423 811	c:13.4 th:FM14x1.5R	11	863601	silentblock for TCA	357 407 182	di:12 do:32.6 (*)
4	57133	tie rod end right	6R0 423 812	c:13.4 th:FM14x1.5R	12	57084	ball joint left	6R0 407 365 A	c:14.9
5	63516	axial joint	6RU 423 810	th:MM16X1.5R L:312	13	57085	ball joint right	6R0 407 366 A	c:14.9
6	37614	axial joint	Part of	th:MM14x1.5R L:313	14	863602	silentblock for TCA	1J0 407 181	di:13 do:60 (*)
7	57026	tie rod left	6R0 423 803 A	c:13.4	15	863906	stabiliser mounting	871 511 423	di:16.5
8	57027	tie rod right	6R0 423 804 A	c:13.4	16	863718	mounting axle body	6R0 501 541 A	do:71.6

Copyright 2021