VOLVO

240 - 244 - 245 - 262 - 264 - 265

240 / 244 / 245 / 262 / 264 / 265 — 08/1974 - 08/1993

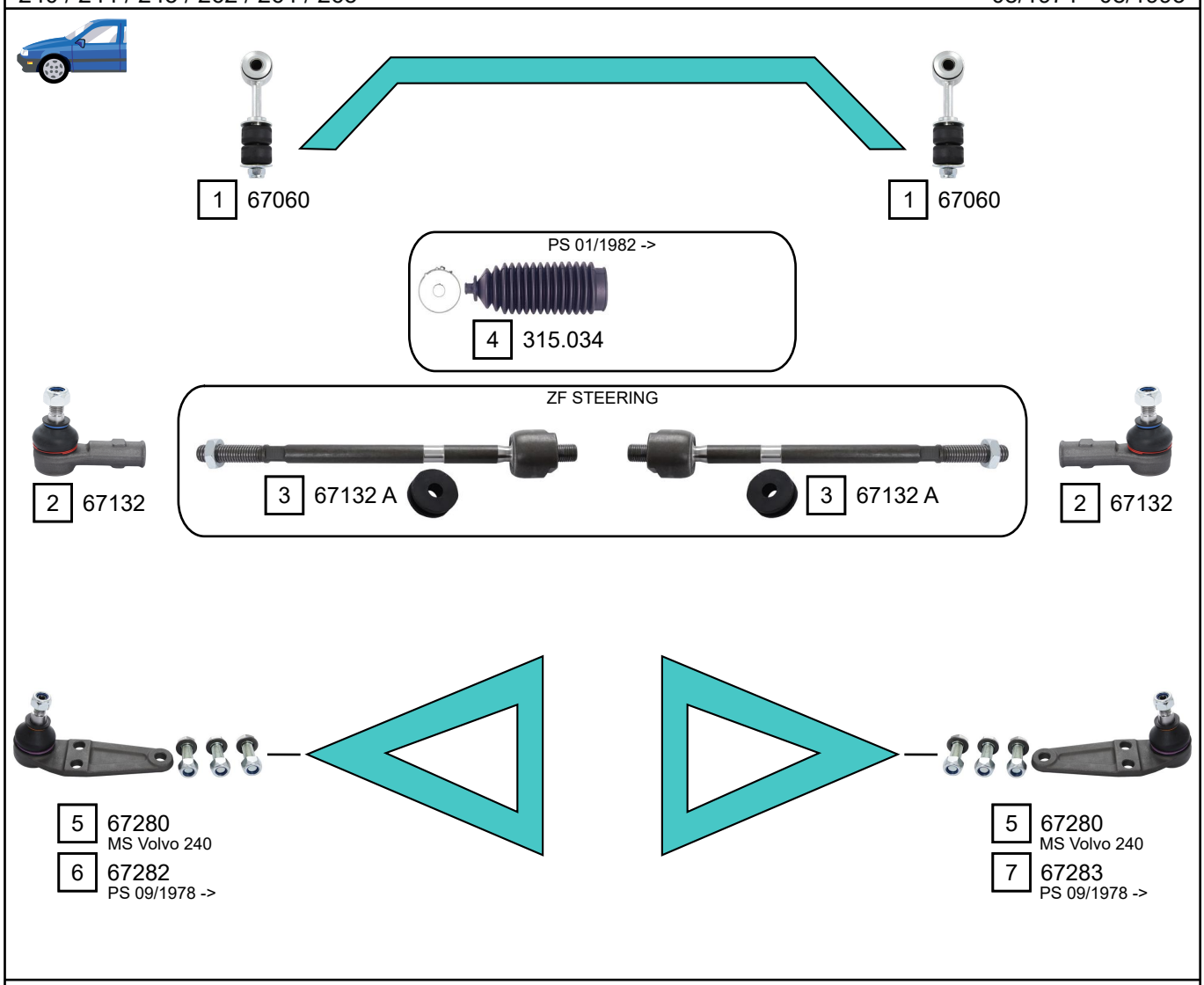

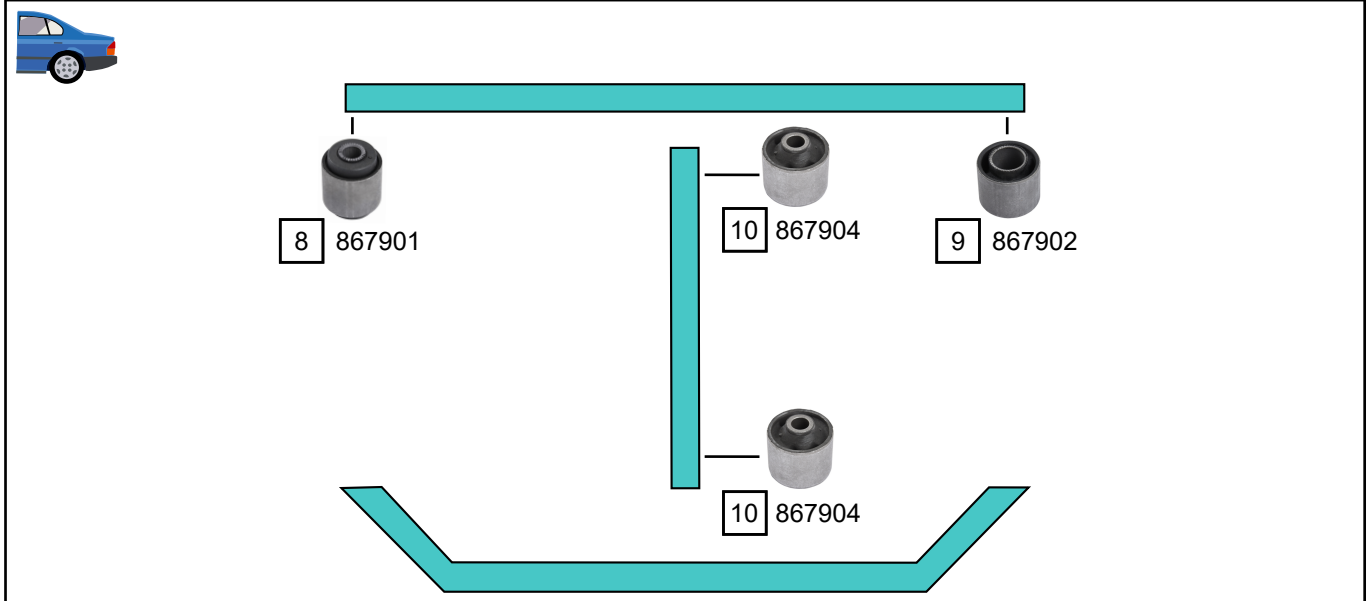

Ref.	Sidem Ref.	Description	OE-number	Measures	Ref.	Sidem Ref.	Description	OE-number	Measures
1	67060	stabiliser link	1 206 667	L:141	6	67282	ball joint lower left	274 118	c:15.4
2	67132	tie rod end	3 516 944	c:12.8 th:FM14X2R	7	67283	ball joint lower right	274 119	c:15.4
3	67132 A	axial joint	3 530 167	th:MM14x1.5R	8	867901	silentblock for TCA	1 330 973	di:12.2 do:40.2 (*)
4	315.034	steering rack gaiter	1 272 924	D:44 d:10 L:185	9	867902	silentblock for TCA	1 330 427	di:20.2 do:40.2 (*)
5	67280	ball joint lower	1 205 811	c:15.4	10	867904	silentblock for TCA	1 273 622	di:12.5 do:48 (*)

Copyright 2021

VOLVO

340 - 343 - 344 - 345 - 360

340 / 343 / 344 / 345 / 360 — 08/1975 - 07/1991

1 63234

1 63234

Ref.	Sidem Ref.	Description	OE-number	Measures	Ref.	Sidem Ref.	Description	OE-number	Measures
1	63234	tie rod end	3 211 955	c:12.6 th:FM14x1.5R					

Copyright 2021

VOLVO
440 - 460 - 480

440 K (445)	08/1988 - 12/1996
460 L (464)	09/1988 - 07/1996
480 E	04/1986 - 07/1996

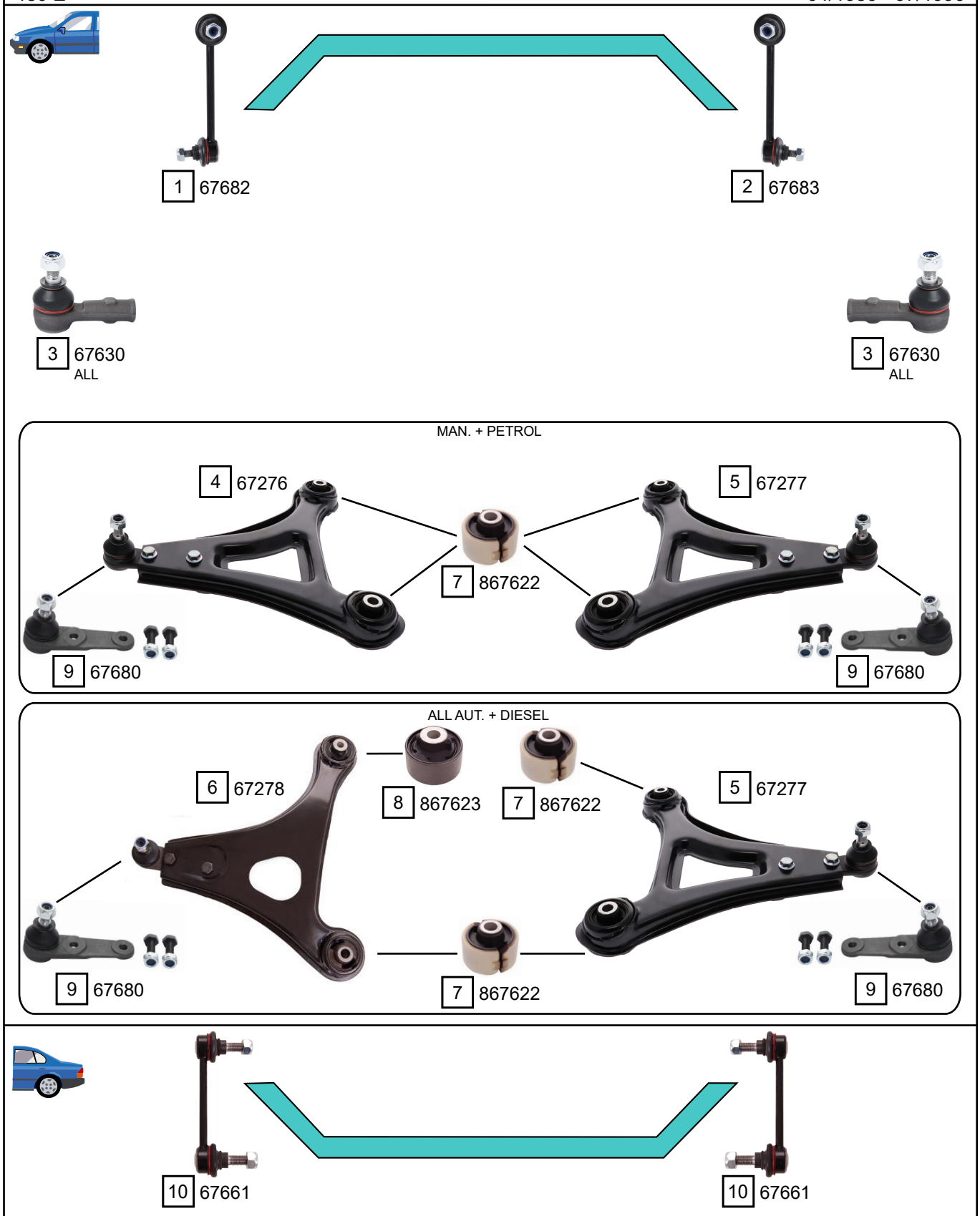

Ref.	Sidem Ref.	Description	OE-number	Measures	Ref.	Sidem Ref.	Description	OE-number	Measures
1	67682	stabiliser link	3 467 713	L:160	6	67278	TCA left wbj	3 421 396	c:14.3
2	67683	stabiliser link	8 416 130	L:160	7	867622	silentblock for TCA	3 411 810	di:12.5 do:57.8 (*)
3	67630	tie rod end	3 480 012	c:13.3 th:FM12X1.25R	8	867623	silentblock for TCA	3 432 664	di:12.2 do:54.3 (*)
4	67276	TCA left wbj	3 443 998	c:14.3	9	67680	ball joint lower	3 465 482	c:14.3
5	67277	TCA right wbj	3 443 999	c:14.3	10	67661	stabiliser link rear axle	3 434 868	L:100

Copyright 2021

VOLVO
740 - 760 - 780

740 / 760 / 780 — 08/1981 - 09/1992

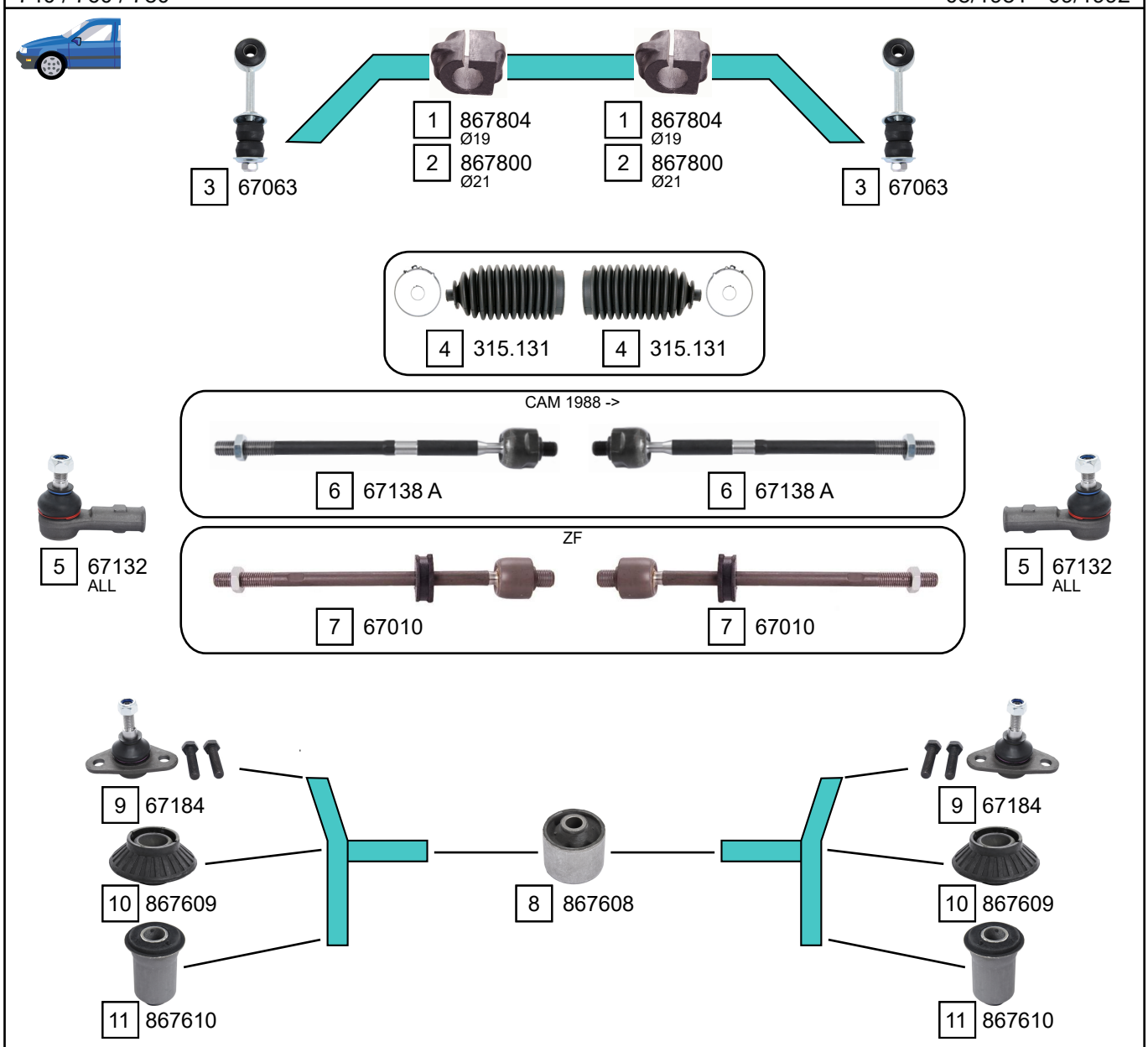

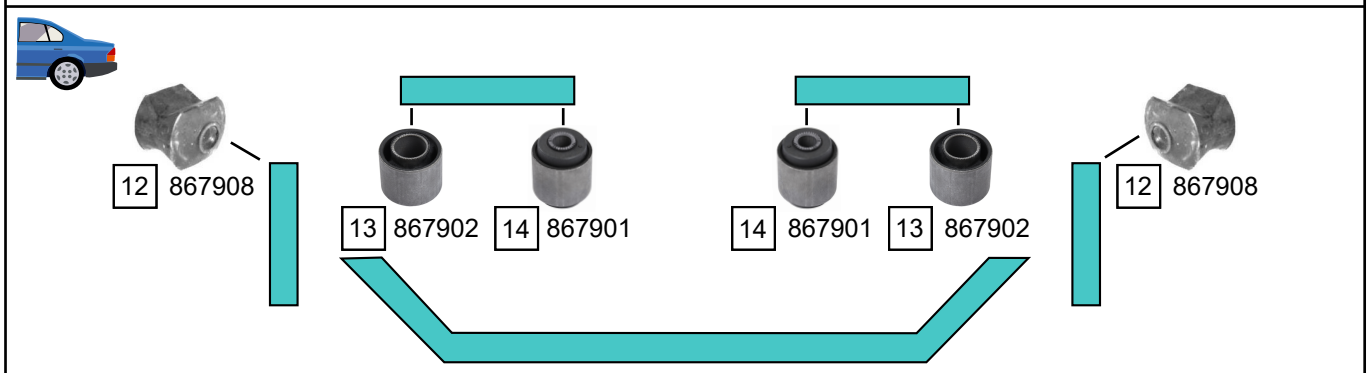

Ref.	Sidem Ref.	Description	OE-number	Measures	Ref.	Sidem Ref.	Description	OE-number	Measures
1	867804	stabiliser mounting	1 229 389	di:19	8	867608	silentblock for TCA	1 329 655	di:14.2 do:47 (*)
2	867800	stabiliser mounting	1 273 184	di:21	9	67184	ball joint lower	270 477	c:15.5
3	67063	stabiliser link	9 157 725	L:140	10	867609	silentblock for TCA	1 359 599	di:17 (*)
4	315.131	steering rack gaiter	271 554	D:51 d:10 L:153	11	867610	silentblock for TCA	1 273 235	di:12.3 do:37.1 (*)
5	67132	tie rod end	3 516 944	c:12.8 th:FM14X2R	12	867908	silentblock for TCA	1 272 306	di:14.5 (*)
6	67138 A	axial joint	9 140 504	th:MM14X1.5R L:292	13	867902	silentblock for TCA	1 330 427	di:20.2 do:40.2 (*)
7	67010	axial joint	271 389	th:MM16x1.5R L:293	14	867901	silentblock for TCA	1 330 973	di:12.2 do:40.2 (*)

Copyright 2021

850 | 09/1991 - 10/1996

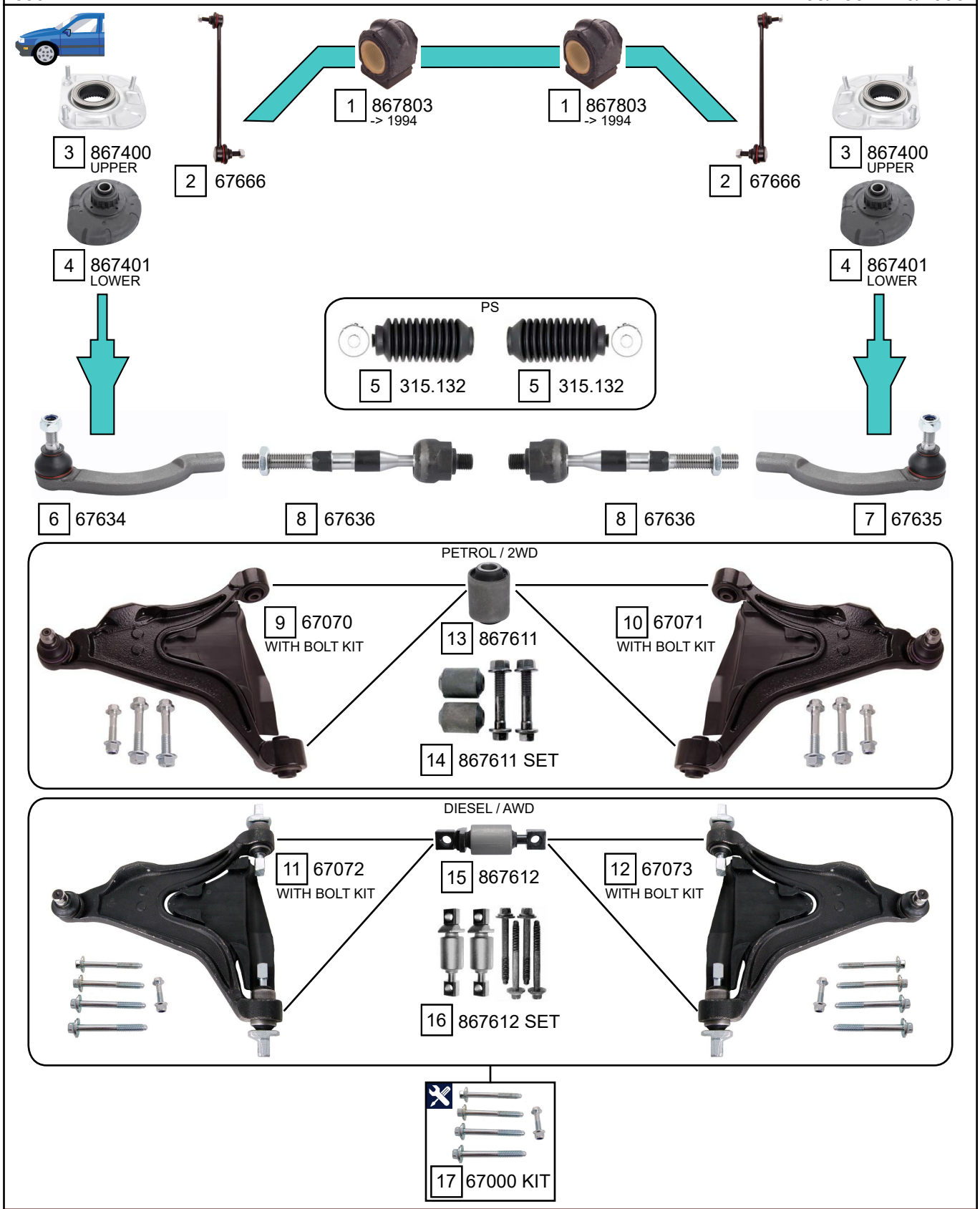

Ref.	Sidem Ref.	Description	OE-number	Measures	Ref.	Sidem Ref.	Description	OE-number	Measures
1	867803	stabiliser mounting	3 546 730	di:20.5	10	67071	TCA right wbj	8 628 496	c:19
2	67666	stabiliser link	31 212 730	L:301	11	67072	TCA left wbj	8 628 497	c:19
3	867400	strut mount	31 200 599	di:45.1 L:45	12	67073	TCA right wbj	8 628 498	c:19
4	867401	strut mount	30 683 637	di:16.5 do:144 L:55	13	867611	silentblock	6 800 251	di:12 do:32 (*)
5	315.132	steering rack gaiter	272 418	D:50 d:14 L:204	14	867611 SET	silentblock kit	271 631	
6	67634	tie rod end left	271 598	c:13.1 th:F M14X2R	15	867612	silentblock for TCA	Part of	do:32.3 (*)
7	67635	tie rod end right	271 599	c:13.1 th:FM14X2R	16	867612 SET	silentblock kit	8 628 497 S1	
8	67636	axial joint	3 546 266	th:MM14X1.5R L:176	17	67000 KIT	mounting kit	Part of	th:M12x1.75R
9	67070	TCA left wbj	8 628 495	c:19					

Copyright 2021

VOLVO
850

850 09/1991 - 10/1996

1 867501

1 867501

2 867304

2 867304

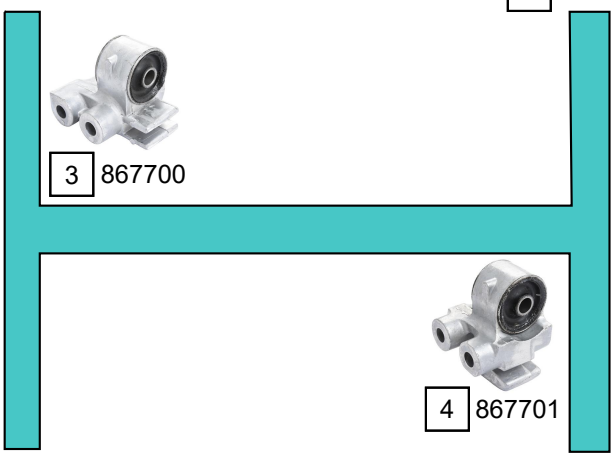

3 867700

4 867701

Ref.	Sidem Ref.	Description	OE-number	Measures	Ref.	Sidem Ref.	Description	OE-number	Measures
1	867501	strut mount	9 461 524	di:13 L:35	3	867700	silentblock for TCA	3 530 202	di:12.5 (*)
2	867304	mounting axle body	3 516 122	di:20.1	4	867701	silentblock for TCA	3 516 496	di:12.5 (*)

Copyright 2021

940 / 960 | 08/1990 - 10/1998

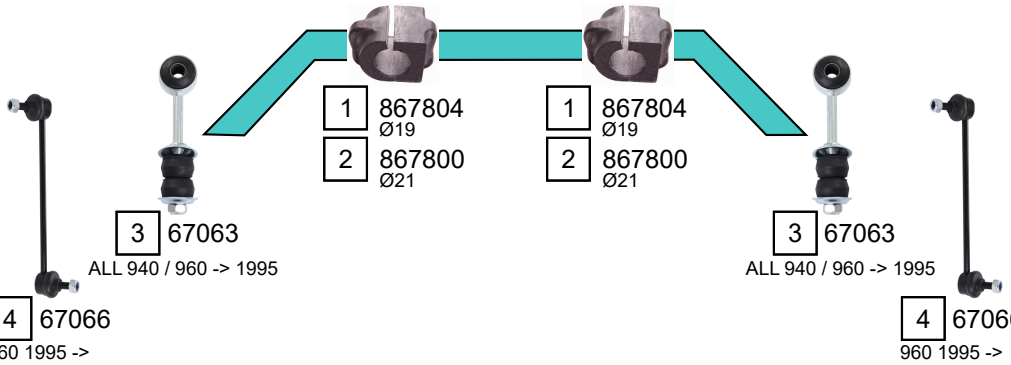

MS 940

5 315.034

MS 960

6 315.133 6 315.133

PS

7 315.134 7 315.134

CAM / TRW -> 1994

8 67132 9 67138 A 9 67138 A 8 67132

ZF

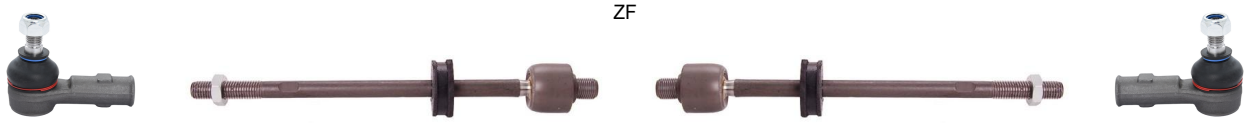

8 67132 10 67010 10 67010 8 67132

TRW 1995 ->

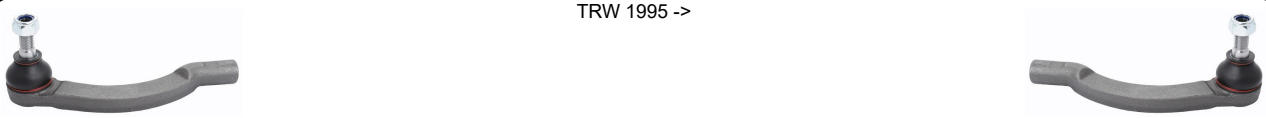

11 67634 12 67635

Ref.	Sidem Ref.	Description	OE-number	Measures	Ref.	Sidem Ref.	Description	OE-number	Measures
1	867804	stabiliser mounting	1 229 389	di:19	7	315.134	steering rack gaiter	9 191 409	D:46 d:13 L:225
2	867800	stabiliser mounting	1 273 184	di:21	8	67132	tie rod end	3 516 944	c:12.8 th:FM14X2R
3	67063	stabiliser link	9 157 725	L:140	9	67138 A	axial joint	9 140 504	th:MM14X1.5R L:292
4	67066	stabiliser link	272 991	L:245	10	67010	axial joint	271 389	th:MM16x1.5R L:293
5	315.034	steering rack gaiter	1 272 924	D:44 d:10 L:185	11	67634	tie rod end left	271 598	c:13.1 th:F M14X2R
6	315.133	steering rack gaiter	271 601	D:49 d:13 L:203	12	67635	tie rod end right	271 599	c:13.1 th:FM14X2R

Copyright 2021

VOLVO
940 - 960

940 / 960 | 08/1990 - 10/1998

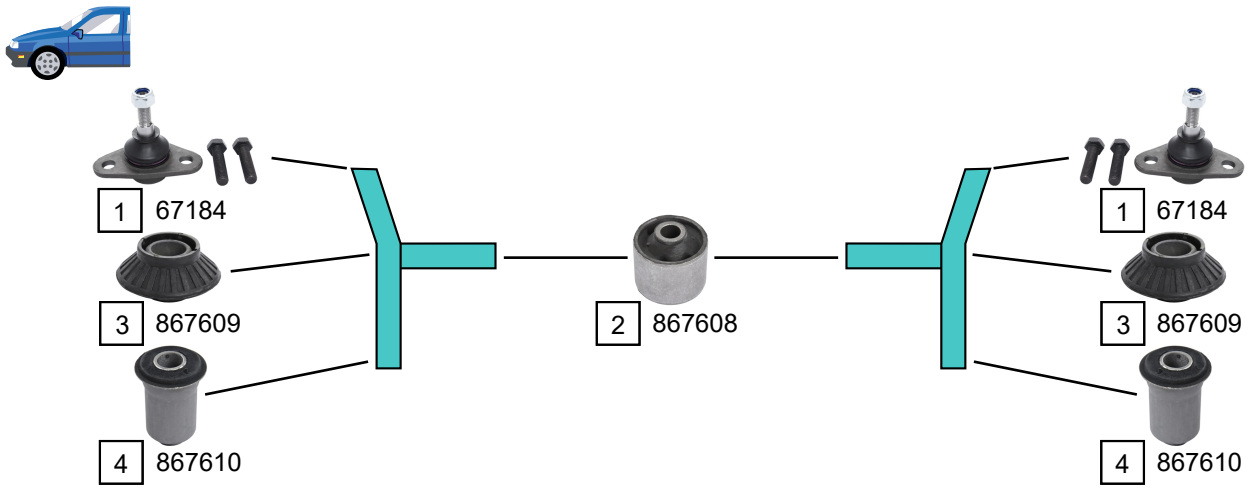

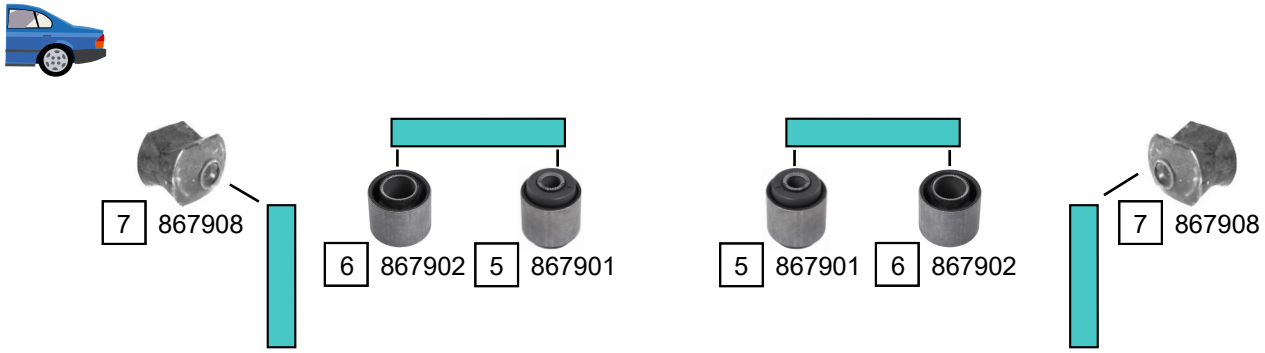

Ref.	Sidem Ref.	Description	OE-number	Measures	Ref.	Sidem Ref.	Description	OE-number	Measures
1	67184	ball joint lower	270 477	c:15.5	5	867901	silentblock for TCA	1 330 973	di:12.2 do:40.2 (*)
2	867608	silentblock for TCA	1 329 655	di:14.2 do:47 (*)	6	867902	silentblock for TCA	1 330 427	di:20.2 do:40.2 (*)
3	867609	silentblock for TCA	1 359 599	di:17 (*)	7	867908	silentblock for TCA	1 272 306	di:14.5 (*)
4	867610	silentblock for TCA	1 273 235	di:12.3 do:37.1 (*)					

Copyright 2021

C30 10/2006 - 12/2012

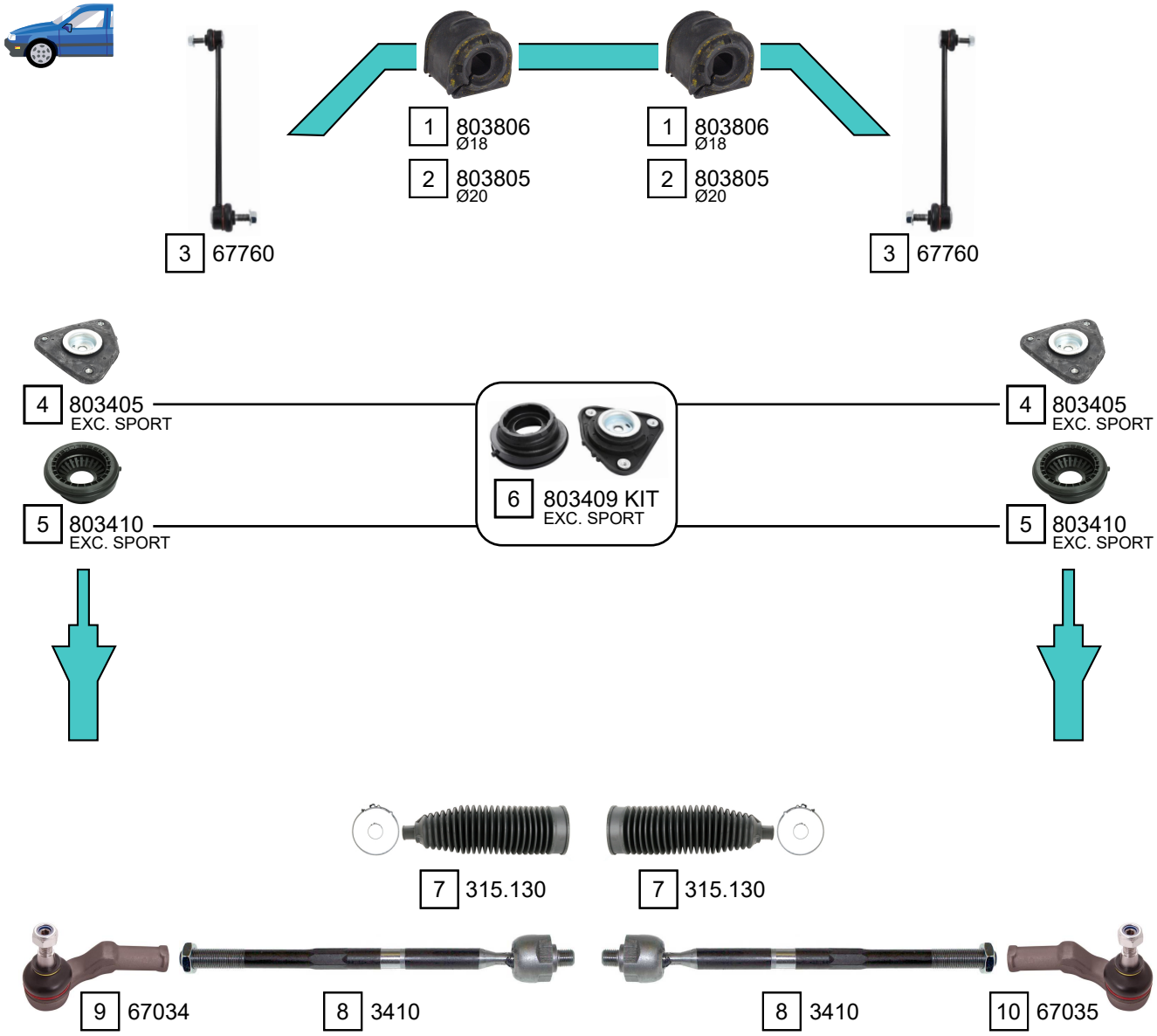

Ref.	Sidem Ref.	Description	OE-number	Measures	Ref.	Sidem Ref.	Description	OE-number	Measures
1	803806	stabiliser mounting	30 748 803	di:17	6	803409 KIT	strut mount kit	30 681 546 S1	di:13 L:59
2	803805	stabiliser mounting	30 666 266	di:18	7	315.130	steering rack gaiter	31 317 782	D:54 d:15 L:206
3	67760	stabiliser link	8 623 576	L:298	8	3410	axial joint	31 201 817	th:MM14X1.5R L:294
4	803405	strut mount	30 681 546	di:13 do:87 L:29	9	67034	tie rod end left	31 201 413	c:12.3 th:FM16X1.5R
5	803410	bearing	31 262 470	di:35 do:107 L:44	10	67035	tie rod end right	31 201 412	c:12.3 th:FM16X1.5R

Copyright 2021

VOLVO
C30

C30 10/2006 - 12/2012

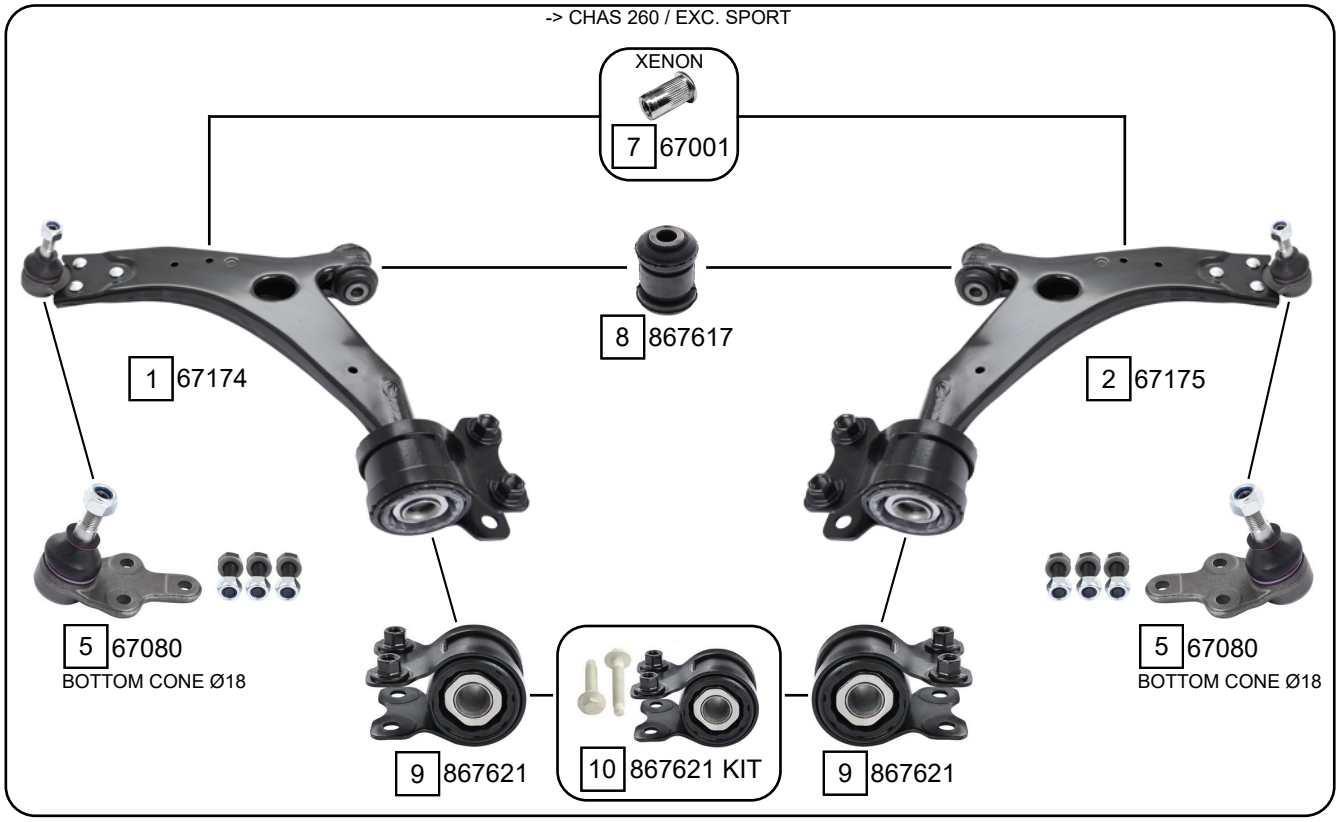

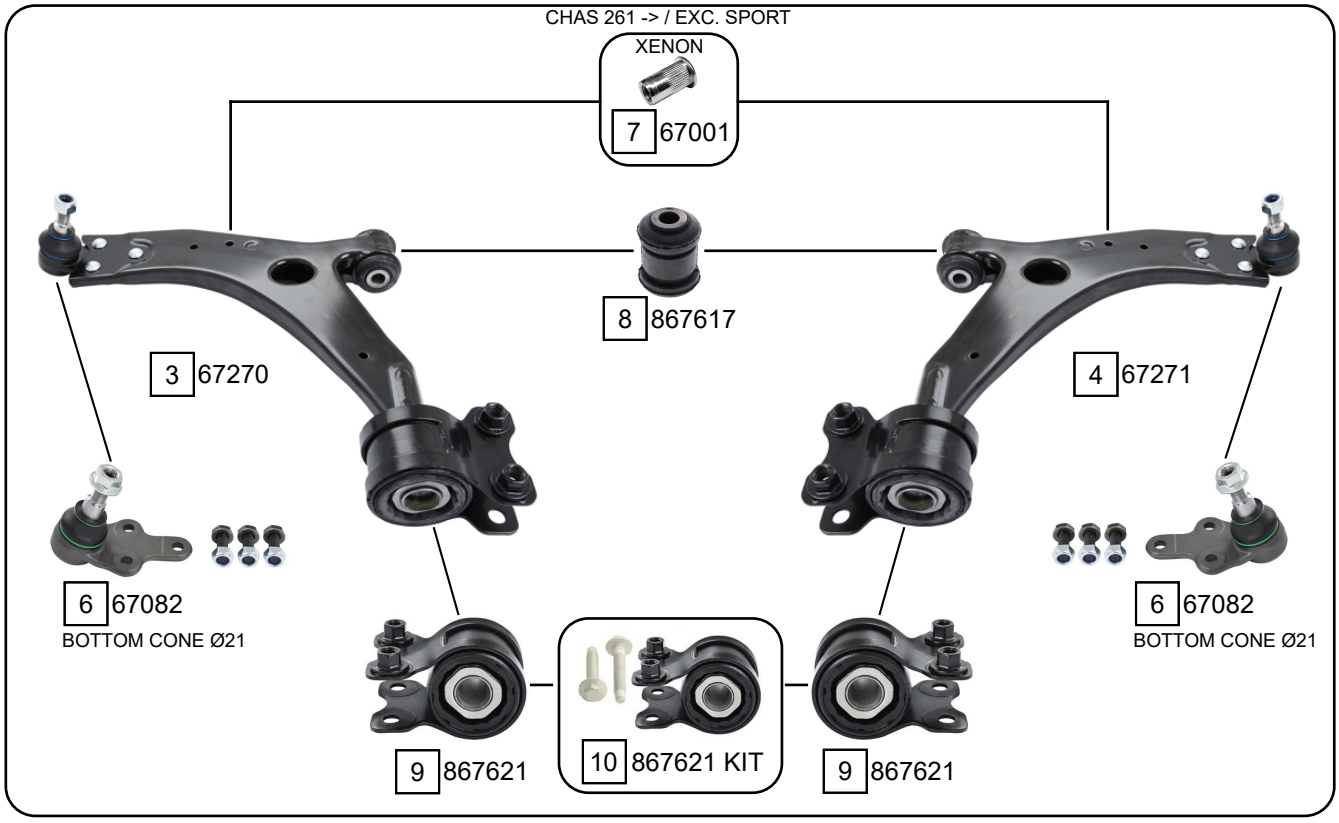

Ref.	Sidem Ref.	Description	OE-number	Measures	Ref.	Sidem Ref.	Description	OE-number	Measures
1	67174	TCA left wbj	31 277 464	c:15	6	67082	ball joint	Part of	c:18
2	67175	TCA right wbj	31 277 465	c:15	7	67001	mounting kit	999362	L:17
3	67270	TCA left wbj	31 277 463	c:18	8	867617	silentblock for TCA	Part of	di:14.2 do:40.5 (*)
4	67271	TCA right wbj	31 277 462	c:18	9	867621	silentblock for TCA	Part of	di:22 (*)
5	67080	ball joint	Part of	c:15	10	867621 KIT	silentblock kit	Part of	

Copyright 2021

VOLVO
C30

C30 | 10/2006 - 12/2012

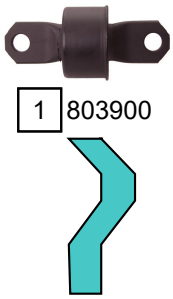

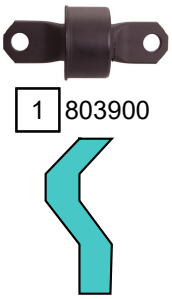

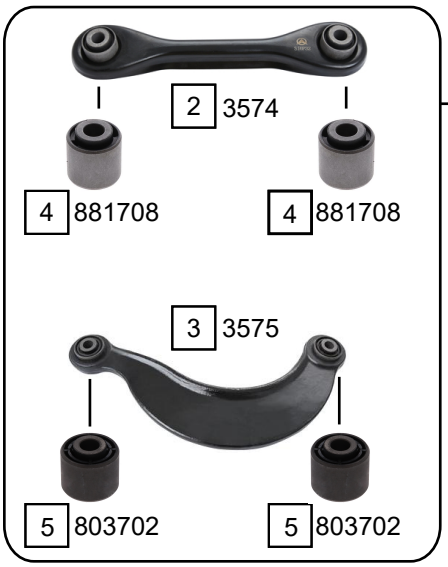

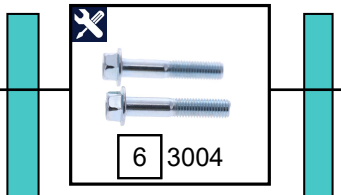

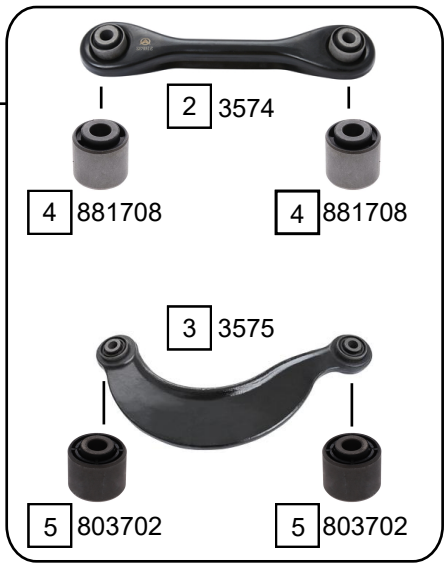

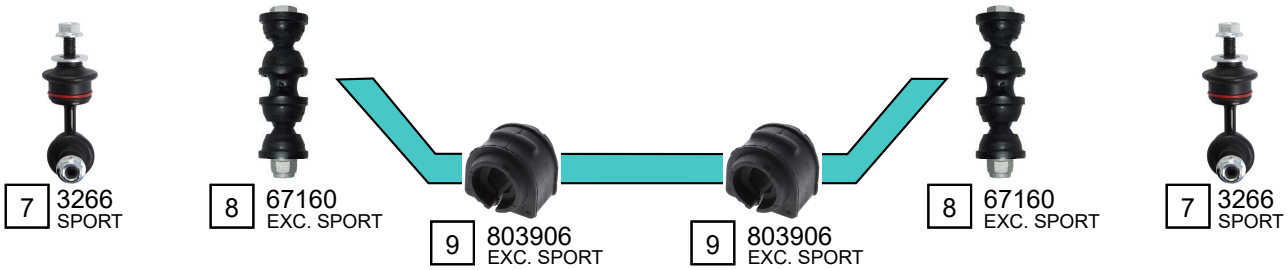

Ref.	Sidem Ref.	Description	OE-number	Measures	Ref.	Sidem Ref.	Description	OE-number	Measures
1	803900	mounting axle body	30 666 821	di:14.1 do:60.2	6	3004	mounting kit	999 259	th:M12x1.75R L:76
2	3574	track rod	30 683 067	L:223	7	3266	stabiliser link rear axle	31 212 548	L:77
3	3575	track rod	8 671 921	L:288	8	67160	stabiliser link rear axle	30 760 238	L:109
4	881708	silentblock for TCA	Part of	di:12.1 do:32.3 (*)	9	803906	stabiliser mounting	31 317 946	di:17
5	803702	silentblock for TCA	Part of	di:11.8 do:36.2 (*)					

Copyright 2021

VOLVO
S40 - V40

S40 / V40 (VS-VW) 01/1997 - 01/2001

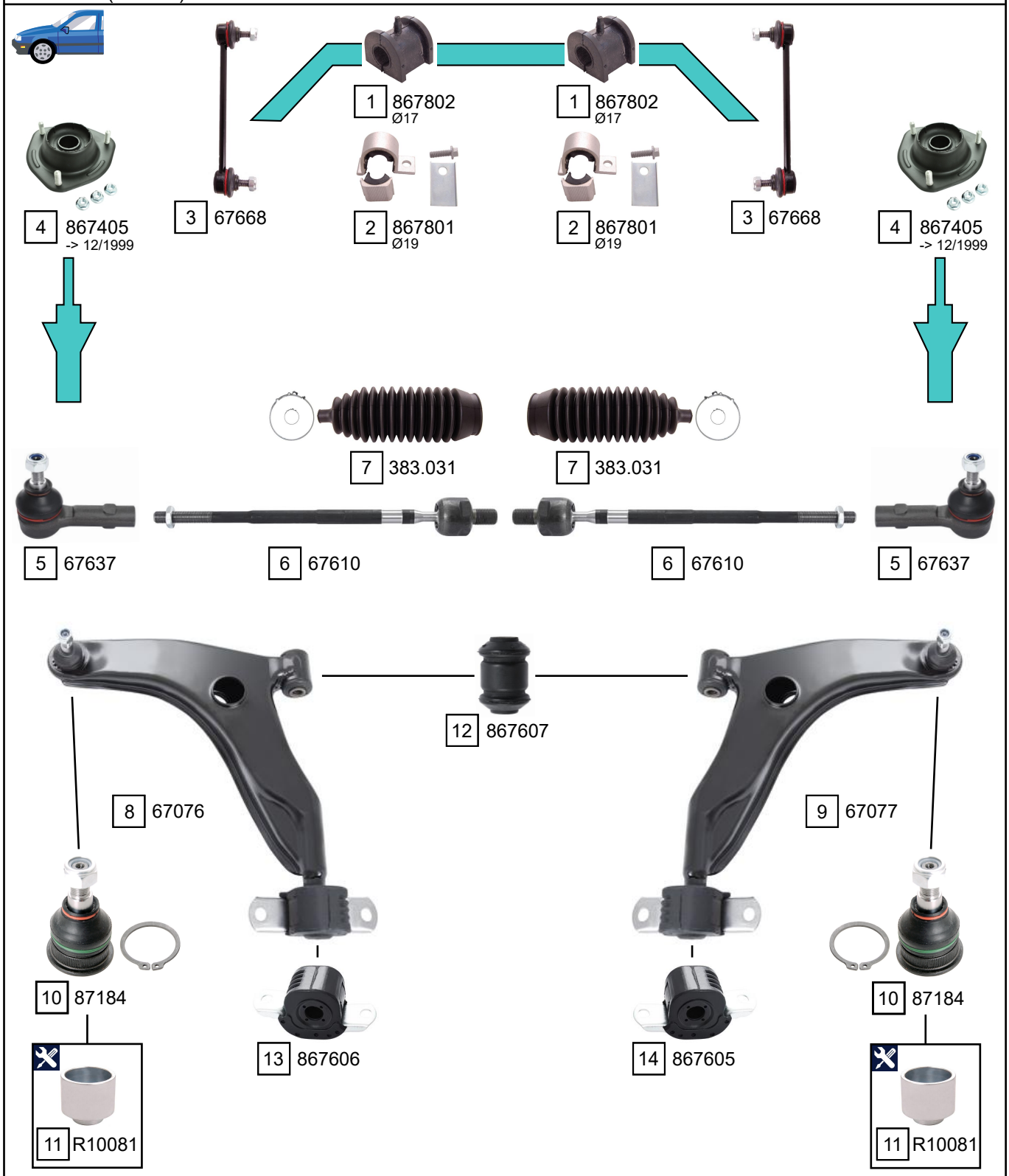

Ref.	Sidem Ref.	Description	OE-number	Measures	Ref.	Sidem Ref.	Description	OE-number	Measures
1	867802	stabiliser mounting	30 884 518	di:16.5	8	67076	TCA left wbj	30 887 025	c:15
2	867801	stabiliser mounting kit	30 620 990 S1	di:18	9	67077	TCA right wbj	30 864 209	c:15
3	67668	stabiliser link	30 884 358	L:200	10	87184	ball joint	Part of	c:15 do:40
4	867405	strut mount	30 818 465	di:15 L:59	11	R10081	mounting tool ring ø50 ø42	Ø 42	di:42 do:50
5	67637	tie rod end	30 875 012	c:13.4 th:FM12X1.25R	12	867607	silentblock for TCA	30 818 467	di:12 do:37 (*)
6	67610	axial joint	3 345 797	th:MM16X1.5R L:304.5	13	867606	silentblock for TCA	30 872 510	di:20.5 (*)
7	383.031	steering rack gaiter	3 345 796	D:43 d:11 L:188	14	867605	silentblock for TCA	30 872 511	di:20.5 (*)

Copyright 2021

S40 / V40 (VS-VW) 01/1997 - 01/2001

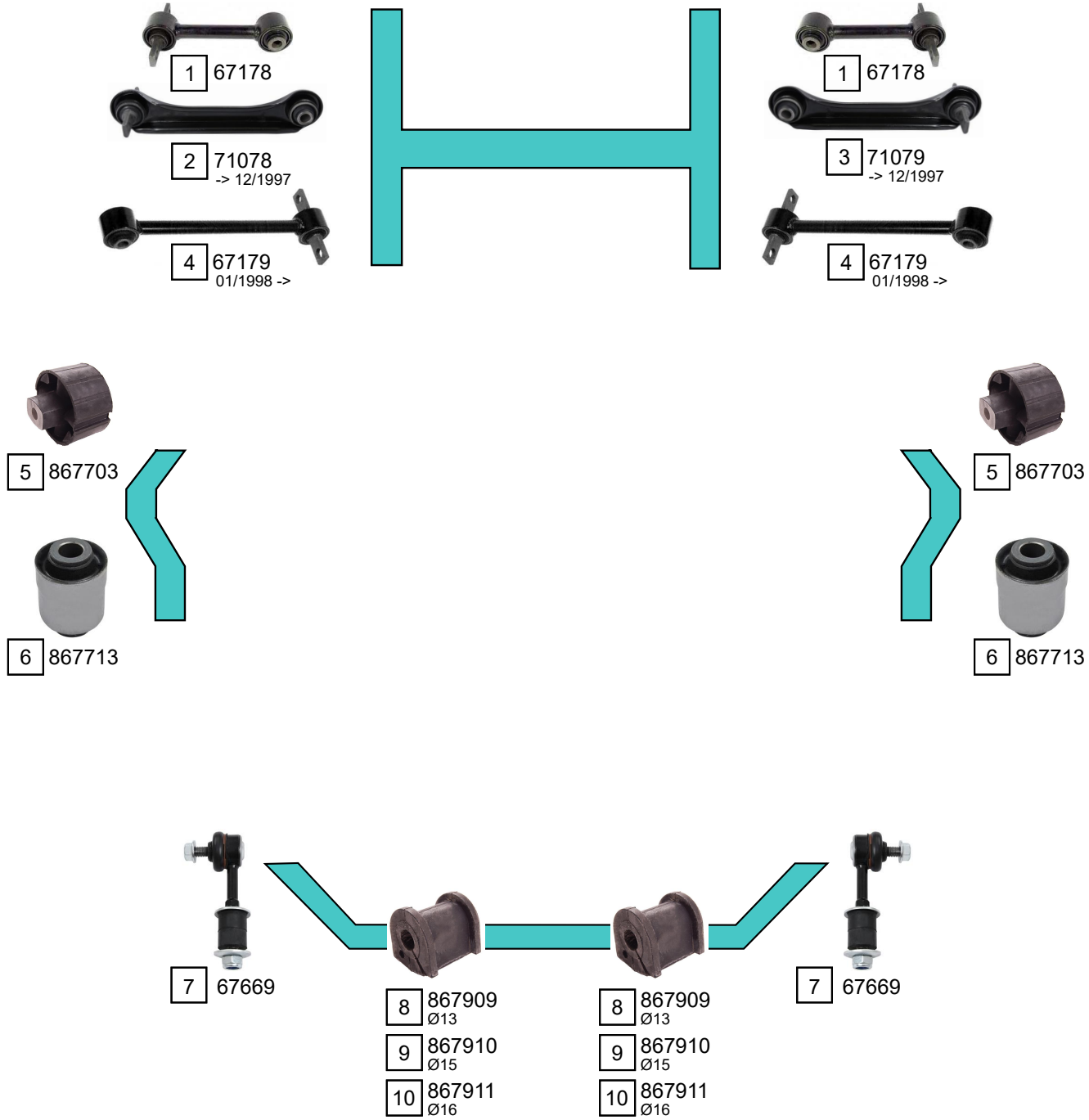

Ref.	Sidem Ref.	Description	OE-number	Measures	Ref.	Sidem Ref.	Description	OE-number	Measures
1	67178	TCA	30 620 785	L:143	6	867713	silentblock for TCA	30 620 972	di:12.3 do:36.2 (*)
2	71078	TCA left	30 818 096	L:225	7	67669	stabiliser link rear axle	30 884 359	L:108
3	71079	TCA right	30 818 097	L:225	8	867909	stabiliser mounting	30 616 985	di:12.5
4	67179	TCA	30 620 786	L:259	9	867910	stabiliser mounting	30 875 788	di:14.5
5	867703	silentblock for TCA	30 851 257	di:12.1 do:77 (*)	10	867911	stabiliser mounting	30 875 457	di:15.5

Copyright 2021

VOLVO
S40 - V40

S40 / V40 (VS-VW) 01/2001 - 01/2004

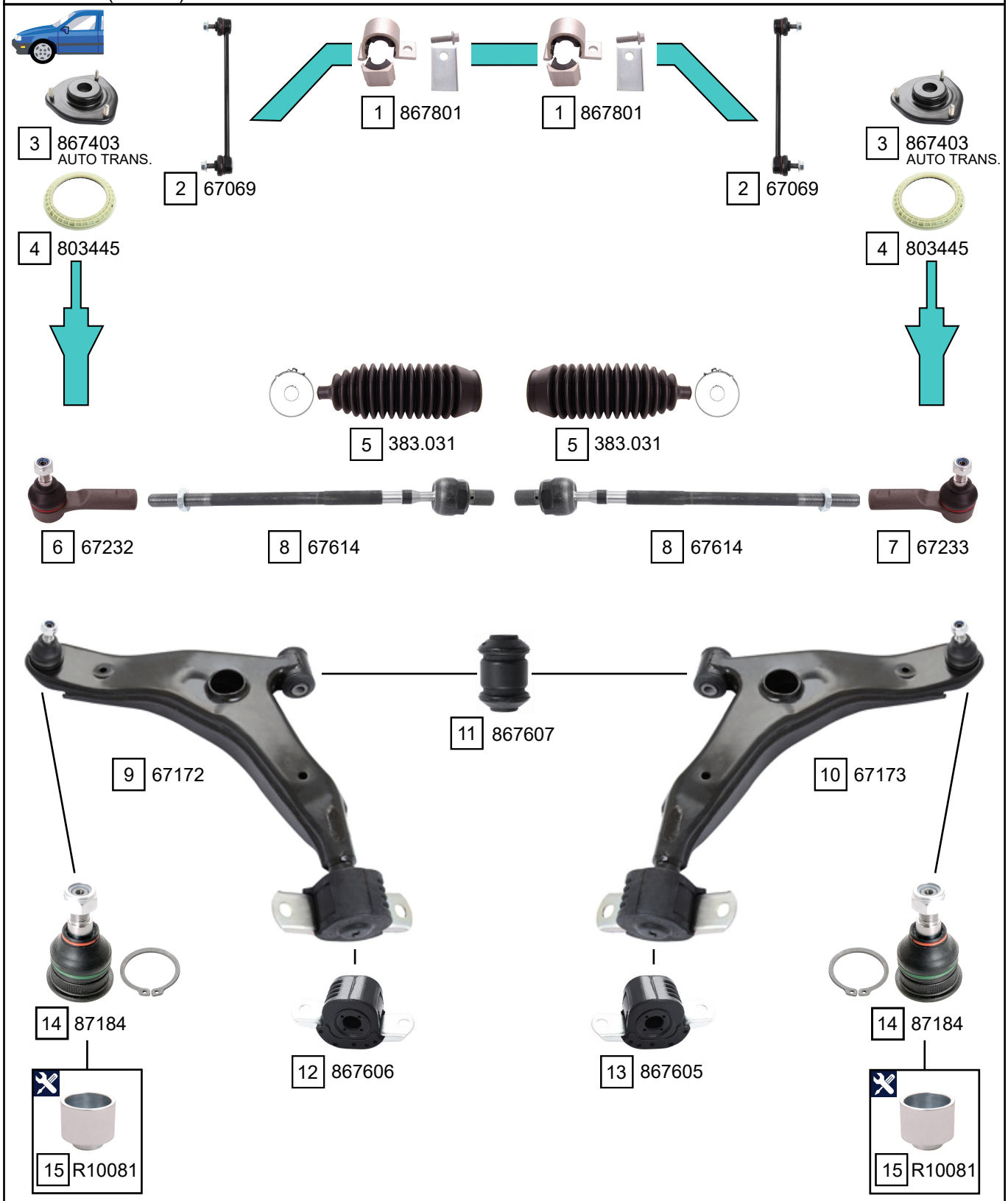

Ref.	Sidem Ref.	Description	OE-number	Measures	Ref.	Sidem Ref.	Description	OE-number	Measures
1	867801	stabiliser mounting kit	30 620 990 S1	di:18	9	67172	TCA left wbj	30 887 653	c:15
2	67069	stabiliser link	30 884 179	L:268	10	67173	TCA right wbj	30 887 654	c:15
3	867403	strut mount	30 616 824	di:12.2 L:34	11	867607	silentblock for TCA	30 818 467	di:12 do:37 (*)
4	803445	bearing	30 616 825	di:85.5 do:117.5 L:12.4	12	867606	silentblock for TCA	30 872 510	di:20.5 (*)
5	383.031	steering rack gaiter	3 345 796	D:43 d:11 L:188	13	867605	silentblock for TCA	30 872 511	di:20.5 (*)
6	67232	tie rod end left	274 225	c:13.3 th:FM14X1.5R	14	87184	ball joint	Part of	c:15 do:40
7	67233	tie rod end right	274 226	c:13.3 th:FM14X1.5R	15	R10081	mounting tool ring ø50 ø42	Ø 42	di:42 do:50
8	67614	axial joint	274 224	th:MM16X1.5R L:319					

Copyright 2021

VOLVO
S40 - V40

S40 / V40 (VS-VW) 01/2001 - 01/2004

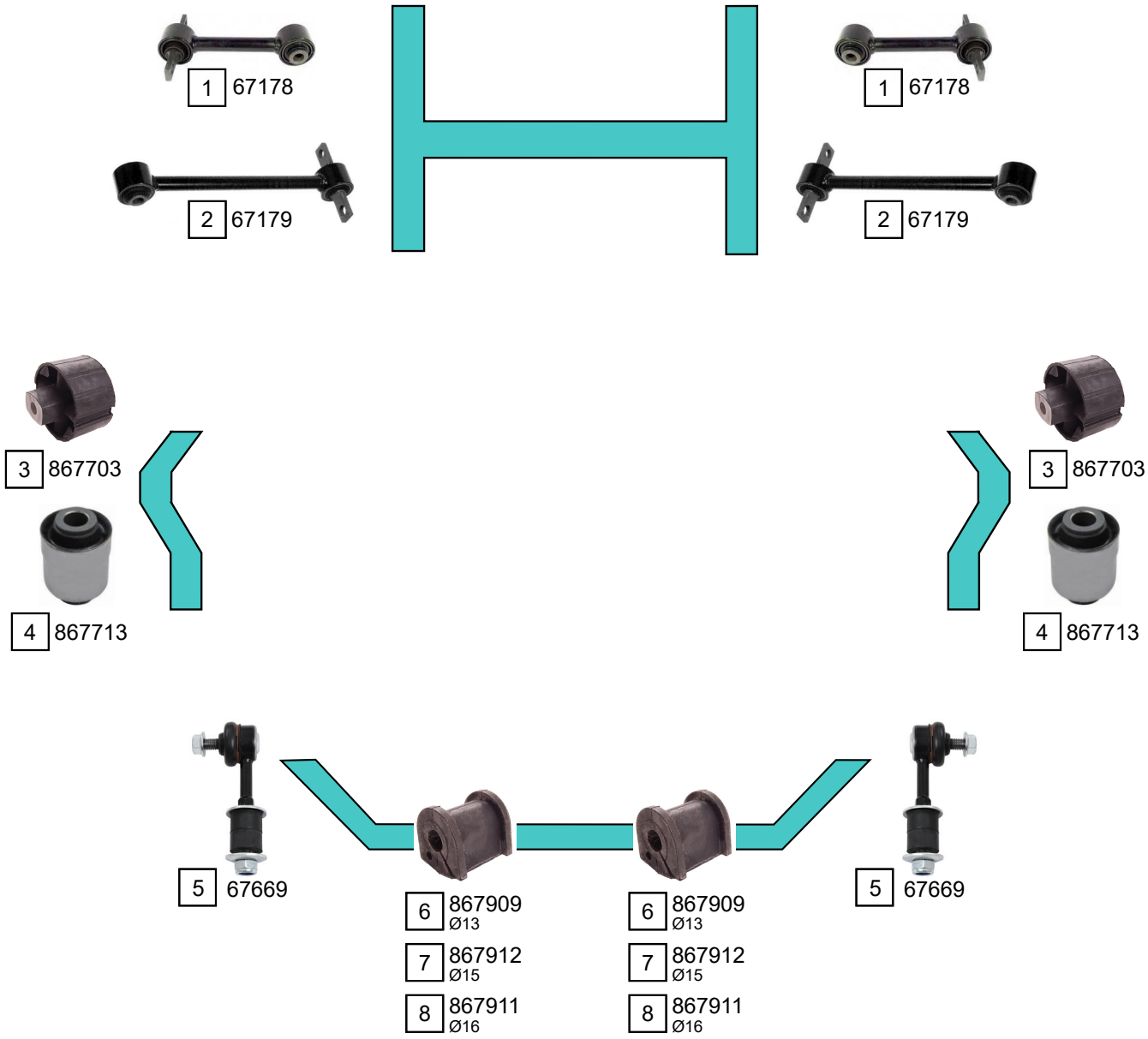

Ref.	Sidem Ref.	Description	OE-number	Measures	Ref.	Sidem Ref.	Description	OE-number	Measures
1	67178	TCA	30 620 785	L:143	5	67669	stabiliser link rear axle	30 884 359	L:108
2	67179	TCA	30 620 786	L:259	6	867909	stabiliser mounting	30 616 985	di:12.5
3	867703	silentblock for TCA	30 851 257	di:12.1 do:77 (*)	7	867912	stabiliser mounting	30 616 986	di:14.5
4	867713	silentblock for TCA	30 620 972	di:12.3 do:36.2 (*)	8	867911	stabiliser mounting	30 875 457	di:15.5

Copyright 2021

VOLVO
S40 - V50

S40 (MS) 01/2004 - 05/2012
V50 (MW) 04/2004 - 05/2012

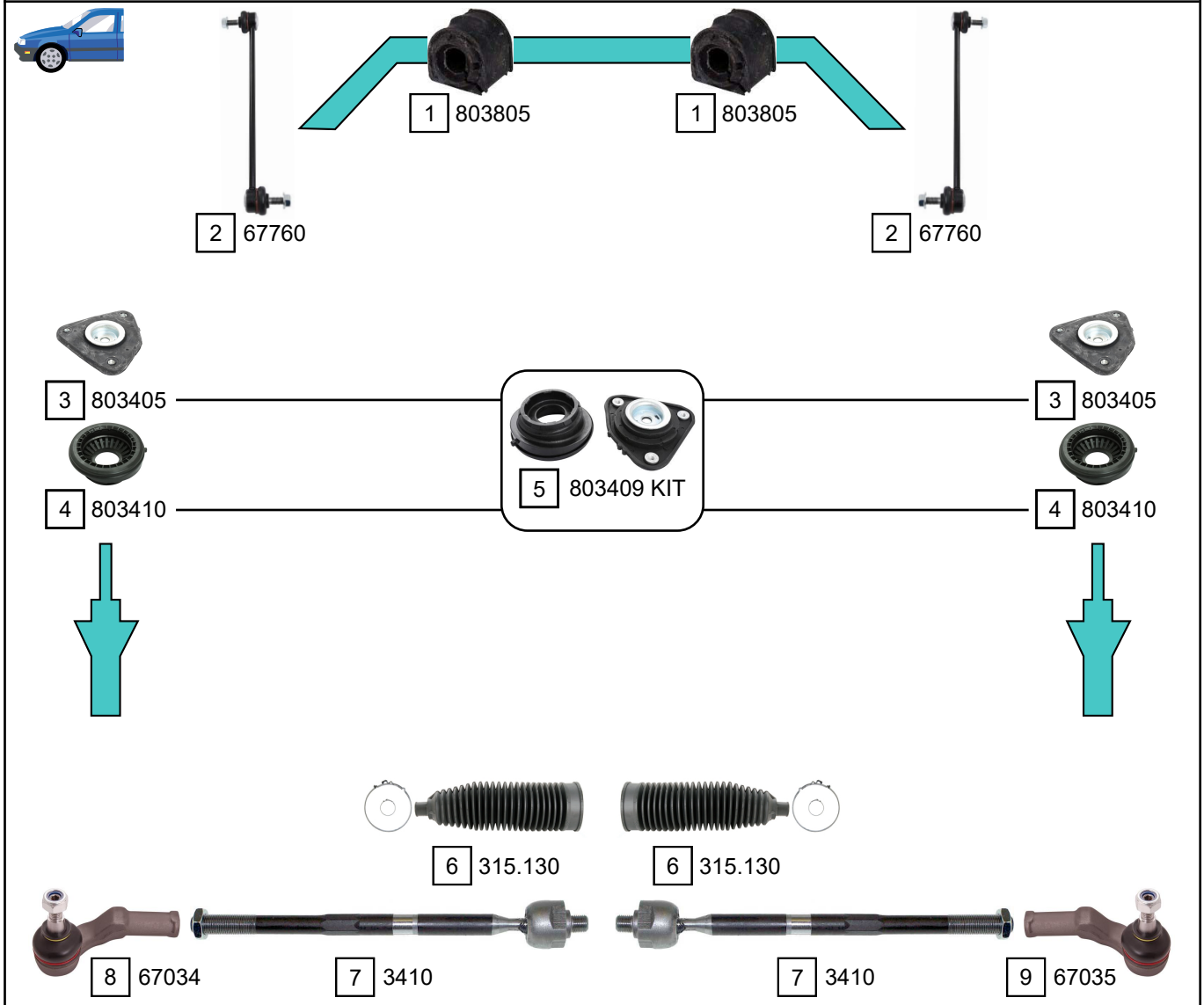

Ref.	Sidem Ref.	Description	OE-number	Measures	Ref.	Sidem Ref.	Description	OE-number	Measures
1	803805	stabiliser mounting	30 666 266	di:18	6	315.130	steering rack gaiter	31 317 782	D:54 d:15 L:206
2	67760	stabiliser link	8 623 576	L:298	7	3410	axial joint	31 201 817	th:MM14X1.5R L:294
3	803405	strut mount	30 681 546	di:13 do:87 L:29	8	67034	tie rod end left	31 201 413	c:12.3 th:FM16X1.5R
4	803410	bearing	31 262 470	di:35 do:107 L:44	9	67035	tie rod end right	31 201 412	c:12.3 th:FM16X1.5R
5	803409 KIT	strut mount kit	30 681 546 S1	di:13 L:59					

Copyright 2021

S40 (MS) 01/2004 - 05/2012
V50 (MW) 04/2004 - 05/2012

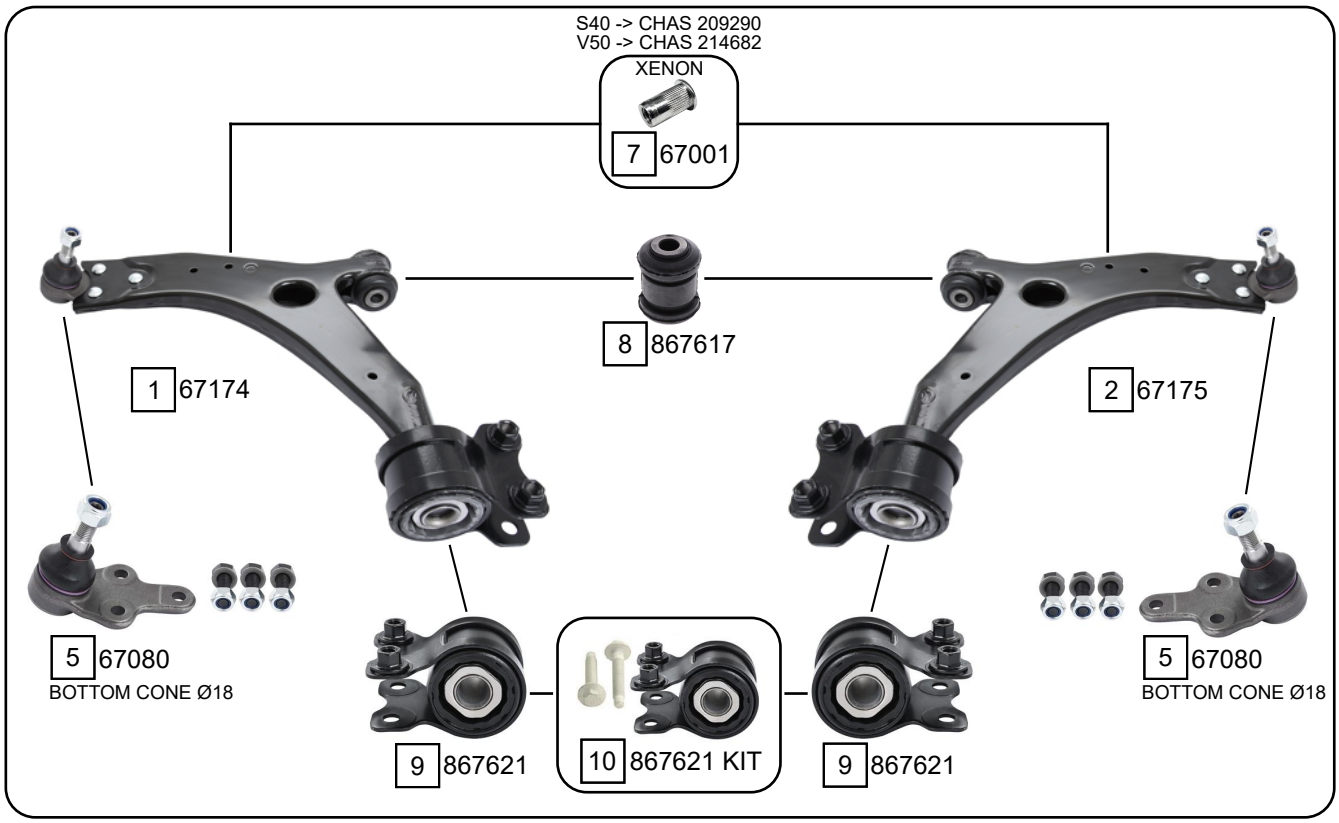

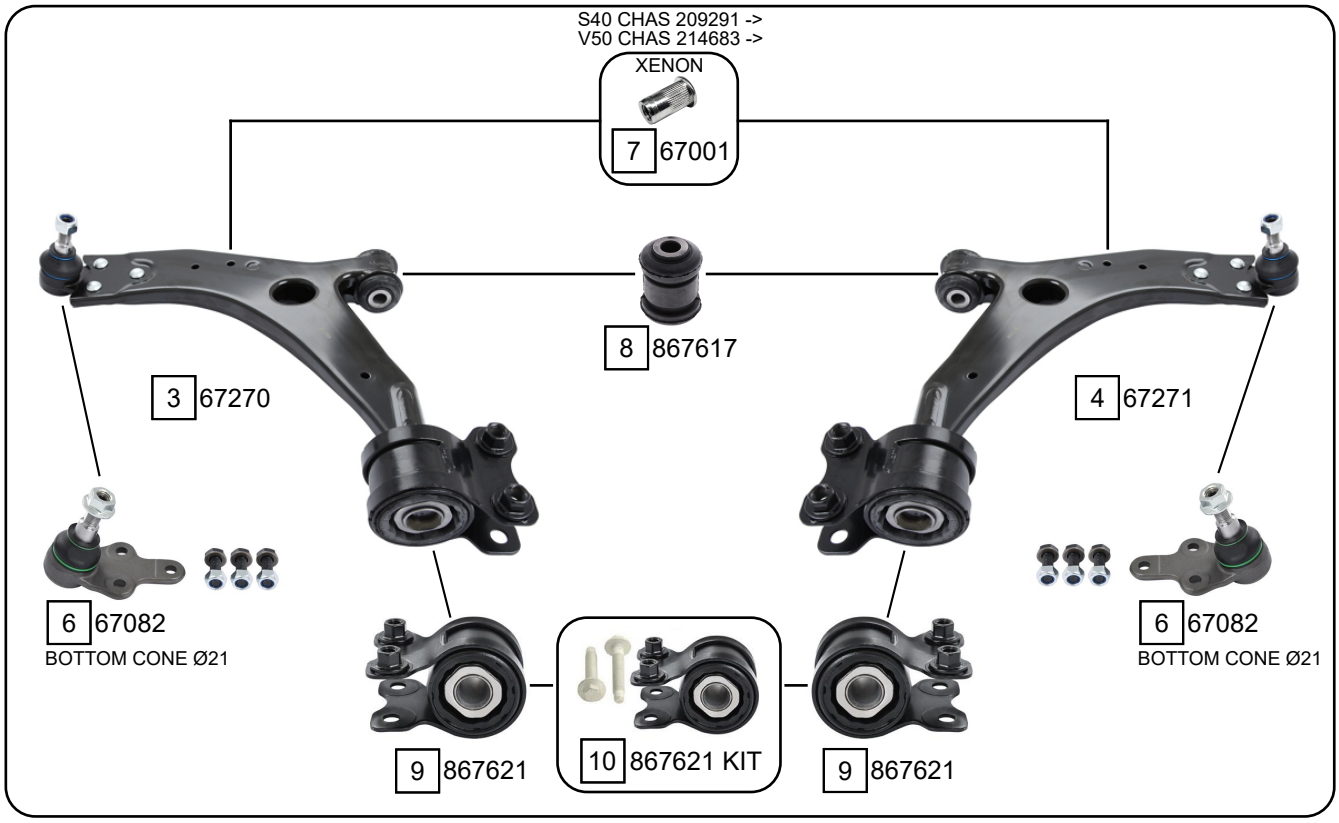

Ref.	Sidem Ref.	Description	OE-number	Measures	Ref.	Sidem Ref.	Description	OE-number	Measures
1	67174	TCA left wbj	31 277 464	c:15	6	67082	ball joint	Part of	c:18
2	67175	TCA right wbj	31 277 465	c:15	7	67001	mounting kit	999362	L:17
3	67270	TCA left wbj	31 277 463	c:18	8	867617	silentblock for TCA	Part of	di:14.2 do:40.5 (*)
4	67271	TCA right wbj	31 277 462	c:18	9	867621	silentblock for TCA	Part of	di:22 (*)
5	67080	ball joint	Part of	c:15	10	867621 KIT	silentblock kit	Part of	

Copyright 2021

VOLVO
S40 - V50

S40 (MS) 01/2004 - 05/2012
V50 (MW) 04/2004 - 05/2012

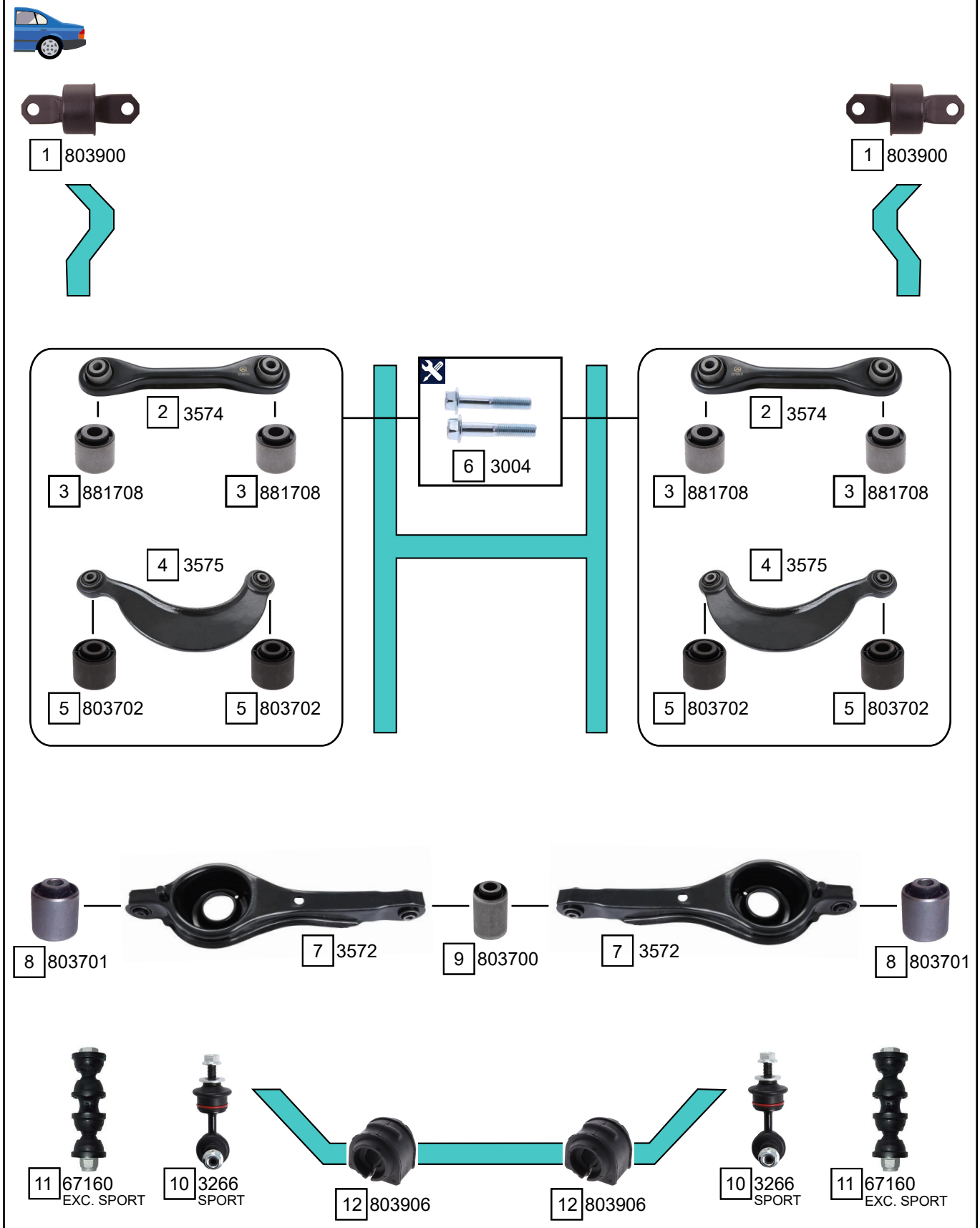

Ref.	Sidem Ref.	Description	OE-number	Measures	Ref.	Sidem Ref.	Description	OE-number	Measures
1	803900	mounting axle body	30 666 821	di:14.1 do:60.2	7	3572	TCA	30 666 105	
2	3574	track rod	30 683 067	L:223	8	803701	silentblock for TCA	Part of	di:12.1 do:36.3 (*)
3	881708	silentblock for TCA	Part of	di:12.1 do:32.3 (*)	9	803700	silentblock for TCA	Part of	di:12.1 do:32.4 (*)
4	3575	track rod	8 671 921	L:288	10	3266	stabiliser link rear axle	31 212 548	L:77
5	803702	silentblock for TCA	Part of	di:11.8 do:36.2 (*)	11	67160	stabiliser link rear axle	30 760 238	L:109
6	3004	mounting kit	999 259	th:M12x1.75R L:76	12	803906	stabiliser mounting	31 317 946	di:17

Copyright 2021

V40 03/2012 ->

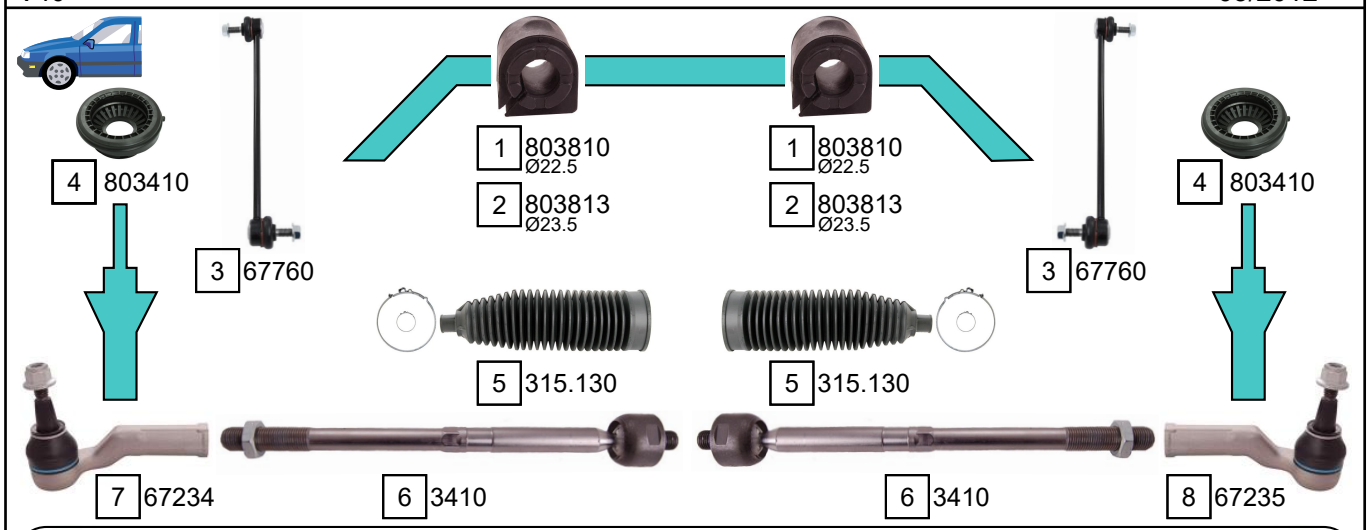

SHEET METAL / EXC. DE-DK-FI-NO-SE

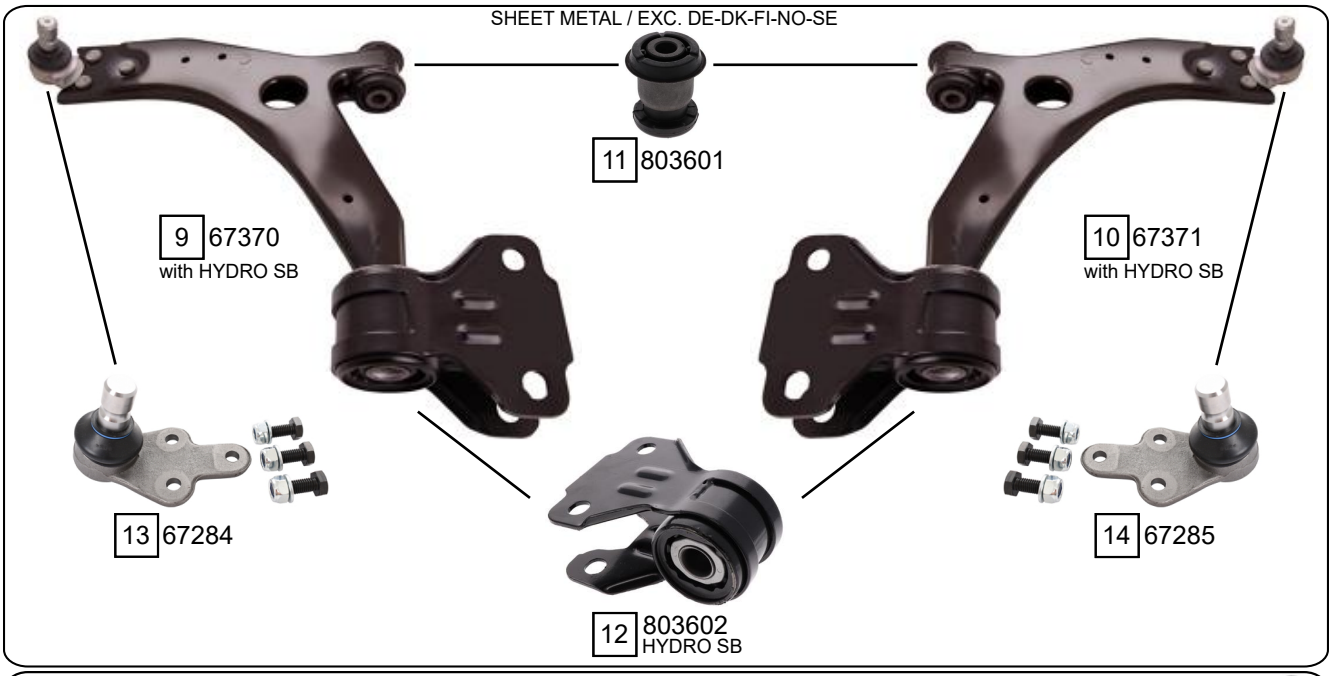

ALU / DE-DK-FI-NO-SE

Ref.	Sidem Ref.	Description	OE-number	Measures	Ref.	Sidem Ref.	Description	OE-number	Measures
1	803810	stabiliser mounting	31 317 247	di:22.5	10	67371	TCA right wbj	31 340 231	c:21
2	803813	stabiliser mounting	31 317 248	di:23.5	11	803601	silentblock for TCA	Part of	di:14.1 do:38 (*)
3	67760	stabiliser link	8 623 576	L:298	12	803602	silentblock for TCA	Part of	di:22 (*)
4	803410	bearing	31 262 470	di:35 do:107 L:44	13	67284	ball joint left	Part of	c:21
5	315.130	steering rack gaiter	31 317 782	D:54 d:15 L:206	14	67285	ball joint right	Part of	c:21
6	3410	axial joint	31 201 817	th:MM14X1.5R L:294	15	67372	TCA left wbj	31 277 620	c:21
7	67234	tie rod end left	31 317 781	c:11.2 th:FM16X1.5R	16	67373	TCA right wbj	31 317 251	c:21
8	67235	tie rod end right	31 317 819	c:11.2 th:FM16X1.5R	17	803604	silentblock for TCA left	Part of	di:20.8 do:20.8 (*)
9	67370	TCA left wbj	31 340 232	c:21	18	803605	silentblock for TCA right	Part of	di:20.8 do:20.8 (*)

Copyright 2021

VOLVO
V40

V40 03/2012 ->

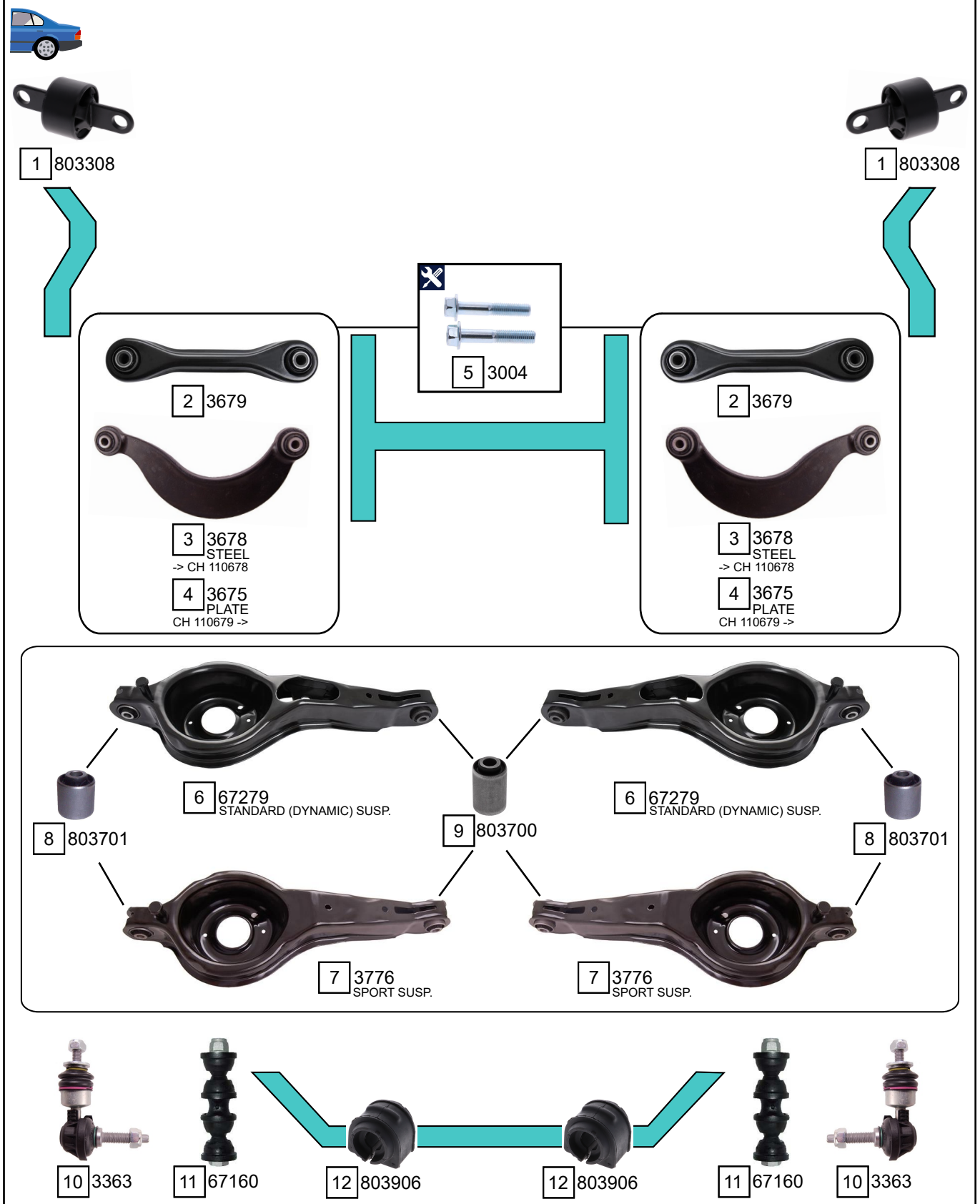

Ref.	Sidem Ref.	Description	OE-number	Measures	Ref.	Sidem Ref.	Description	OE-number	Measures
1	803308	mounting axle body	31 360 092	do:60.2	7	3776	TCA	31 387 062	
2	3679	track rod	31 277 675	L:223	8	803701	silentblock for TCA	Part of	di:12.1 do:36.3 (*)
3	3678	track rod	31 317 267	L:286	9	803700	silentblock for TCA	Part of	di:12.1 do:32.4 (*)
4	3675	track rod	31 406 582	L:286	10	3363	stabiliser link rear axle	31 317 271	L:76
5	3004	mounting kit	999 259	th:M12x1.75R L:76	11	67160	stabiliser link rear axle	30 760 238	L:109
6	67279	TCA	31 387 063		12	803906	stabiliser mounting	31 317 946	di:17

Copyright 2021

V40 CROSS COUNTRY 02/2013 ->

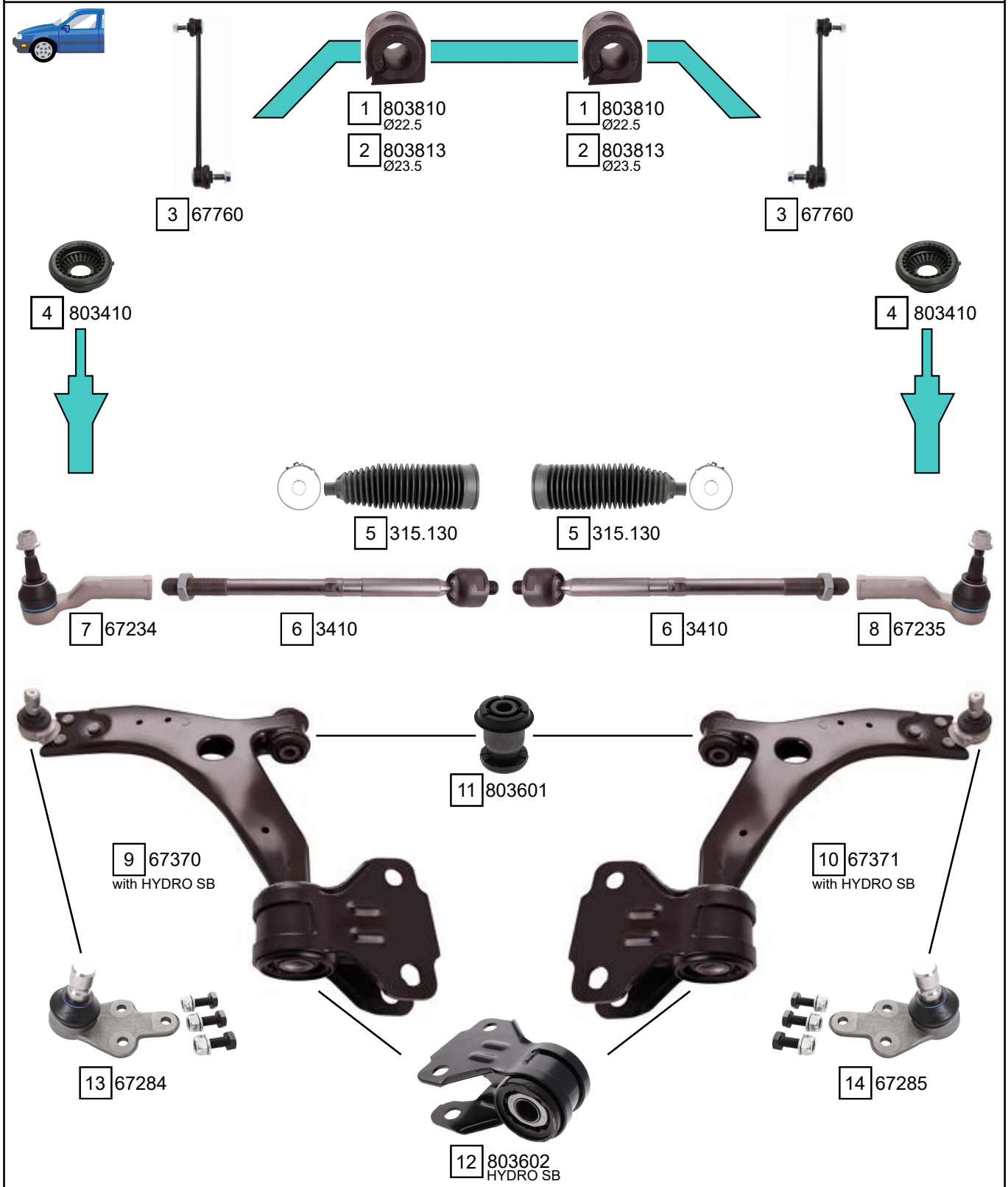

Ref.	Sidem Ref.	Description	OE-number	Measures	Ref.	Sidem Ref.	Description	OE-number	Measures
1	803810	stabiliser mounting	31 317 247	di:22.5	8	67235	tie rod end right	31 317 819	c:11.2 th:FM16X1.5R
2	803813	stabiliser mounting	31 317 248	di:23.5	9	67370	TCA left wbj	31 340 232	c:21
3	67760	stabiliser link	8 623 576	L:298	10	67371	TCA right wbj	31 340 231	c:21
4	803410	bearing	31 262 470	di:35 do:107 L:44	11	803601	silentblock for TCA	Part of	di:14.1 do:38 (*)
5	315.130	steering rack gaiter	31 317 782	D:54 d:15 L:206	12	803602	silentblock for TCA	Part of	di:22 (*)
6	3410	axial joint	31 201 817	th:MM14X1.5R L:294	13	67284	ball joint left	Part of	c:21
7	67234	tie rod end left	31 317 781	c:11.2 th:FM16X1.5R	14	67285	ball joint right	Part of	c:21

Copyright 2021

VOLVO
V40

V40 CROSS COUNTRY 02/2013 ->

1 803308

1 803308

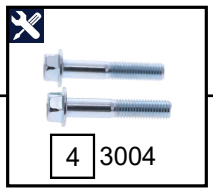

4 3004

2 3679

3 3678

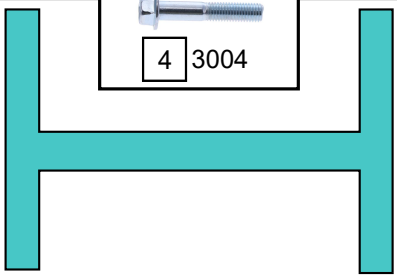

2 3679

3 3678

6 803701

5 67474

7 803700

5 67474

6 803701

8 3363

9 67160

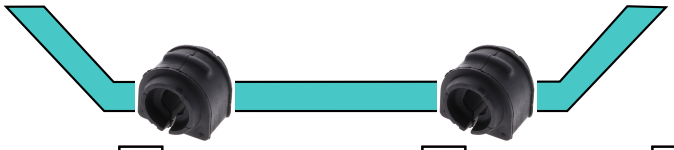

10 803906

10 803906

9 67160

8 3363

Ref.	Sidem Ref.	Description	OE-number	Measures	Ref.	Sidem Ref.	Description	OE-number	Measures
1	803308	mounting axle body	31 360 092	do:60.2	6	803701	silentblock for TCA	Part of	di:12.1 do:36.3 (*)
2	3679	track rod	31 277 675	L:223	7	803700	silentblock for TCA	Part of	di:12.1 do:32.4 (*)
3	3678	track rod	31 317 267	L:286	8	3363	stabiliser link rear axle	31 317 271	L:76
4	3004	mounting kit	999 259	th:M12x1.75R L:76	9	67160	stabiliser link rear axle	30 760 238	L:109
5	67474	TCA	31 317 266		10	803906	stabiliser mounting	31 317 946	di:17

Copyright 2021

VOLVO
S60

S60 — 01/2000 - 04/2010

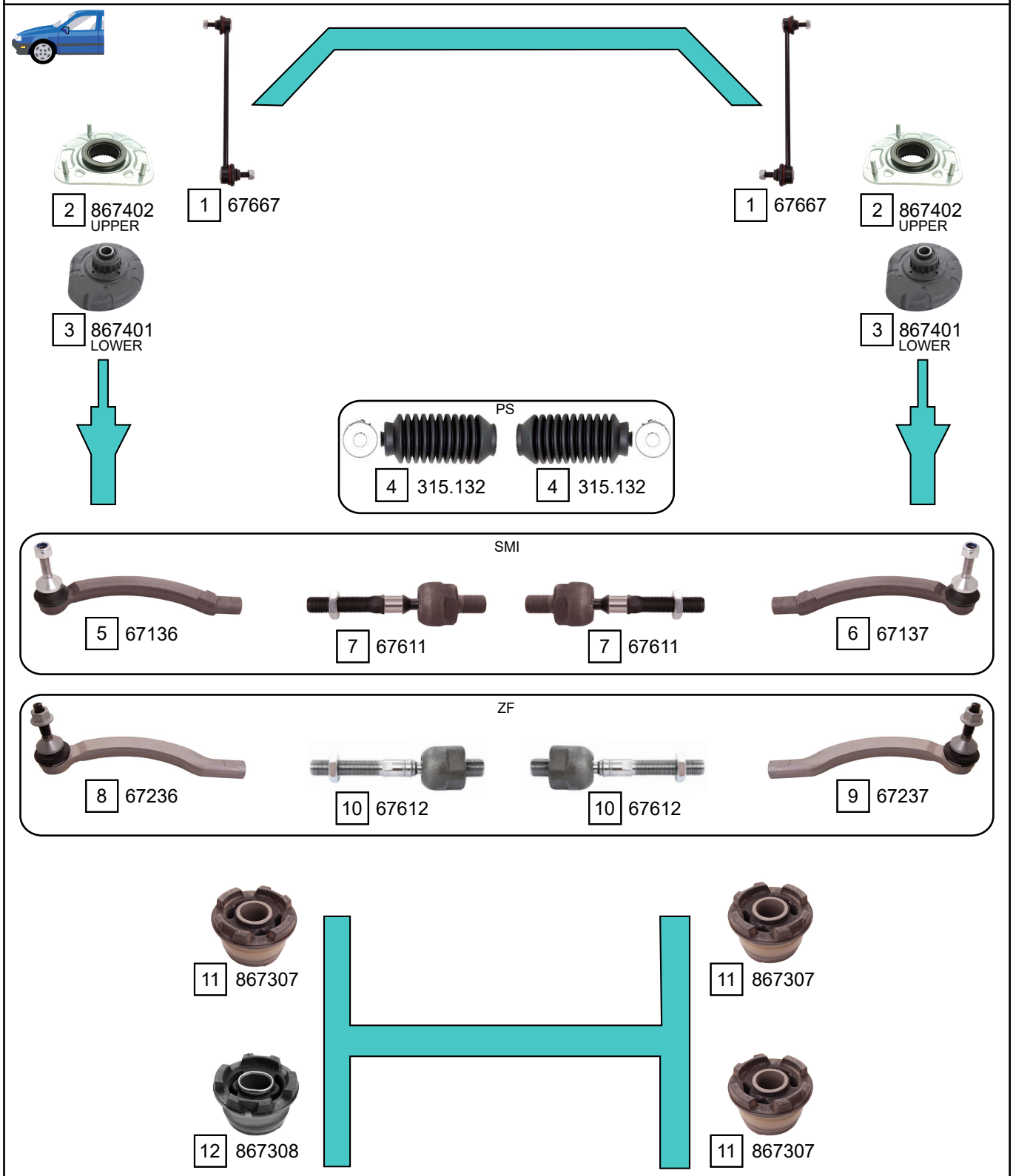

Ref.	Sidem Ref.	Description	OE-number	Measures	Ref.	Sidem Ref.	Description	OE-number	Measures
1	67667	stabiliser link	31 201 602	L:332	7	67611	axial joint	274 179	th:MM16X1.5R L:125
2	867402	strut mount	30 714 968	di:45.3 L:27.8	8	67236	tie rod end left	30 761 719	c:12 th:FM14X1.5R
3	867401	strut mount	30 683 637	di:16.5 do:144 L:55	9	67237	tie rod end right	30 761 718	c:12 th:FM14X1.5R
4	315.132	steering rack gaiter	272 418	D:50 d:14 L:204	10	67612	axial joint	274 353	th:MM16x1.5R L:126
5	67136	tie rod end left	274 175	c:12 th:FM14X1.5R	11	867307	mounting axle body	3 507 923	di:25.6 do:71.7
6	67137	tie rod end right	274 176	c:12 th:FM14X1.5R	12	867308	mounting axle body	3 507 924	di:24.4 do:74

Copyright 2021

VOLVO
S60

S60 | 01/2000 - 04/2010

-> CHAS 626501

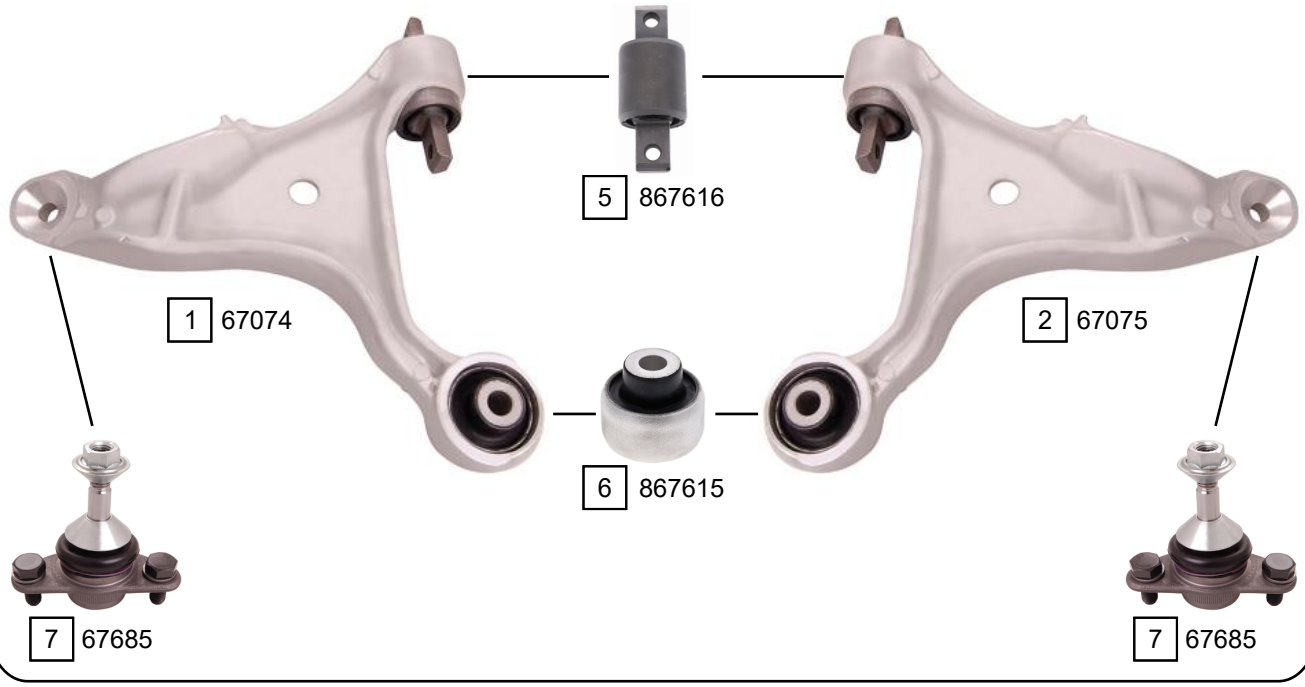

CHAS 626502 ->

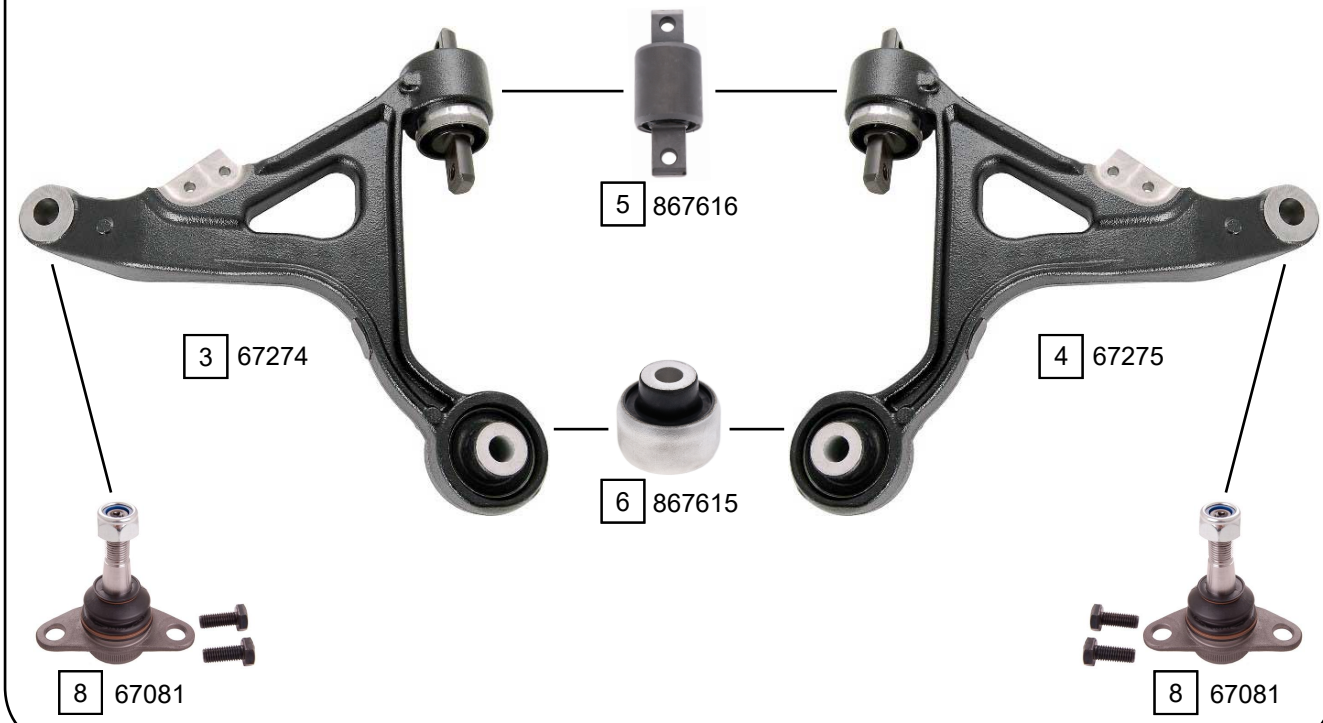

Ref.	Sidem Ref.	Description	OE-number	Measures	Ref.	Sidem Ref.	Description	OE-number	Measures
1	67074	TCA left wobj	30 635 229	c:13.8	5	867616	silentblock for TCA	9 465 971	do:48.3 (*)
2	67075	TCA right wobj	30 635 230	c:13.8	6	867615	silentblock for TCA	8 630 604	di:14.2 do:53.3 (*)
3	67274	TCA left wobj	30 760 586	c:14.5	7	67685	ball joint	274 548	c:12.7 do:38.3
4	67275	TCA right wobj	30 760 587	c:14.5	8	67081	ball joint	31 201 485	c:14.8

Copyright 2021

S60 01/2000 - 04/2010

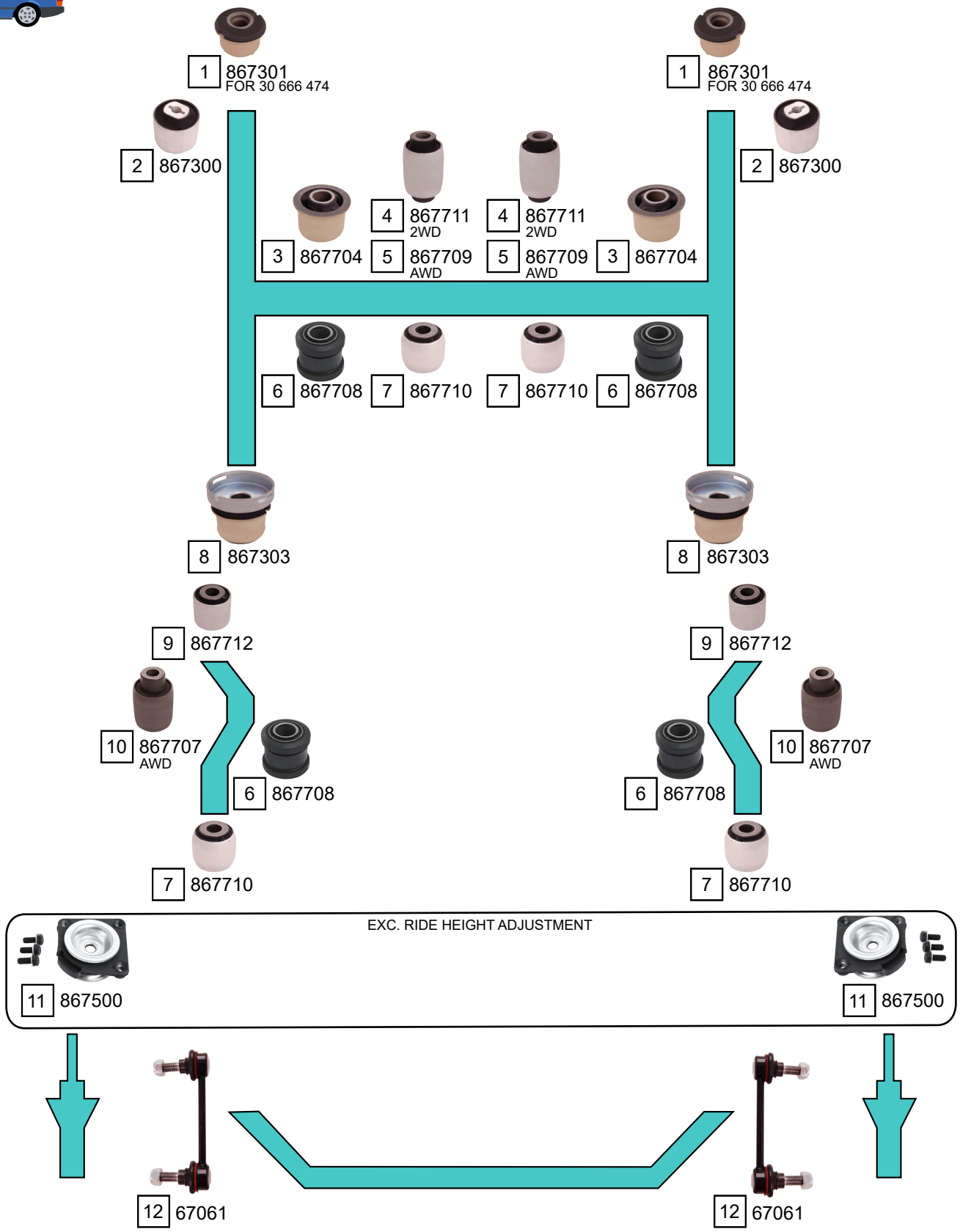

Ref.	Sidem Ref.	Description	OE-number	Measures	Ref.	Sidem Ref.	Description	OE-number	Measures
1	867301	mounting axle body	9 157 576	di:21.9 do:62.6	7	867710	silentblock for TCA	31 277 952	di:12.4 do:36 (*)
2	867300	mounting axle body	31 277 893	di:12.4 do:60	8	867303	mounting axle body	30 714 032	di:23.5 do:63
3	867704	silentblock for TCA	31 277 899	di:20.2 do:53 (*)	9	867712	silentblock for TCA	9 127 363	di:12.4 do:34.1 (*)
4	867711	silentblock for TCA	9 492 181	di:12.3 do:40.1 (*)	10	867707	silentblock for TCA	31 277 993	di:12.2 do:40.1 (*)
5	867709	silentblock for TCA	30 748 889	di:12.2 do:45.1 (*)	11	867500	strut mount	31 262 065	di:12.7 L:37
6	867708	silentblock for TCA	9 173 761	di:20.2 do:43 (*)	12	67061	stabiliser link rear axle	31 201 603	L:140

Copyright 2021

VOLVO
S60 - V60

S60 II / V60 04/2010 ->

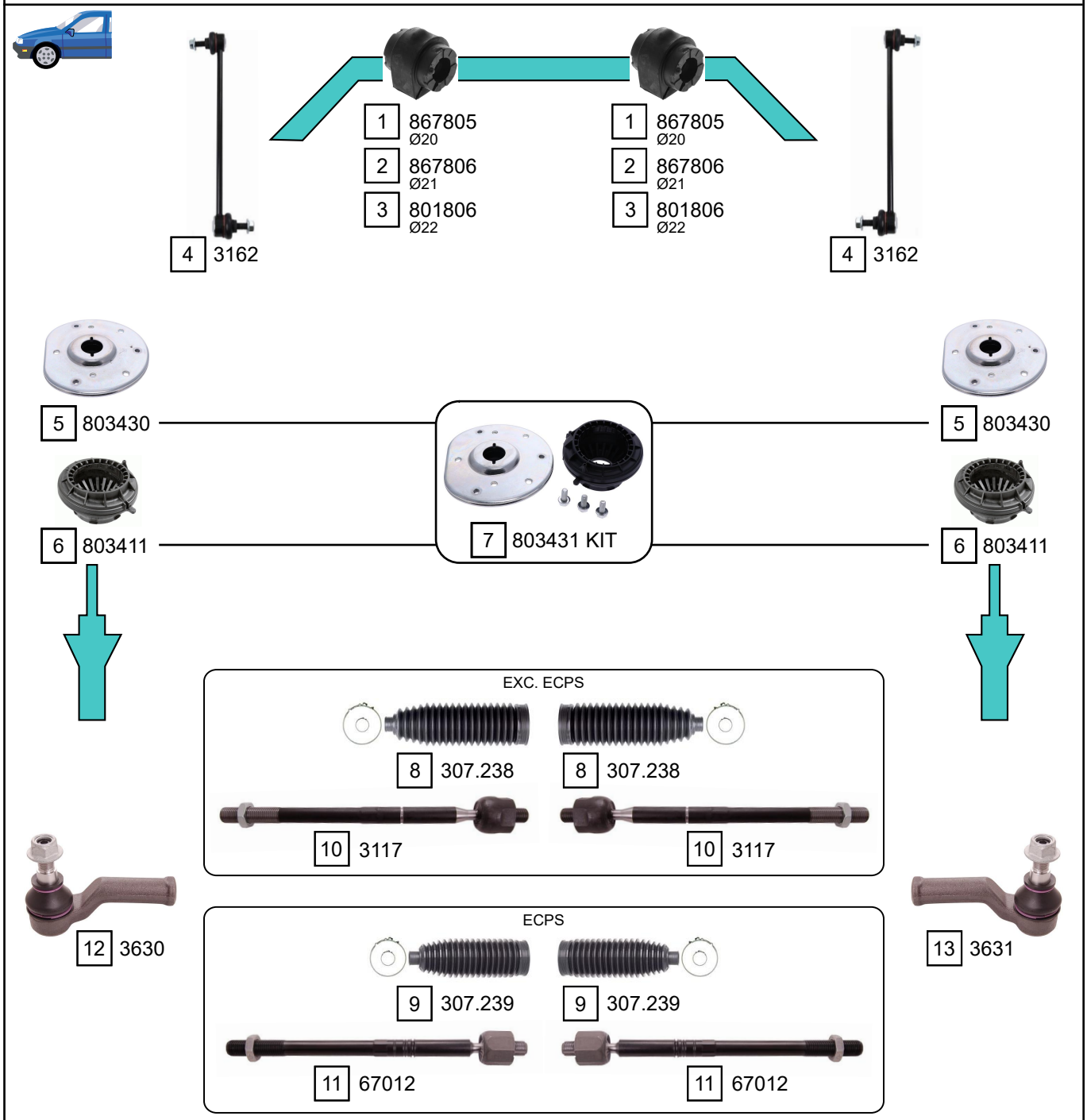

Ref.	Sidem Ref.	Description	OE-number	Measures	Ref.	Sidem Ref.	Description	OE-number	Measures
1	867805	stabiliser mounting	31 340 510	di:20	8	307.238	steering rack gaiter	30 776 251	D:52 d:16 L:194
2	867806	stabiliser mounting	31 340 511	di:21	9	307.239	steering rack gaiter	30 776 252	D:52 d:17.5 L:184
3	801806	stabiliser mounting	31 387 505	di:22	10	3117	axial joint	31 280 658	th:MM16X1.5R L:313
4	3162	stabiliser link	31 658 608	L:298	11	67012	axial joint	30 776 255	th:MM16x1.5R L:303
5	803430	strut mount	31 340 606	do:164.2 L:48.2	12	3630	tie rod end left	31 302 344	c:16.7 th:FM18X1.5R
6	803411	bearing	31 277 826	di:35 do:82 L:68.5	13	3631	tie rod end right	31 302 345	c:16.7 th:FM18X1.5R
7	803431 KIT	strut mount kit	31 340 606 S1	do:164.2 L:48.2					

Copyright 2021

S60 II / V60 04/2010 ->

S60 -> CHAS 75999
V60 -> CHAS 35000

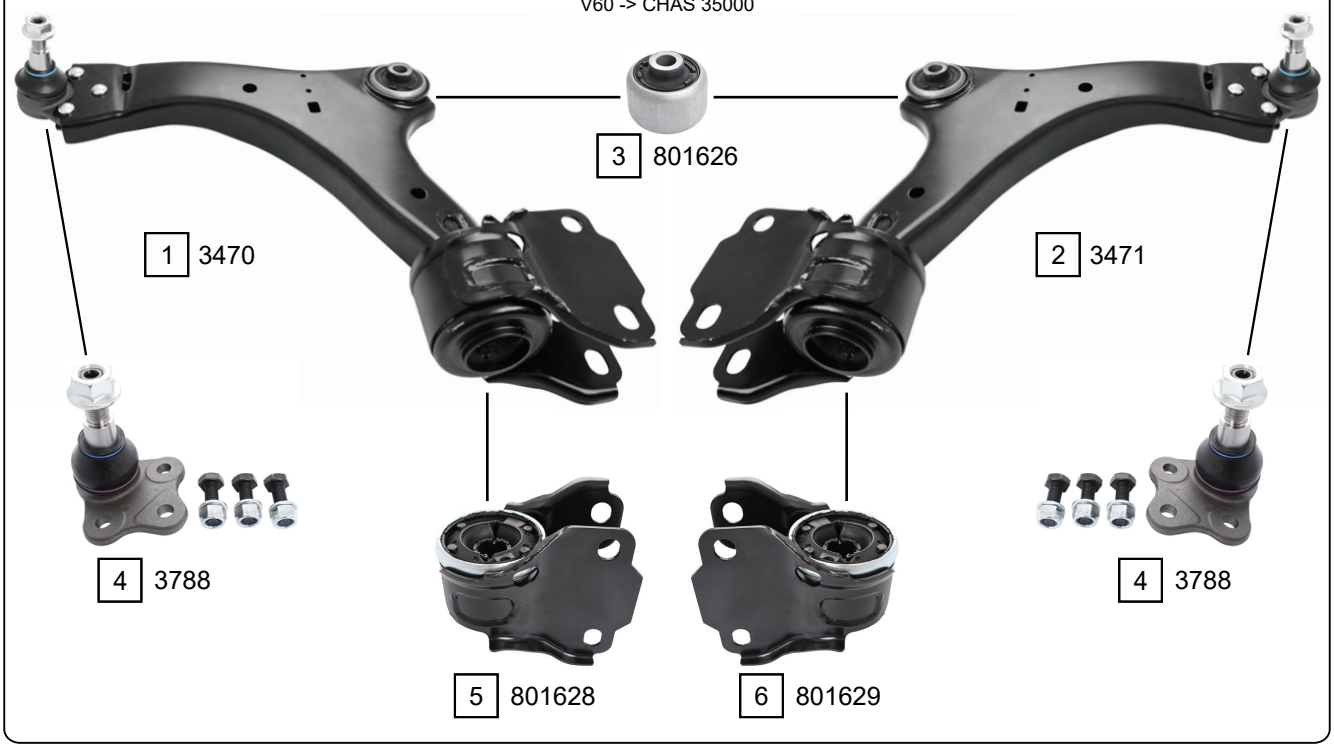

S60 CHAS 76000 ->
V60 CHAS 35001 ->

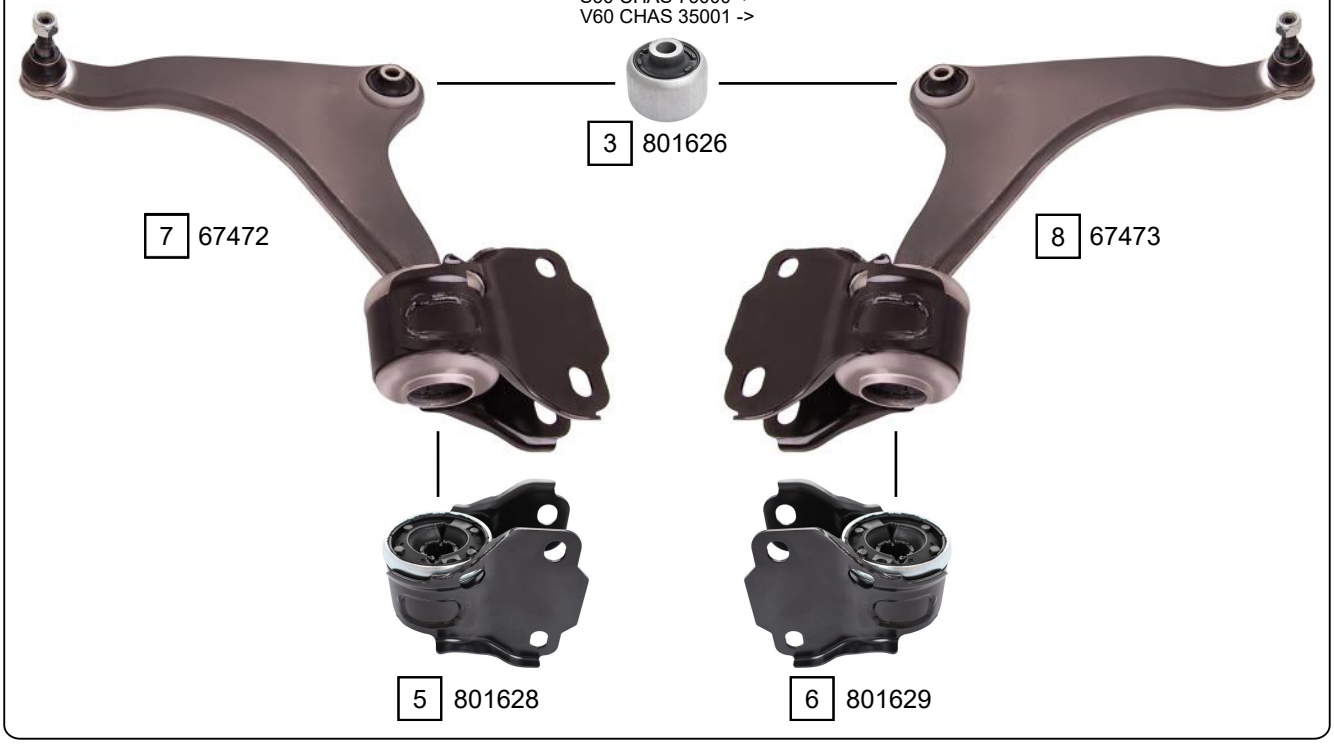

Ref.	Sidem Ref.	Description	OE-number	Measures	Ref.	Sidem Ref.	Description	OE-number	Measures
1	3470	TCA left wbj	31 317 661	c:18	5	801628	silentblock for TCA left	31 387 571	di:22 do:22 (*)
2	3471	TCA right wbj	31 317 662	c:18	6	801629	silentblock for TCA right	31 387 572	di:22 do:22 (*)
3	801626	silentblock for TCA	Part of	di:14.3 do:61 (*)	7	67472	TCA left wbj	31 429 321	c:18
4	3788	ball joint	Part of	c:18	8	67473	TCA right wbj	31 429 320	c:18

Copyright 2021

VOLVO
S60 - V60

S60 II / V60 — 04/2010 ->

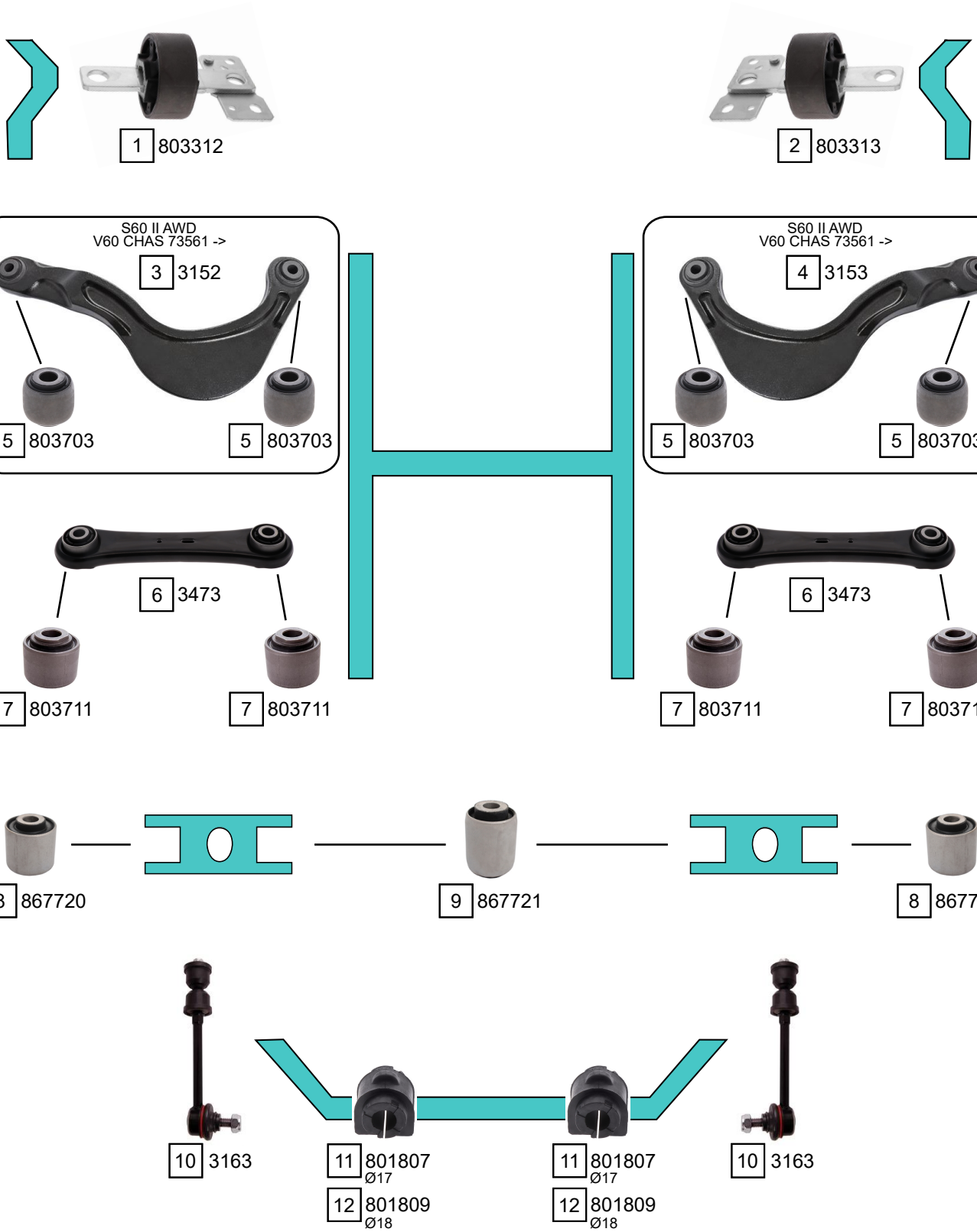

Ref.	Sidem Ref.	Description	OE-number	Measures	Ref.	Sidem Ref.	Description	OE-number	Measures
1	803312	mounting axle body	31 406 337	do:90	7	803711	silentblock for TCA	Part of	di:12.1 do:36 (*)
2	803313	mounting axle body	31 406 350	do:90	8	867720	silentblock for TCA	31 451 815	di:12.3 do:40.3 (*)
3	3152	track rod	31 406 746	L:332	9	867721	silentblock for TCA	31 451 814	di:12.3 do:38.3 (*)
4	3153	track rod	31 406 747	L:332	10	3163	stabiliser link rear axle	31 476 579	L:180
5	803703	silentblock for TCA	Part of	di:12.2 do:36.2 (*)	11	801807	stabiliser mounting	30 748 926	di:16.5
6	3473	track rod	31 262 930	L:195	12	801809	stabiliser mounting	30 748 927	di:17.5

Copyright 2021

S60 III
V60 II

10/2018 ->
02/2018 ->

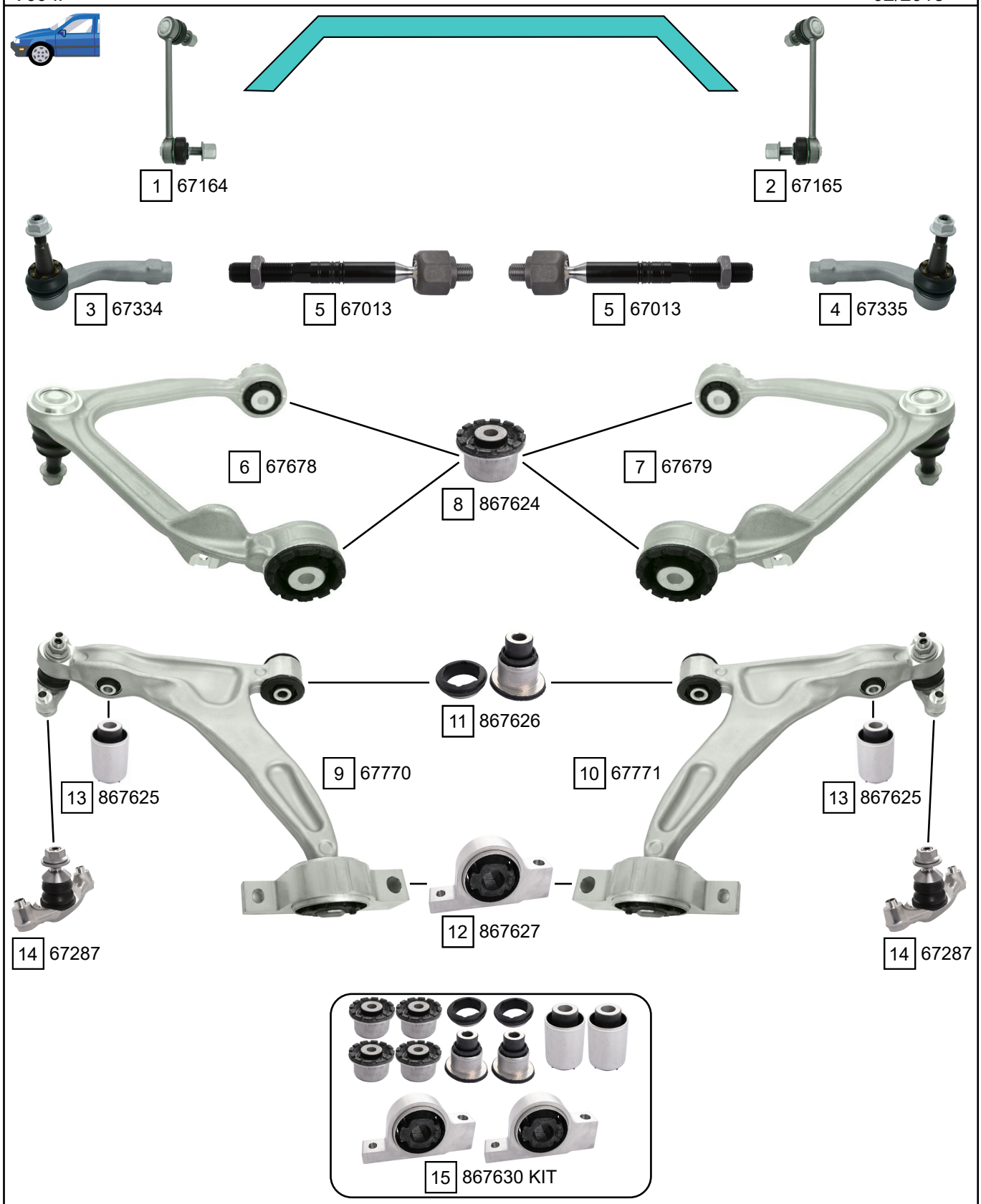

Ref.	Sidem Ref.	Description	OE-number	Measures	Ref.	Sidem Ref.	Description	OE-number	Measures
1	67164	stabiliser link left	31 658 286	L:167.5	9	67770	TCA left wbj	32 269 627	c:20.3
2	67165	stabiliser link right	31 658 287	L:167.5	10	67771	TCA right wbj	32 269 628	c:20.3
3	67334	tie rod end left	31 681 048	c:13.8 th:FM18X1.5R	11	867626	silentblock for TCA	31 451 003	di:14.1 do:44.1 (*)
4	67335	tie rod end right	31 681 049	c:13.8 th:FM18X1.5R	12	867627	silentblock for TCA	31 451 032	di:27 do:79.5 (*)
5	67013	axial joint	Part of	th:MM16X1.5R L:192	13	867625	silentblock for TCA	31 360 646	di:14.1 do:40.1 (*)
6	67678	TCA left wbj	31 476 301	c:13.8	14	67287	ball joint	32 221 192	c:19.4
7	67679	TCA right wbj	31 476 302	c:13.8	15	867630 KIT	silentblock kit	31 451 032 S1	
8	867624	silentblock for TCA	Part of	di:10 do:40 (*)					

Copyright 2021

VOLVO
S60 - V60

S60 III — 10/2018 ->
V60 II — 02/2018 ->

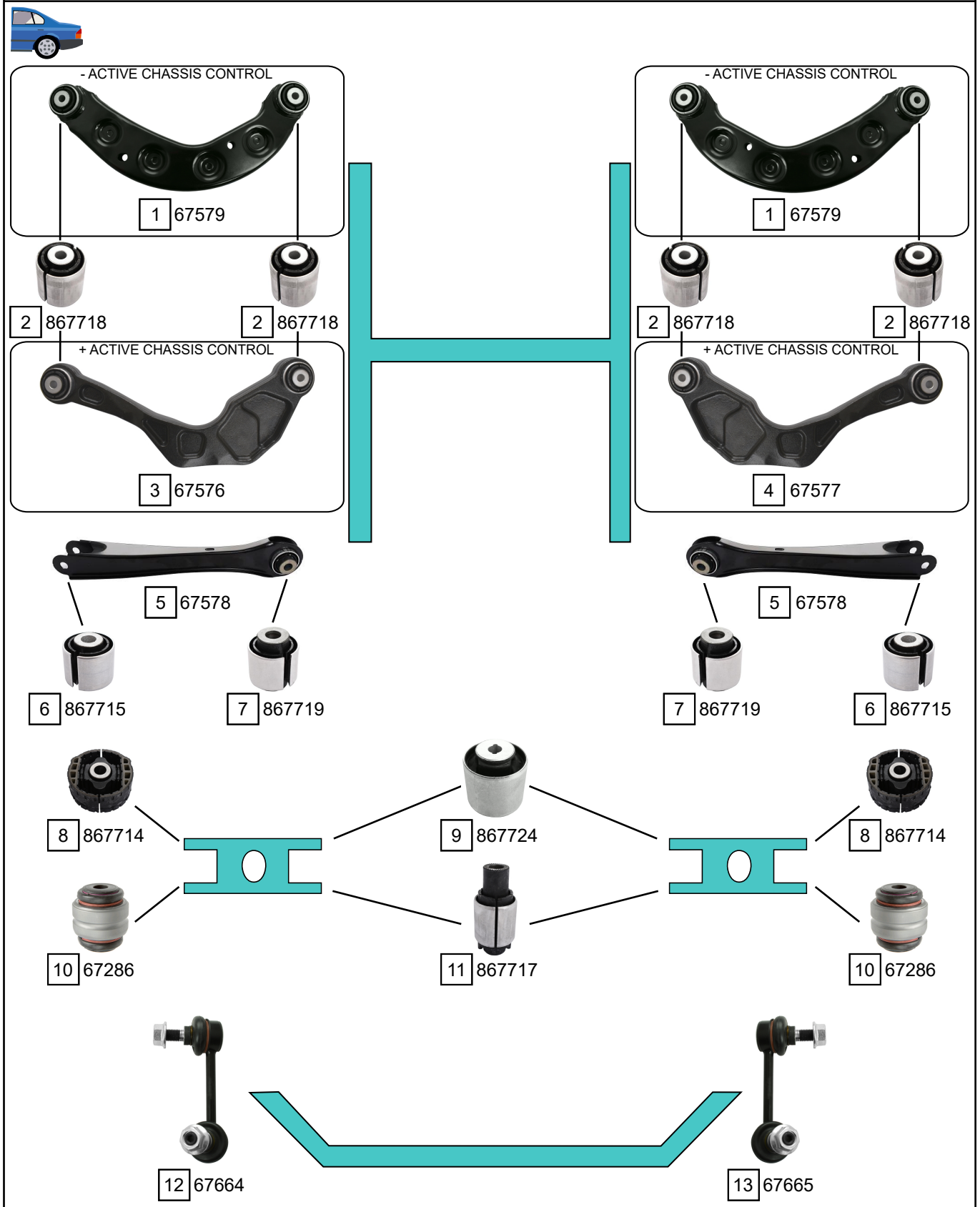

Ref.	Sidem Ref.	Description	OE-number	Measures	Ref.	Sidem Ref.	Description	OE-number	Measures
1	67579	track rod	31 360 863	L:330	8	867714	silentblock for TCA	31 360 595	di:14.1 do:77 (*)
2	867718	silentblock for TCA	Part of	di:10.3 do:44 (*)	9	867724	silentblock for TCA	31 406 965	di:12.3 do:60.3 (*)
3	67576	track rod	31 360 865	L:330	10	67286	ball joint rear	31 360 583	di:12.1 do:47.1
4	67577	track rod	31 360 866	L:330	11	867717	silentblock for TCA	31 360 582	di:14.3 do:43.6 (*)
5	67578	track rod	31 387 207	L:330	12	67664	stabiliser link left	31 387 674	L:100
6	867715	silentblock for TCA	31 360 590	di:14.1 do:42 (*)	13	67665	stabiliser link right	31 387 675	L:100
7	867719	silentblock for TCA	Part of	di:12.3 do:40 (*)					

Copyright 2021

V60 CROSS COUNTRY 04/2015 ->

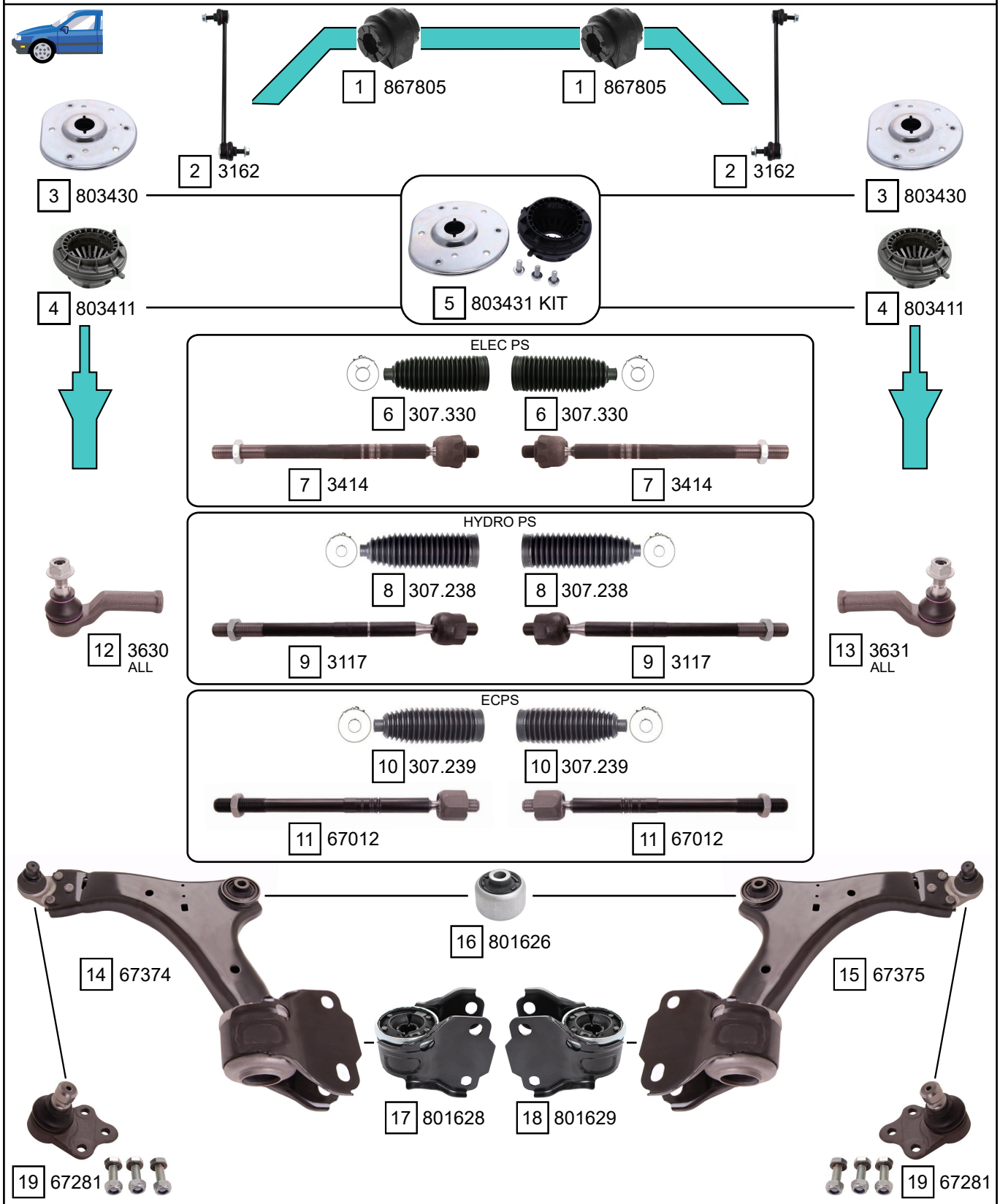

Ref.	Sidem Ref.	Description	OE-number	Measures	Ref.	Sidem Ref.	Description	OE-number	Measures
1	867805	stabiliser mounting	31 340 510	di:20	11	67012	axial joint	30 776 255	th:MM16x1.5R L:303
2	3162	stabiliser link	31 658 608	L:298	12	3630	tie rod end left	31 302 344	c:16.7 th:FM18X1.5R
3	803430	strut mount	31 340 606	do:164.2 L:48.2	13	3631	tie rod end right	31 302 345	c:16.7 th:FM18X1.5R
4	803411	bearing	31 277 826	di:35 do:82 L:68.5	14	67374	TCA left wbj	31 317 663	c:22
5	803431 KIT	strut mount kit	31 340 606 S1	do:164.2 L:48.2	15	67375	TCA right wbj	31 317 664	c:22
6	307.330	steering rack gaiter	31 429 233	D:56 d:17.5 L:195	16	801626	silentblock for TCA	Part of	di:14.3 do:61 (*)
7	3414	axial joint	part of	th:MM16X1.5R L:304	17	801628	silentblock for TCA left	31 387 571	di:22 do:22 (*)
8	307.238	steering rack gaiter	30 776 251	D:52 d:16 L:194	18	801629	silentblock for TCA right	31 387 572	di:22 do:22 (*)
9	3117	axial joint	31 280 658	th:MM16X1.5R L:313	19	67281	ball joint	Part of	c:22
10	307.239	steering rack gaiter	30 776 252	D:52 d:17.5 L:184					

Copyright 2021

VOLVO
V60

V60 CROSS COUNTRY 04/2015 ->

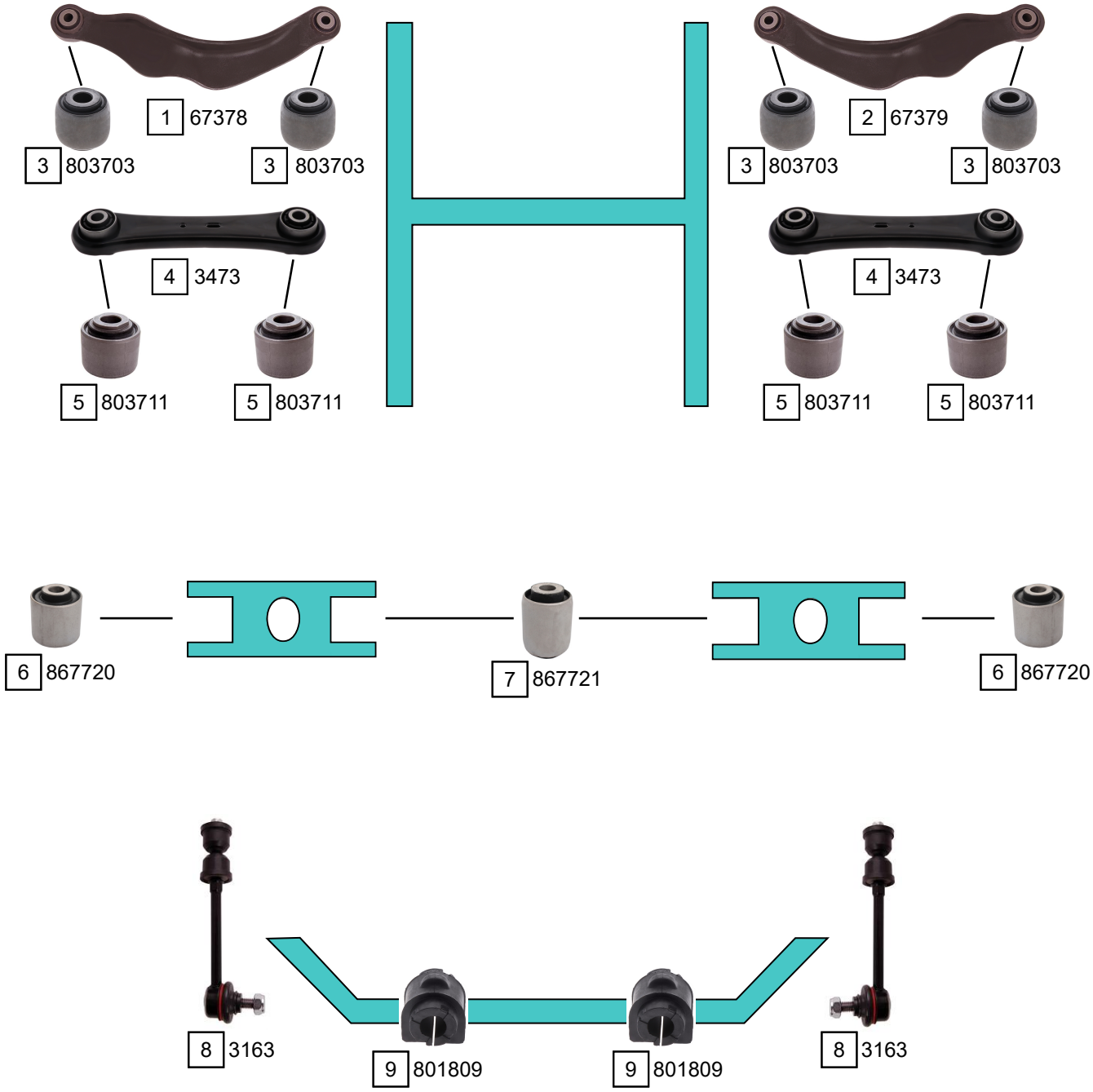

Ref.	Sidem Ref.	Description	OE-number	Measures	Ref.	Sidem Ref.	Description	OE-number	Measures
1	67378	track rod	31 406 748	L:333	6	867720	silentblock for TCA	31 451 815	di:12.3 do:40.3 (*)
2	67379	track rod	31 406 749	L:333	7	867721	silentblock for TCA	31 451 814	di:12.3 do:38.3 (*)
3	803703	silentblock for TCA	Part of	di:12.2 do:36.2 (*)	8	3163	stabiliser link rear axle	31 476 579	L:180
4	3473	track rod	31 262 930	L:195	9	801809	stabiliser mounting	30 748 927	di:17.5
5	803711	silentbloc for TCA	Part of	di:12.1 do:36 (*)					

Copyright 2021

VOLVO
S70 - V70 - C70 - XC70

S70 (P80_)	11/1996 - 11/2000
V70 I	11/1996 - 05/2000
C70 I	03/1997 - 10/2005
XC70 I	11/1997 - 02/2000

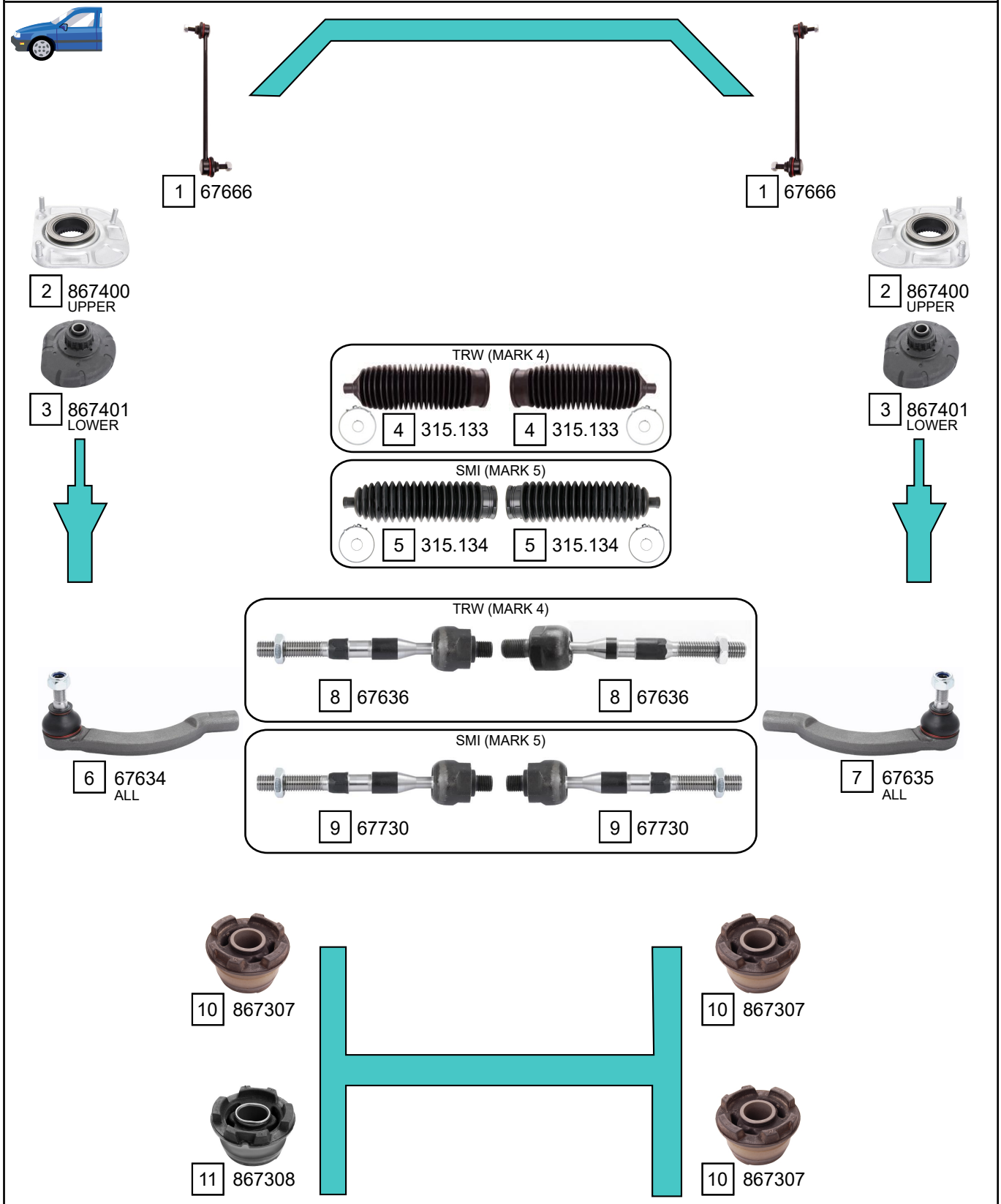

Ref.	Sidem Ref.	Description	OE-number	Measures	Ref.	Sidem Ref.	Description	OE-number	Measures
1	67666	stabiliser link	31 212 730	L:301	7	67635	tie rod end right	271 599	c:13.1 th:FM14X2R
2	867400	strut mount	31 200 599	di:45.1 L:45	8	67636	axial joint	3 546 266	th:MM14X1.5R L:176
3	867401	strut mount	30 683 637	di:16.5 do:144 L:55	9	67730	axial joint	9 191 410	th:MM16X1.5R L:177
4	315.133	steering rack gaiter	271 601	D:49 d:13 L:203	10	867307	mounting axle body	3 507 923	di:25.6 do:71.7
5	315.134	steering rack gaiter	9 191 409	D:46 d:13 L:225	11	867308	mounting axle body	3 507 924	di:24.4 do:74
6	67634	tie rod end left	271 598	c:13.1 th:F M14X2R					

Copyright 2021

VOLVO

S70 - V70 - C70 - XC70

S70 (P80_)	11/1996 - 11/2000
V70 I	11/1996 - 05/2000
C70 I	03/1997 - 10/2005
XC70 I	11/1997 - 02/2000

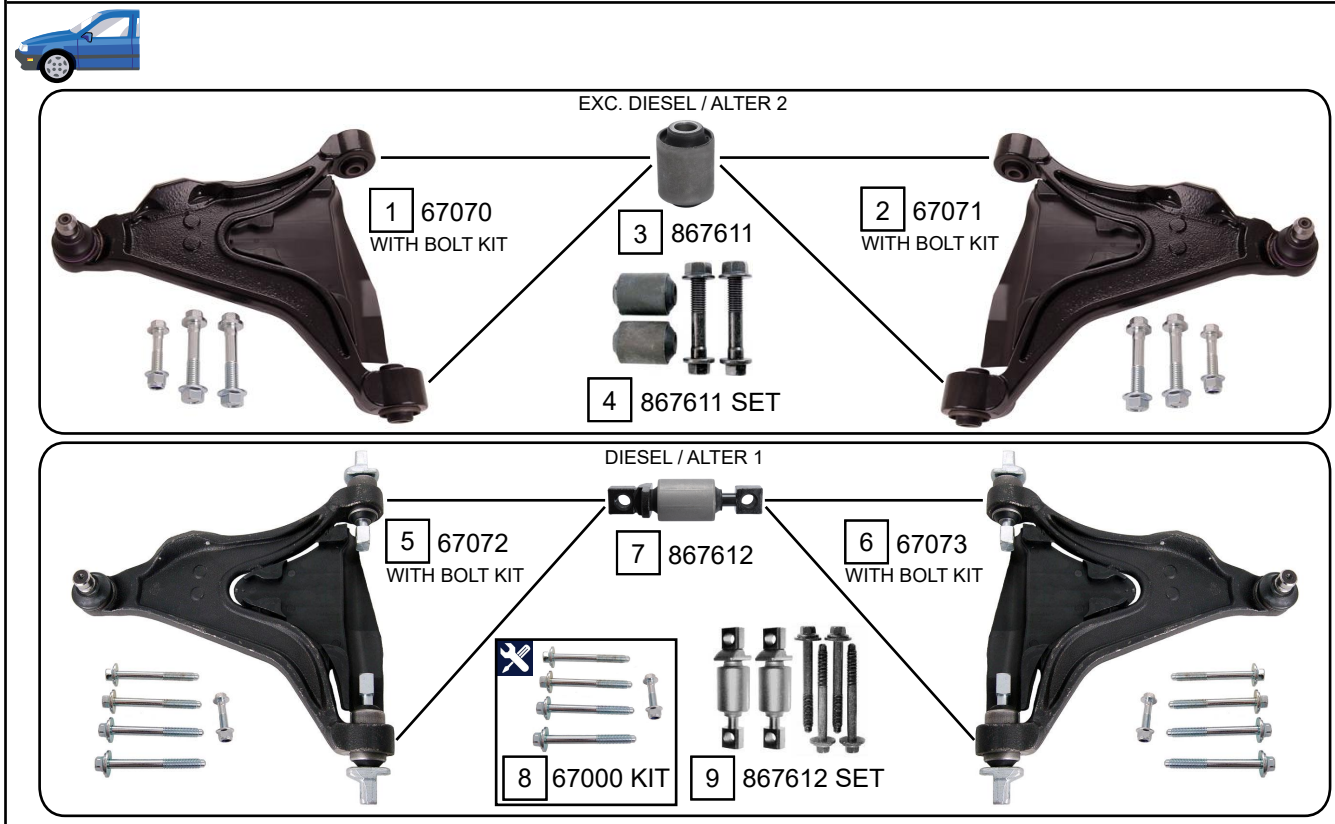

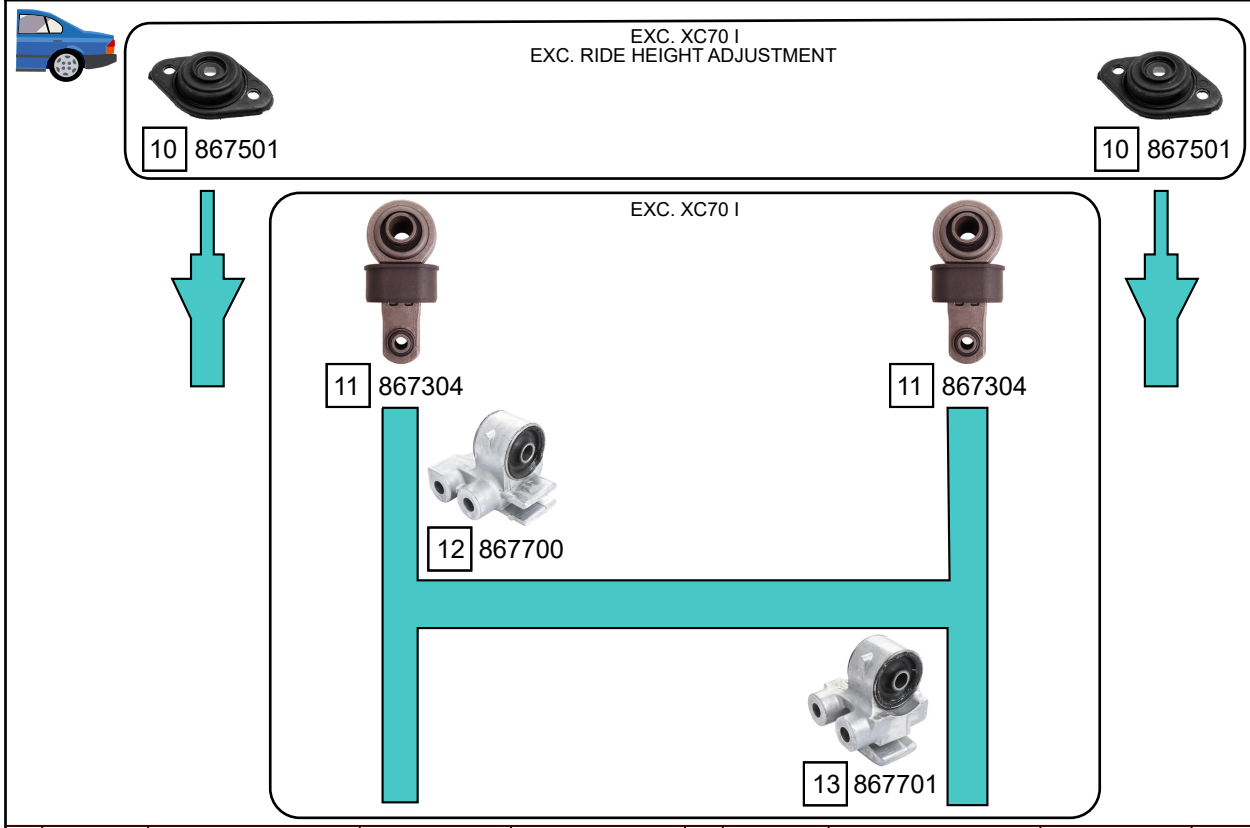

Ref.	Sidem Ref.	Description	OE-number	Measures	Ref.	Sidem Ref.	Description	OE-number	Measures
1	67070	TCA left wbj	8 628 495	c:19	8	67000 KIT	mounting kit	Part of	th:M12x1.75R
2	67071	TCA right wbj	8 628 496	c:19	9	867612 SET	silentblock kit	8 628 497 S1	
3	867611	silentblock	6 800 251	di:12 do:32 (*)	10	867501	strut mount	9 461 524	di:13 L:35
4	867611 SET	silentblock kit	271 631		11	867304	mounting axle body	3 516 122	di:20.1
5	67072	TCA left wbj	8 628 497	c:19	12	867700	silentblock for TCA	3 530 202	di:12.5 (*)
6	67073	TCA right wbj	8 628 498	c:19	13	867701	silentblock for TCA	3 516 496	di:12.5 (*)
7	867612	silentblock for TCA	Part of	do:32.3 (*)					

Copyright 2021

C70 II CONVERTIBLE 03/2006 - 06/2013

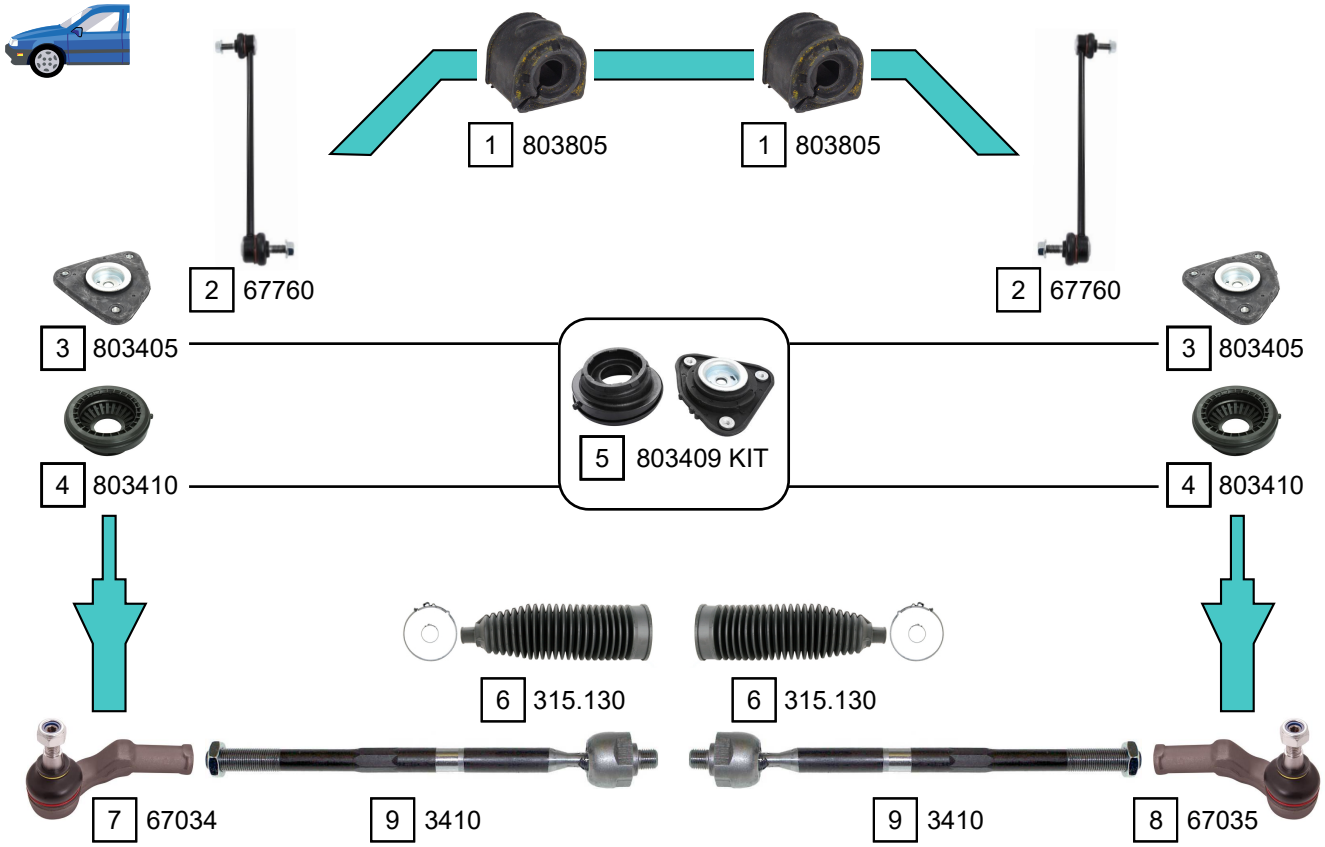

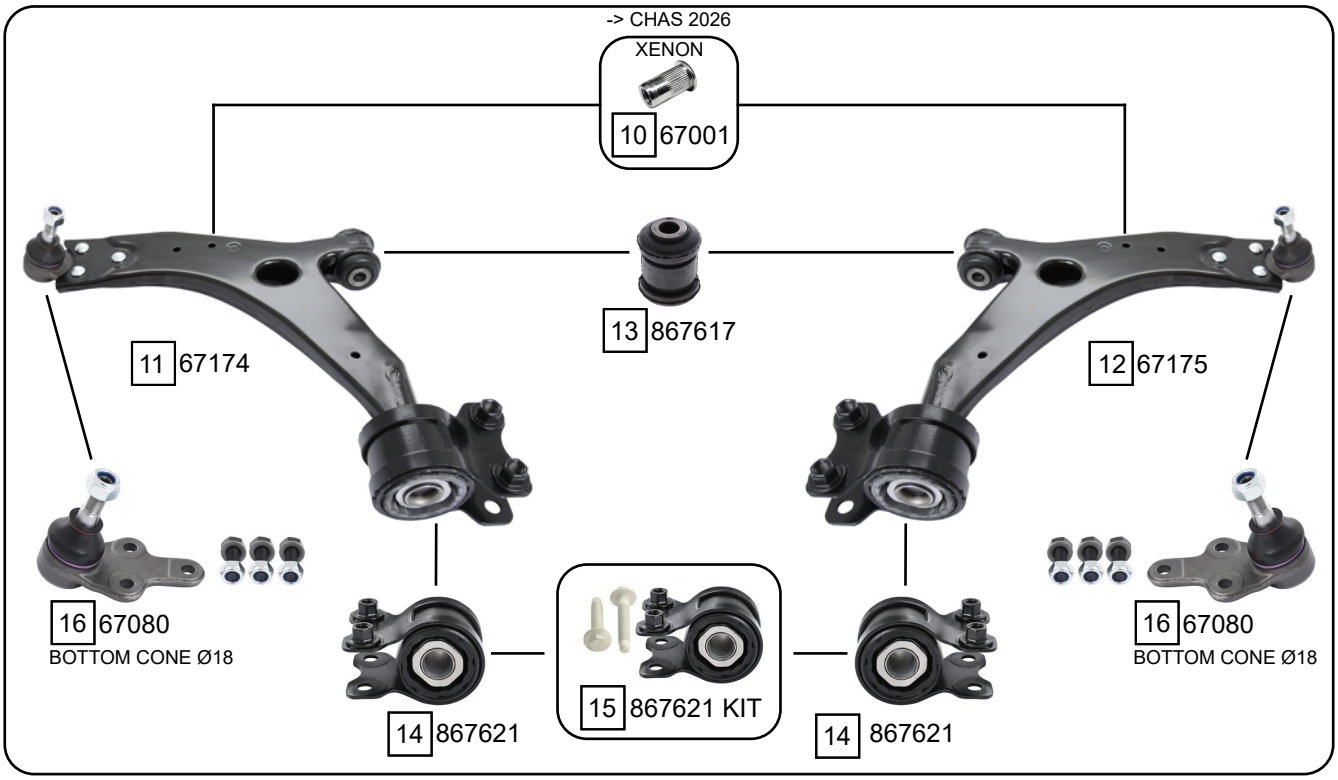

Ref.	Sidem Ref.	Description	OE-number	Measures	Ref.	Sidem Ref.	Description	OE-number	Measures
1	803805	stabiliser mounting	30 666 266	di:18	9	3410	axial joint	31 201 817	th:MM14X1.5R L:294
2	67760	stabiliser link	8 623 576	L:298	10	67001	mounting kit	999362	L:17
3	803405	strut mount	30 681 546	di:13 do:87 L:29	11	67174	TCA left wbj	31 277 464	c:15
4	803410	bearing	31 262 470	di:35 do:107 L:44	12	67175	TCA right wbj	31 277 465	c:15
5	803409 KIT	strut mount kit	30 681 546 S1	di:13 L:59	13	867617	silentblock for TCA	Part of	di:14.2 do:40.5 (*)
6	315.130	steering rack gaiter	31 317 782	D:54 d:15 L:206	14	867621	silentblock for TCA	Part of	di:22 (*)
7	67034	tie rod end left	31 201 413	c:12.3 th:FM16X1.5R	15	867621 KIT	silentblock kit	Part of	
8	67035	tie rod end right	31 201 412	c:12.3 th:FM16X1.5R	16	67080	ball joint	Part of	c:15

Copyright 2021

VOLVO
C70

C70 II CONVERTIBLE 03/2006 - 06/2013

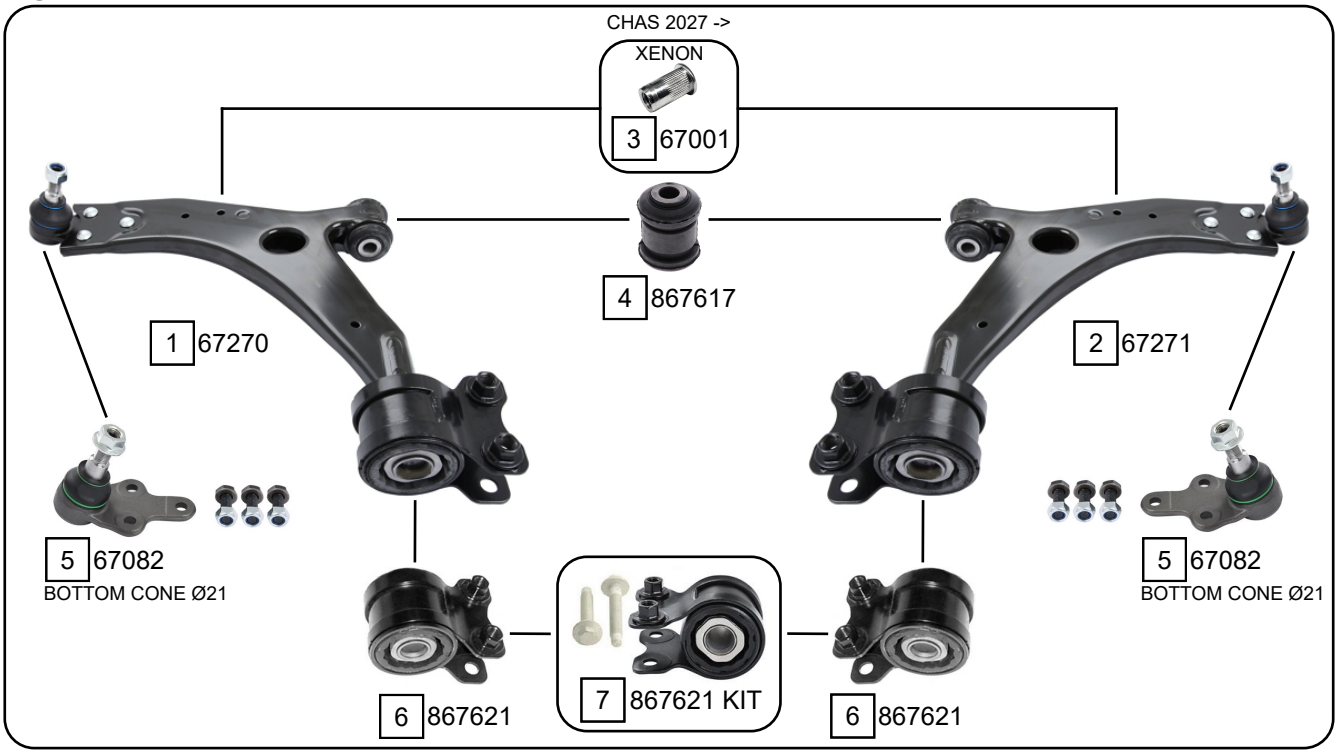

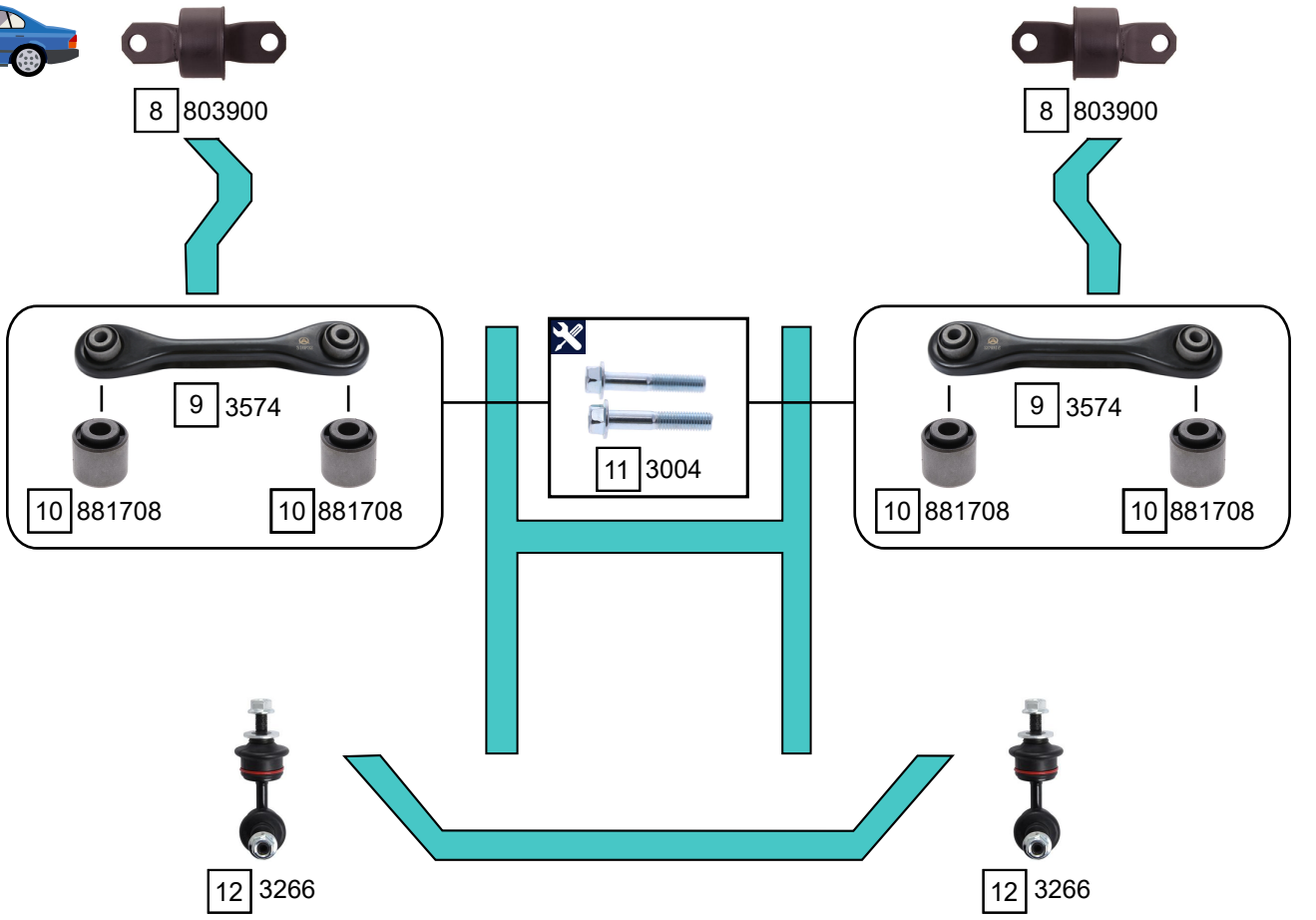

Ref.	Sidem Ref.	Description	OE-number	Measures	Ref.	Sidem Ref.	Description	OE-number	Measures
1	67270	TCA left wbj	31 277 463	c:18	7	867621 KIT	silentblock kit	Part of	
2	67271	TCA right wbj	31 277 462	c:18	8	803900	mounting axle body	30 666 821	di:14.1 do:60.2
3	67001	mounting kit	999362	L:17	9	3574	track rod	30 683 067	L:223
4	867617	silentblock for TCA	Part of	di:14.2 do:40.5 (*)	10	881708	silentblock for TCA	Part of	di:12.1 do:32.3 (*)
5	67082	ball joint	Part of	c:18	11	3004	mounting kit	999 259	th:M12x1.75R L:76
6	867621	silentblock for TCA	Part of	di:22 (*)	12	3266	stabiliser link rear axle	31 212 548	L:77

Copyright 2021

V70 II 01/2000 - 12/2008

1 67667

1 67667

2 867400
UPPER
FC1 -> CHAS 547726
FC2 -> CHAS 546642
-> CHAS 217262

3 867402
UPPER
FC1 CHAS 547727 ->
FC2 CHAS 546643 ->
CHAS 217263 ->

4 867401
LOWER

2 867400
UPPER
FC1 -> CHAS 547726
FC2 -> CHAS 546642
-> CHAS 217262

3 867402
UPPER
FC1 CHAS 547727 ->
FC2 CHAS 546643 ->
CHAS 217263 ->

4 867401
LOWER

PS

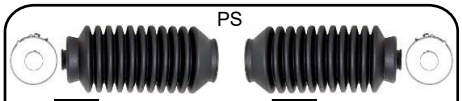

5 315.132 5 315.132

SMI

6 67136

8 67611

8 67611

7 67137

ZF

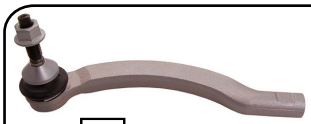

9 67236

11 67612

11 67612

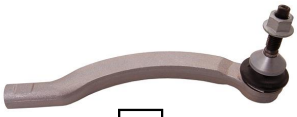

10 67237

Ref.	Sidem Ref.	Description	OE-number	Measures	Ref.	Sidem Ref.	Description	OE-number	Measures
1	67667	stabiliser link	31 201 602	L:332	7	67137	tie rod end right	274 176	c:12 th:FM14X1.5R
2	867400	strut mount	31 200 599	di:45.1 L:45	8	67611	axial joint	274 179	th:MM16X1.5R L:125
3	867402	strut mount	30 714 968	di:45.3 L:27.8	9	67236	tie rod end left	30 761 719	c:12 th:FM14X1.5R
4	867401	strut mount	30 683 637	di:16.5 do:144 L:55	10	67237	tie rod end right	30 761 718	c:12 th:FM14X1.5R
5	315.132	steering rack gaiter	272 418	D:50 d:14 L:204	11	67612	axial joint	274 353	th:MM16x1.5R L:126
6	67136	tie rod end left	274 175	c:12 th:FM14X1.5R					

Copyright 2021

VOLVO
V70

V70 II 01/2000 - 12/2008

FC1 -> CHAS 647148
FC2 -> CHAS 645617

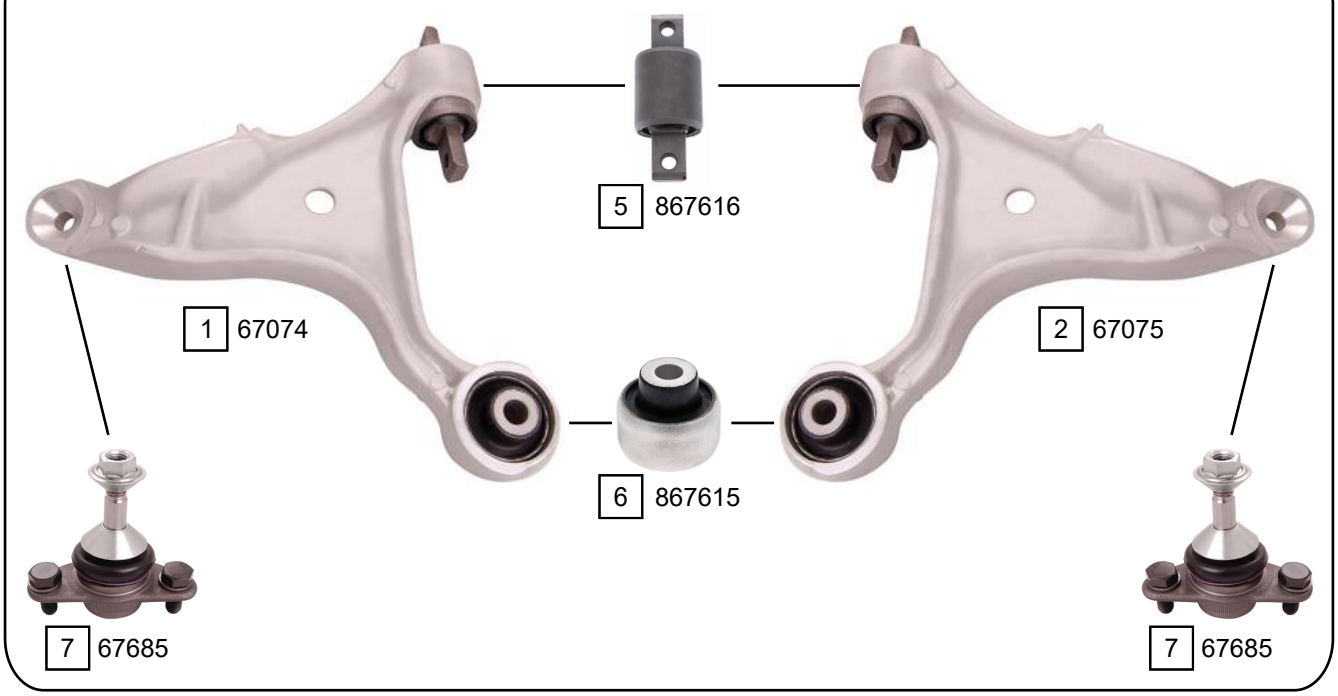

FC1 CHAS 647149 ->
FC2 CHAS 645618 ->

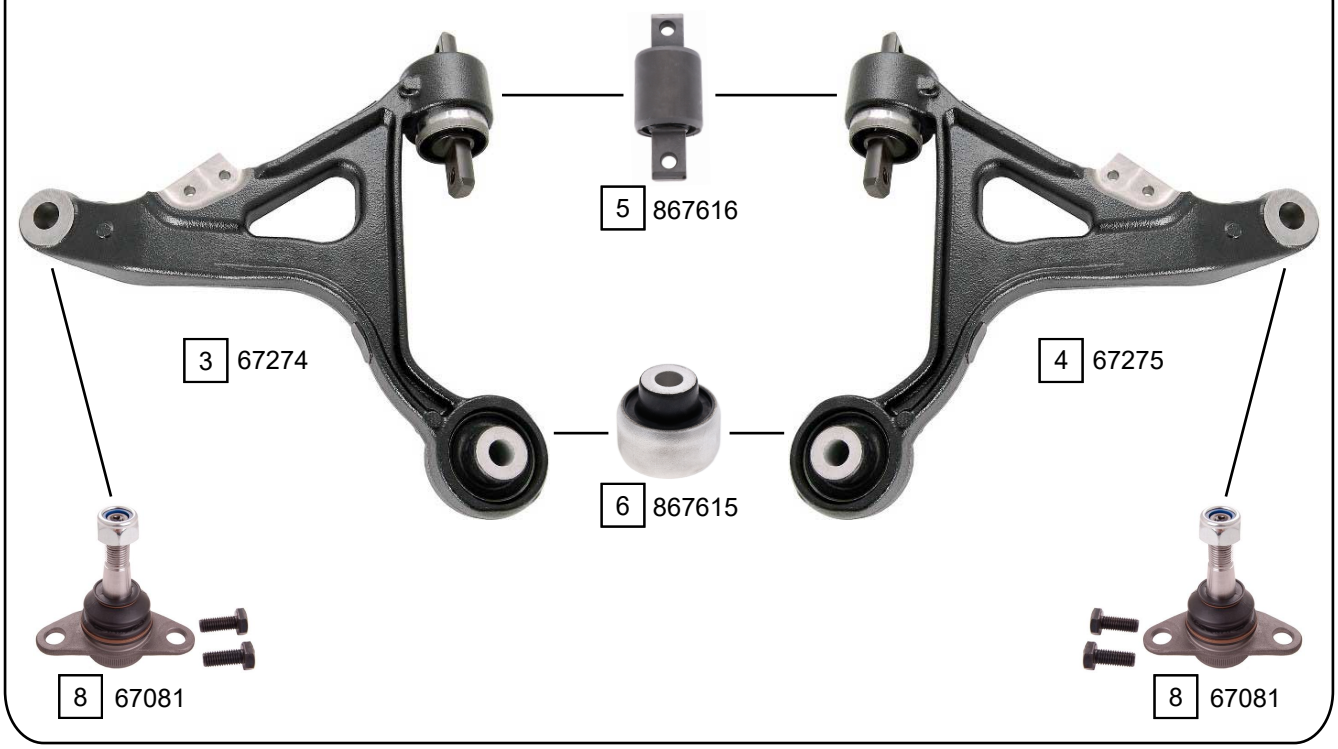

Ref.	Sidem Ref.	Description	OE-number	Measures	Ref.	Sidem Ref.	Description	OE-number	Measures
1	67074	TCA left wobj	30 635 229	c:13.8	5	867616	silentblock for TCA	9 465 971	do:48.3 (*)
2	67075	TCA right wobj	30 635 230	c:13.8	6	867615	silentblock for TCA	8 630 604	di:14.2 do:53.3 (*)
3	67274	TCA left wobj	30 760 586	c:14.5	7	67685	ball joint	274 548	c:12.7 do:38.3
4	67275	TCA right wobj	30 760 587	c:14.5	8	67081	ball joint	31 201 485	c:14.8

Copyright 2021

V70 II 01/2000 - 12/2008

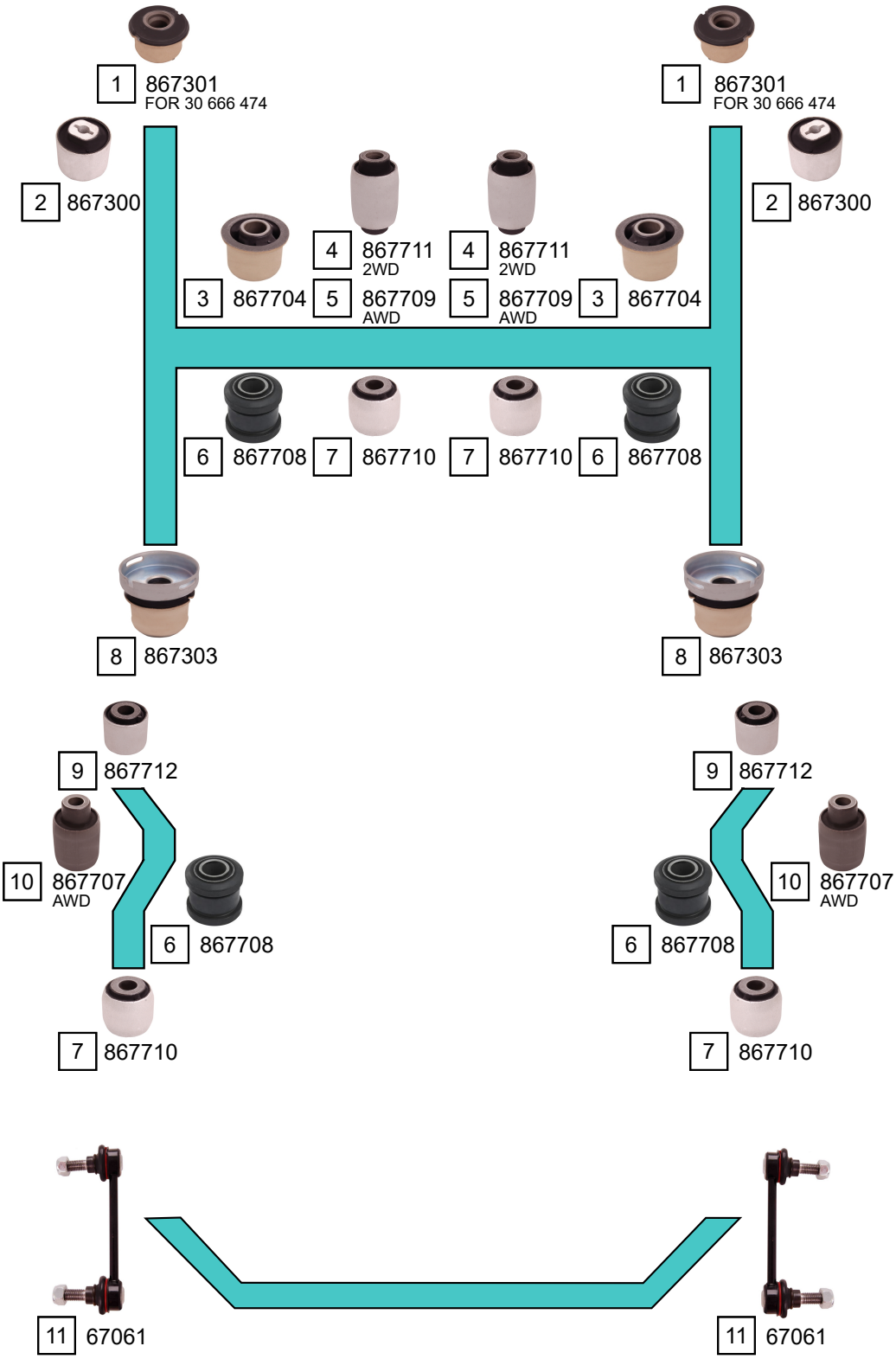

Ref.	Sidem Ref.	Description	OE-number	Measures	Ref.	Sidem Ref.	Description	OE-number	Measures
1	867301	mounting axle body	9 157 576	di:21.9 do:62.6	7	867710	silentblock for TCA	31 277 952	di:12.4 do:36 (*)
2	867300	mounting axle body	31 277 893	di:12.4 do:60	8	867303	mounting axle body	30 714 032	di:23.5 do:63
3	867704	silentblock for TCA	31 277 899	di:20.2 do:53 (*)	9	867712	silentblock for TCA	9 127 363	di:12.4 do:34.1 (*)
4	867711	silentblock for TCA	9 492 181	di:12.3 do:40.1 (*)	10	867707	silentblock for TCA	31 277 993	di:12.2 do:40.1 (*)
5	867709	silentblock for TCA	30 748 889	di:12.2 do:45.1 (*)	11	67061	stabiliser link rear axle	31 201 603	L:140
6	867708	silentblock for TCA	9 173 761	di:20.2 do:43 (*)					

Copyright 2021

VOLVO
V70

V70 III — 08/2007 - 12/2015

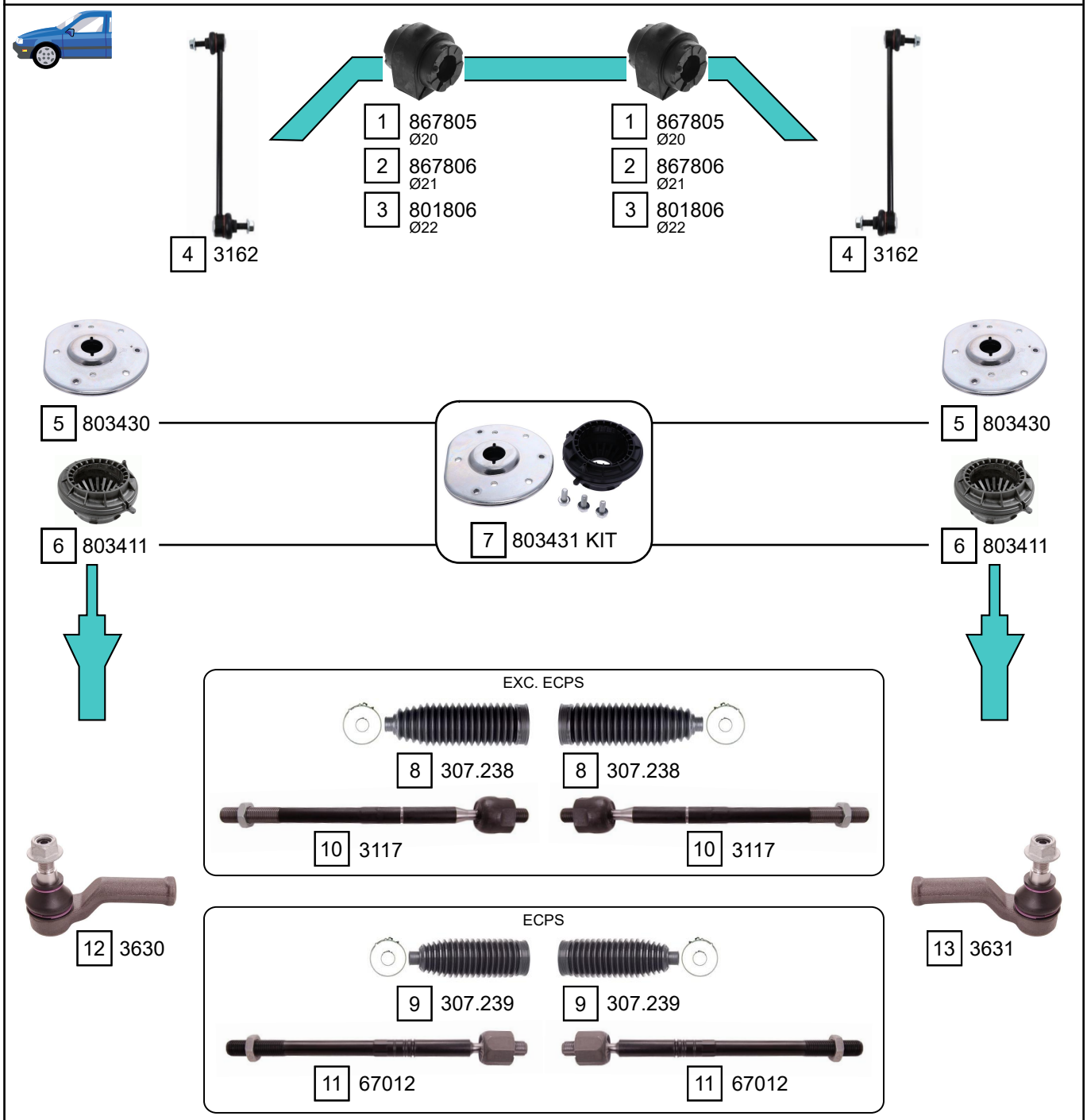

Ref.	Sidem Ref.	Description	OE-number	Measures	Ref.	Sidem Ref.	Description	OE-number	Measures
1	867805	stabiliser mounting	31 340 510	di:20	8	307.238	steering rack gaiter	30 776 251	D:52 d:16 L:194
2	867806	stabiliser mounting	31 340 511	di:21	9	307.239	steering rack gaiter	30 776 252	D:52 d:17.5 L:184
3	801806	stabiliser mounting	31 387 505	di:22	10	3117	axial joint	31 280 658	th:MM16X1.5R L:313
4	3162	stabiliser link	31 658 608	L:298	11	67012	axial joint	30 776 255	th:MM16x1.5R L:303
5	803430	strut mount	31 340 606	do:164.2 L:48.2	12	3630	tie rod end left	31 302 344	c:16.7 th:FM18X1.5R
6	803411	bearing	31 277 826	di:35 do:82 L:68.5	13	3631	tie rod end right	31 302 345	c:16.7 th:FM18X1.5R
7	803431 KIT	strut mount kit	31 340 606 S1	do:164.2 L:48.2					

Copyright 2021

V70 III 08/2007 - 12/2015

-> CHAS 213026

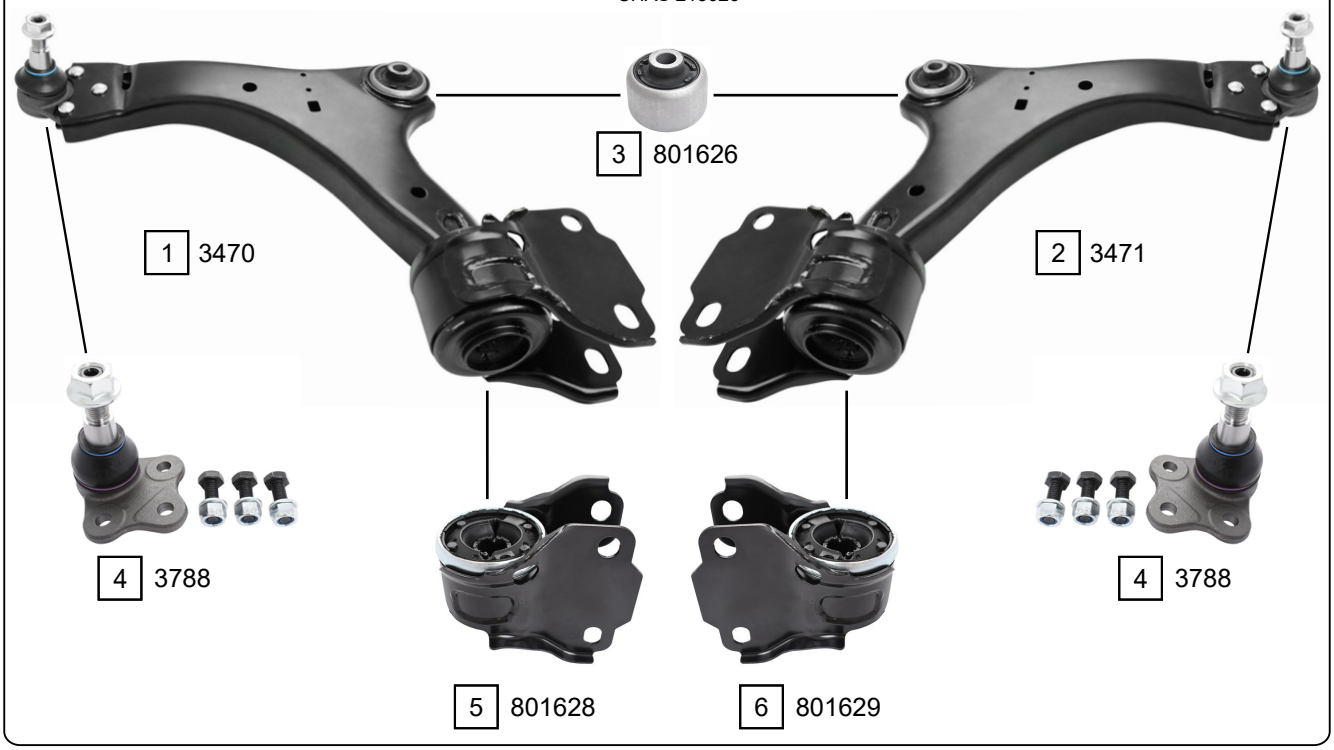

CHAS 213027 ->

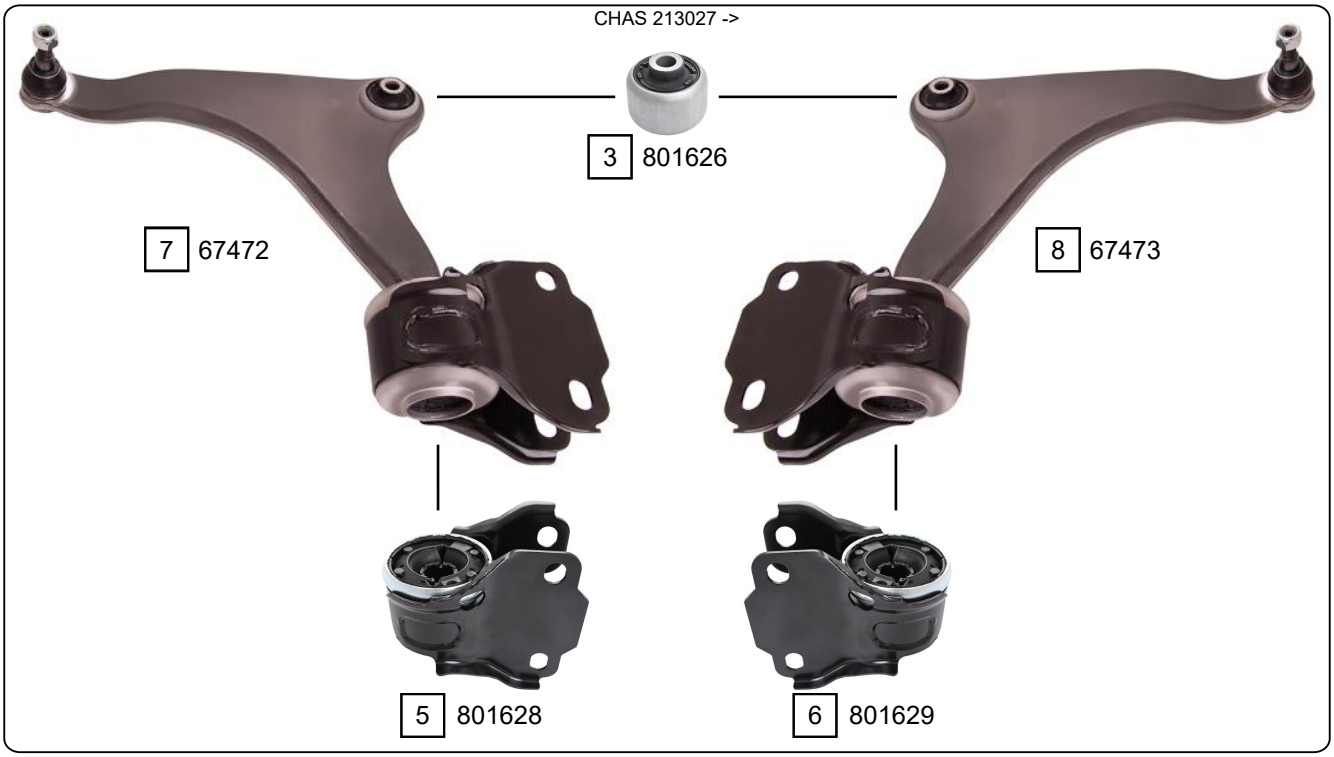

Ref.	Sidem Ref.	Description	OE-number	Measures	Ref.	Sidem Ref.	Description	OE-number	Measures
1	3470	TCA left wbj	31 317 661	c:18	5	801628	silentblock for TCA left	31 387 571	di:22 do:22 (*)
2	3471	TCA right wbj	31 317 662	c:18	6	801629	silentblock for TCA right	31 387 572	di:22 do:22 (*)
3	801626	silentblock for TCA	Part of	di:14.3 do:61 (*)	7	67472	TCA left wbj	31 429 321	c:18
4	3788	ball joint	Part of	c:18	8	67473	TCA right wbj	31 429 320	c:18

Copyright 2021

VOLVO
V70

V70 III 08/2007 - 12/2015

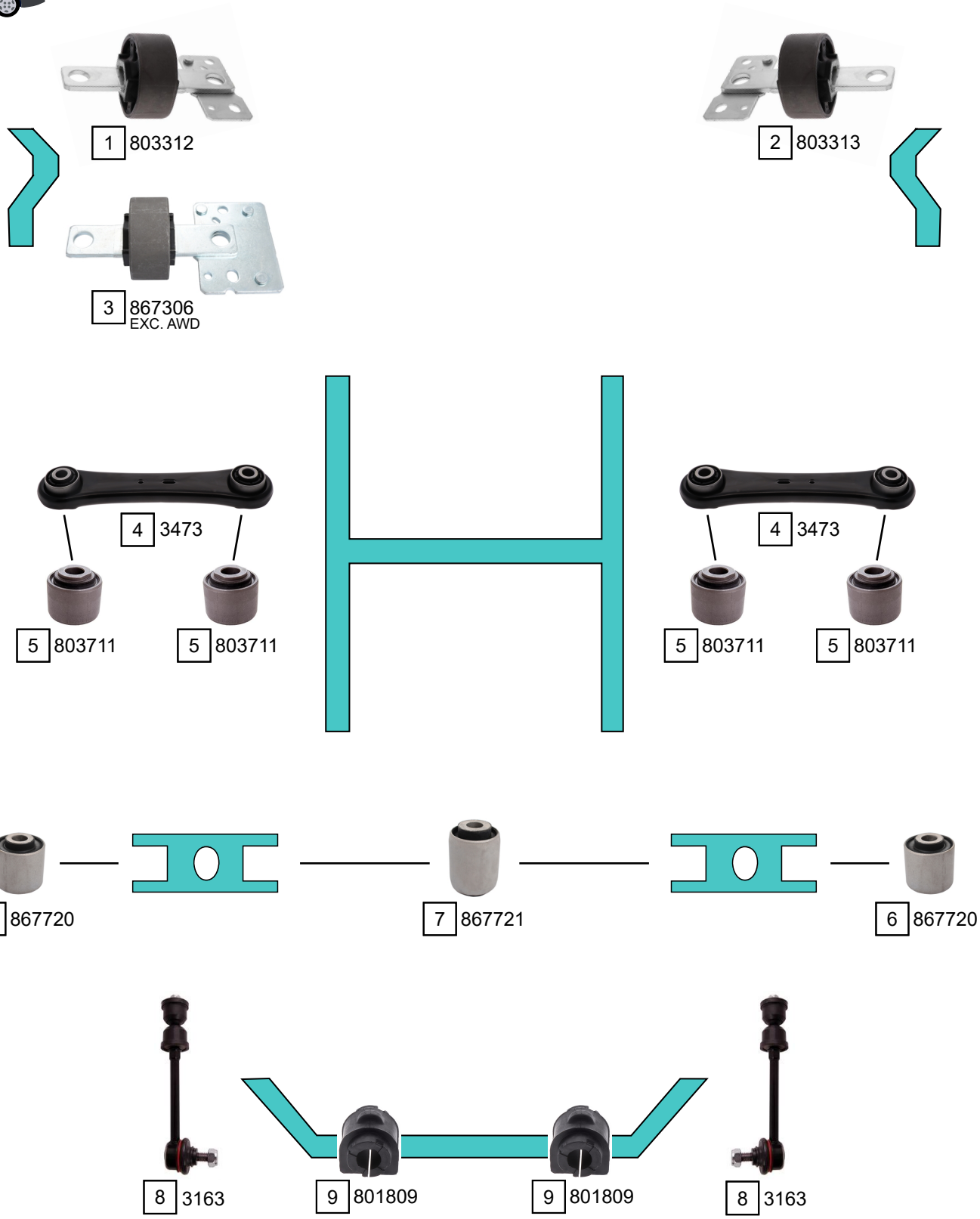

Ref.	Sidem Ref.	Description	OE-number	Measures	Ref.	Sidem Ref.	Description	OE-number	Measures
1	803312	mounting axle body	31 406 337	do:90	6	867720	silentblock for TCA	31 451 815	di:12.3 do:40.3 (*)
2	803313	mounting axle body	31 406 350	do:90	7	867721	silentblock for TCA	31 451 814	di:12.3 do:38.3 (*)
3	867306	mounting axle body	31 387 282	do:90	8	3163	stabiliser link rear axle	31 476 579	L:180
4	3473	track rod	31 262 930	L:195	9	801809	stabiliser mounting	30 748 927	di:17.5
5	803711	silentblock for TCA	Part of	di:12.1 do:36 (*)					

Copyright 2021

S80 I (TS, XY) 01/1998 - 07/2006

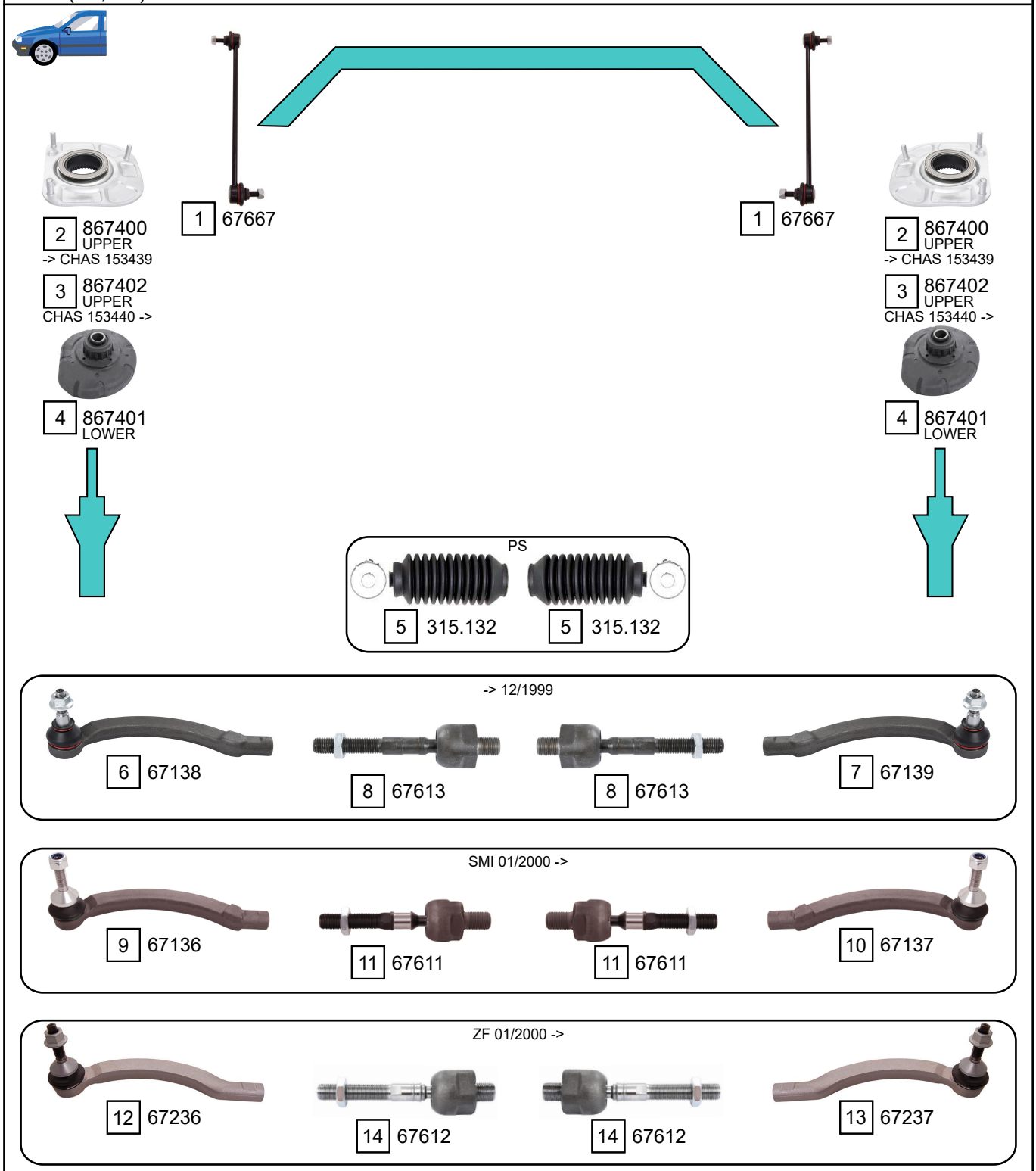

Ref.	Sidem Ref.	Description	OE-number	Measures	Ref.	Sidem Ref.	Description	OE-number	Measures
1	67667	stabiliser link	31 201 602	L:332	8	67613	axial joint	27 2428	th:MM16X1.5R L:134
2	867400	strut mount	31 200 599	di:45.1 L:45	9	67136	tie rod end left	274 175	c:12 th:FM14X1.5R
3	867402	strut mount	30 714 968	di:45.3 L:27.8	10	67137	tie rod end right	274 176	c:12 th:FM14X1.5R
4	867401	strut mount	30 683 637	di:16.5 do:144 L:55	11	67611	axial joint	274 179	th:MM16X1.5R L:125
5	315.132	steering rack gaiter	272 418	D:50 d:14 L:204	12	67236	tie rod end left	30 761 719	c:12 th:FM14X1.5R
6	67138	tie rod end left	272 416	c:13.1 th:FM14X2R	13	67237	tie rod end right	30 761 718	c:12 th:FM14X1.5R
7	67139	tie rod end right	272 417	c:13.1 th:FM14X2R	14	67612	axial joint	274 353	th:MM16x1.5R L:126

Copyright 2021

VOLVO
S80

S80 I (TS, XY) 01/1998 - 07/2006

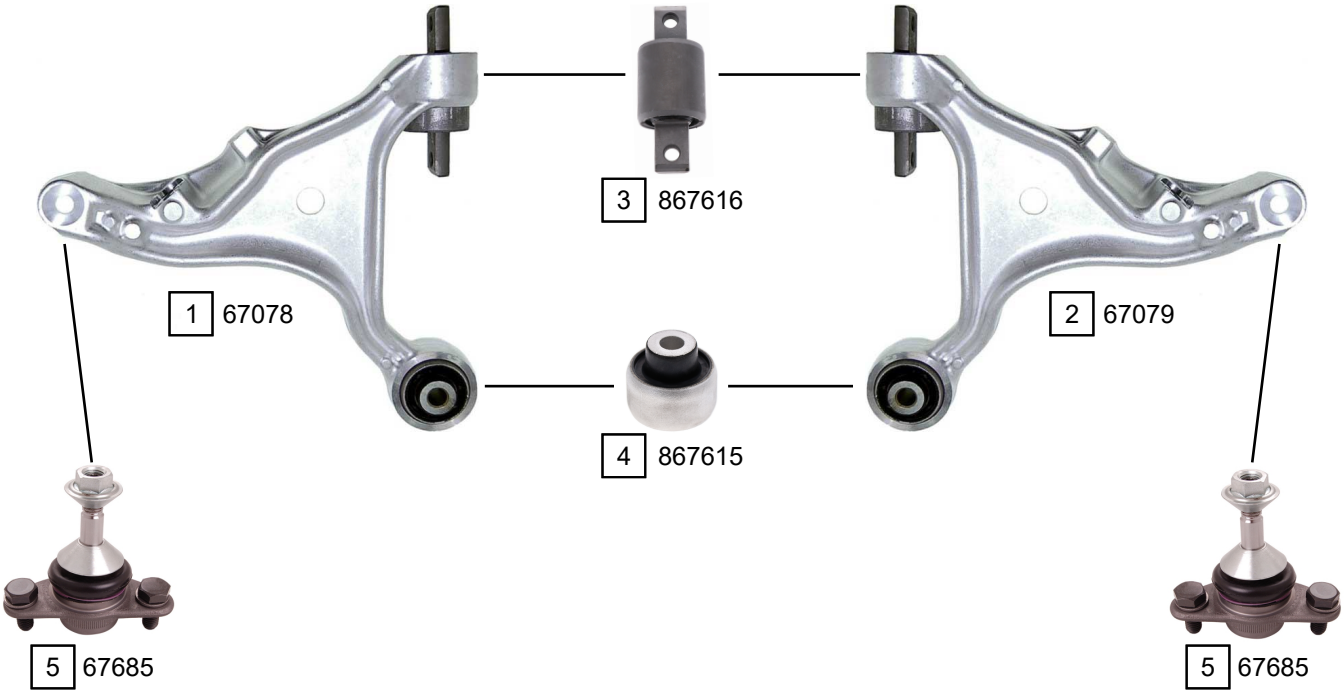

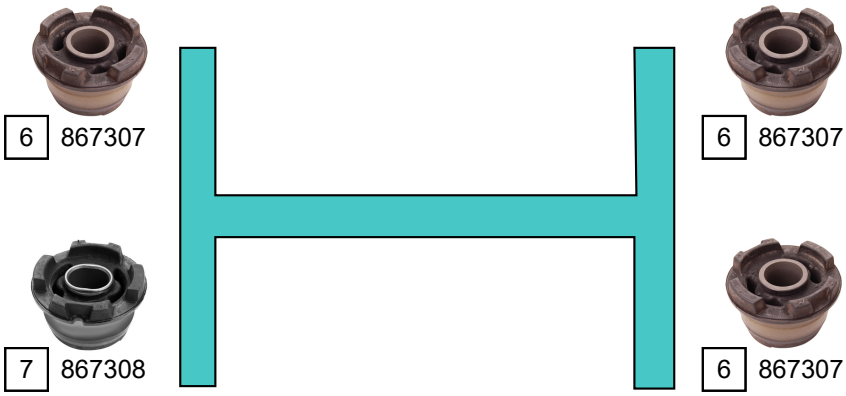

Ref.	Sidem Ref.	Description	OE-number	Measures	Ref.	Sidem Ref.	Description	OE-number	Measures
1	67078	TCA left wobj	30 635 227	c:13.8	5	67685	ball joint	274 548	c:12.7 do:38.3
2	67079	TCA right wobj	30 635 228	c:13.8	6	867307	mounting axle body	3 507 923	di:25.6 do:71.7
3	867616	silentblock for TCA	9 465 971	do:48.3 (*)	7	867308	mounting axle body	3 507 924	di:24.4 do:74
4	867615	silentblock for TCA	8 630 604	di:14.2 do:53.3 (*)					

Copyright 2021

S80 I (TS, XY) 01/1998 - 07/2006

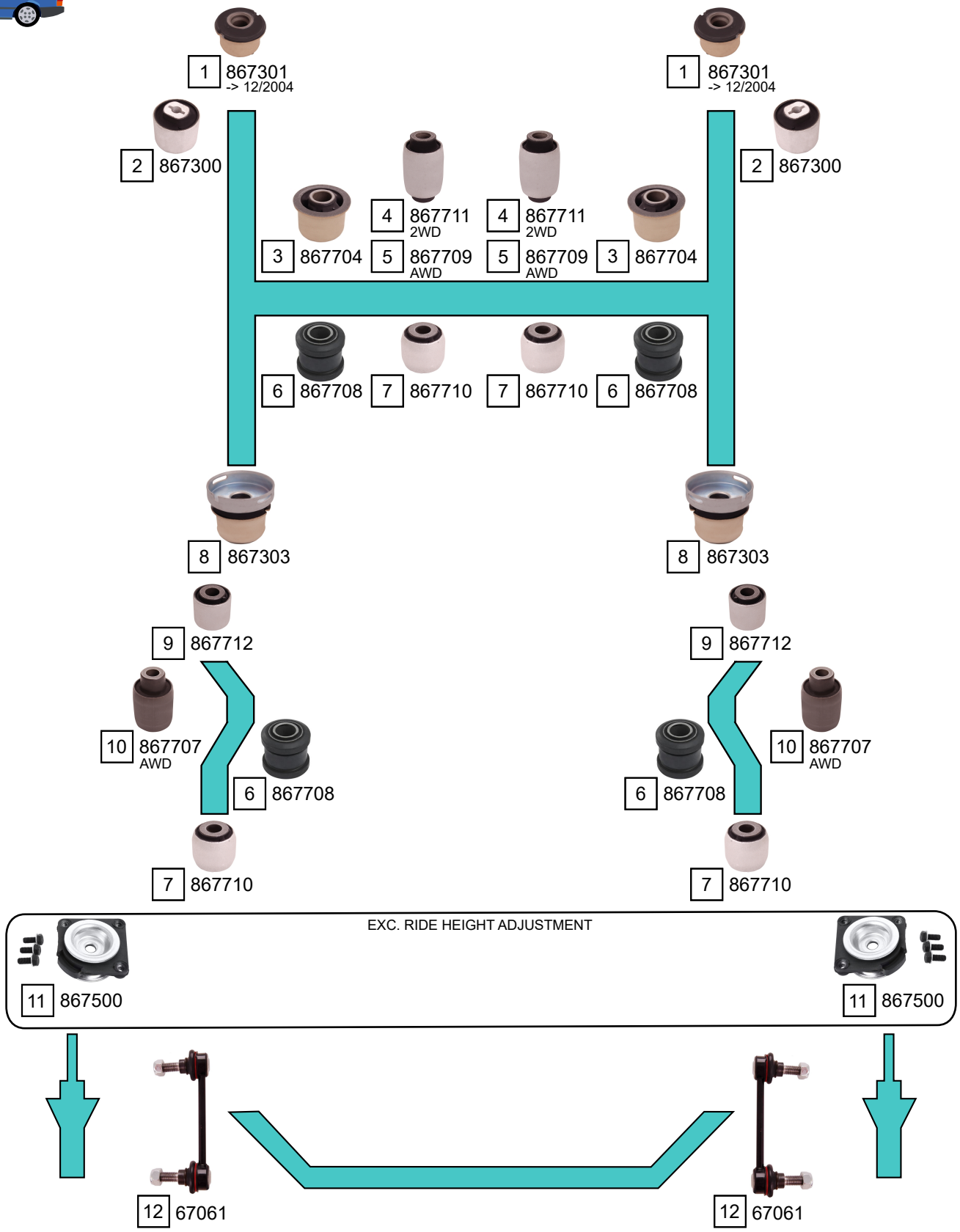

Ref.	Sidem Ref.	Description	OE-number	Measures	Ref.	Sidem Ref.	Description	OE-number	Measures
1	867301	mounting axle body	9 157 576	di:21.9 do:62.6	7	867710	silentblock for TCA	31 277 952	di:12.4 do:36 (*)
2	867300	mounting axle body	31 277 893	di:12.4 do:60	8	867303	mounting axle body	30 714 032	di:23.5 do:63
3	867704	silentblock for TCA	31 277 899	di:20.2 do:53 (*)	9	867712	silentblock for TCA	9 127 363	di:12.4 do:34.1 (*)
4	867711	silentblock for TCA	9 492 181	di:12.3 do:40.1 (*)	10	867707	silentblock for TCA	31 277 993	di:12.2 do:40.1 (*)
5	867709	silentblock for TCA	30 748 889	di:12.2 do:45.1 (*)	11	867500	strut mount	31 262 065	di:12.7 L:37
6	867708	silentblock for TCA	9 173 761	di:20.2 do:43 (*)	12	67061	stabiliser link rear axle	31 201 603	L:140

Copyright 2021

VOLVO
S80

S80 II (AS) 03/2006 - 12/2016

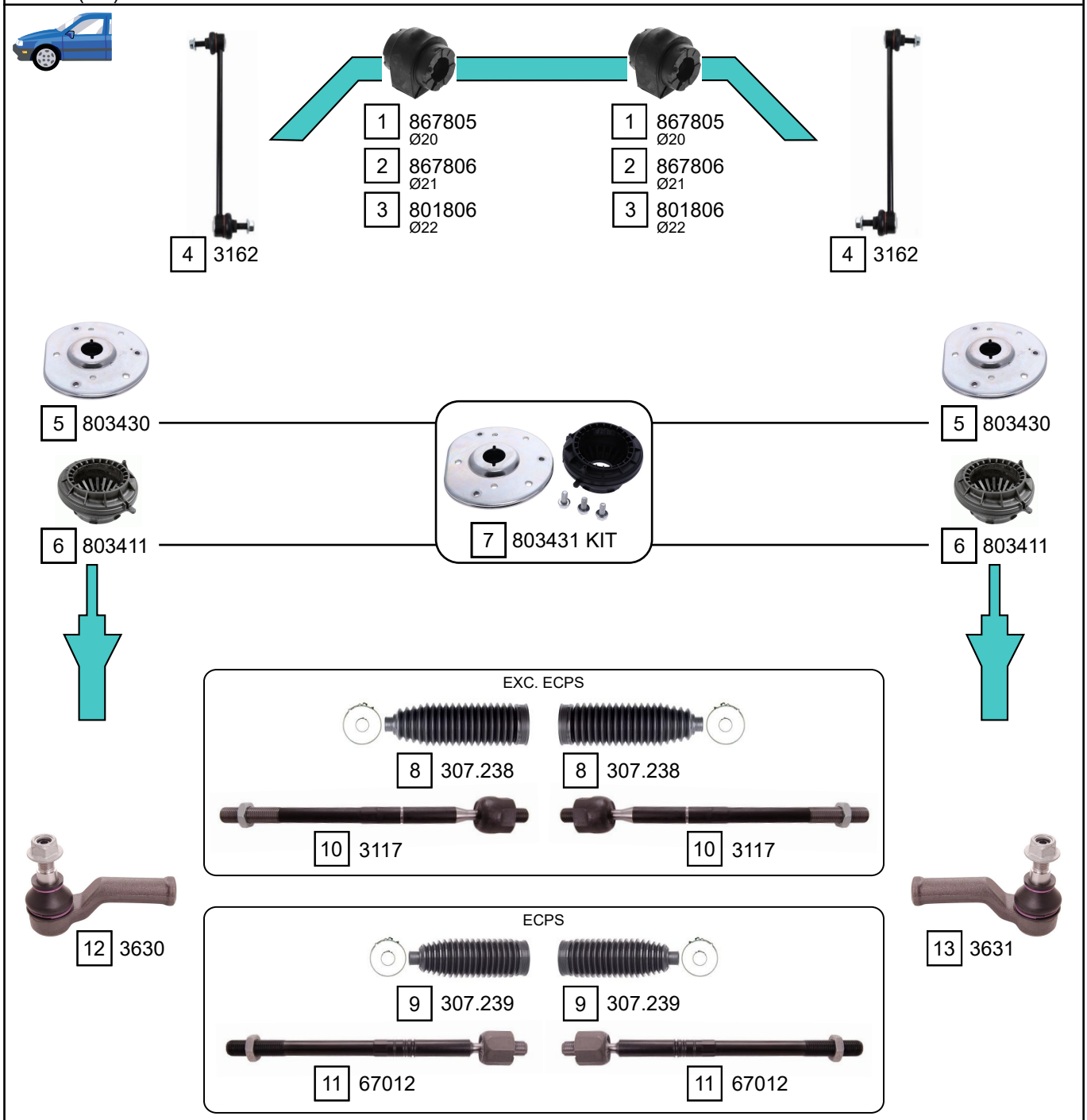

Ref.	Sidem Ref.	Description	OE-number	Measures	Ref.	Sidem Ref.	Description	OE-number	Measures
1	867805	stabiliser mounting	31 340 510	di:20	8	307.238	steering rack gaiter	30 776 251	D:52 d:16 L:194
2	867806	stabiliser mounting	31 340 511	di:21	9	307.239	steering rack gaiter	30 776 252	D:52 d:17.5 L:184
3	801806	stabiliser mounting	31 387 505	di:22	10	3117	axial joint	31 280 658	th:MM16X1.5R L:313
4	3162	stabiliser link	31 658 608	L:298	11	67012	axial joint	30 776 255	th:MM16x1.5R L:303
5	803430	strut mount	31 340 606	do:164.2 L:48.2	12	3630	tie rod end left	31 302 344	c:16.7 th:FM18X1.5R
6	803411	bearing	31 277 826	di:35 do:82 L:68.5	13	3631	tie rod end right	31 302 345	c:16.7 th:FM18X1.5R
7	803431 KIT	strut mount kit	31 340 606 S1	do:164.2 L:48.2					

Copyright 2021

S80 II (AS) 03/2006 - 12/2016

-> CHAS 151013

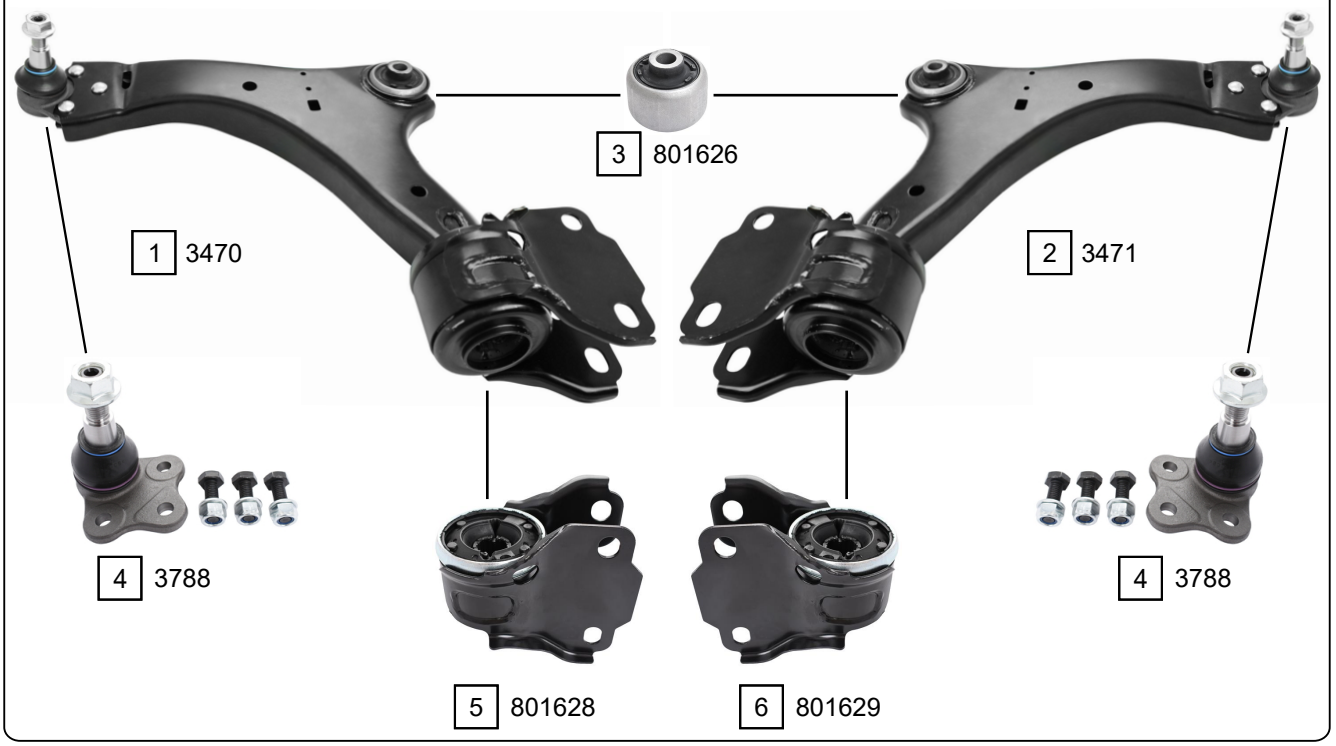

CHAS 151014 ->

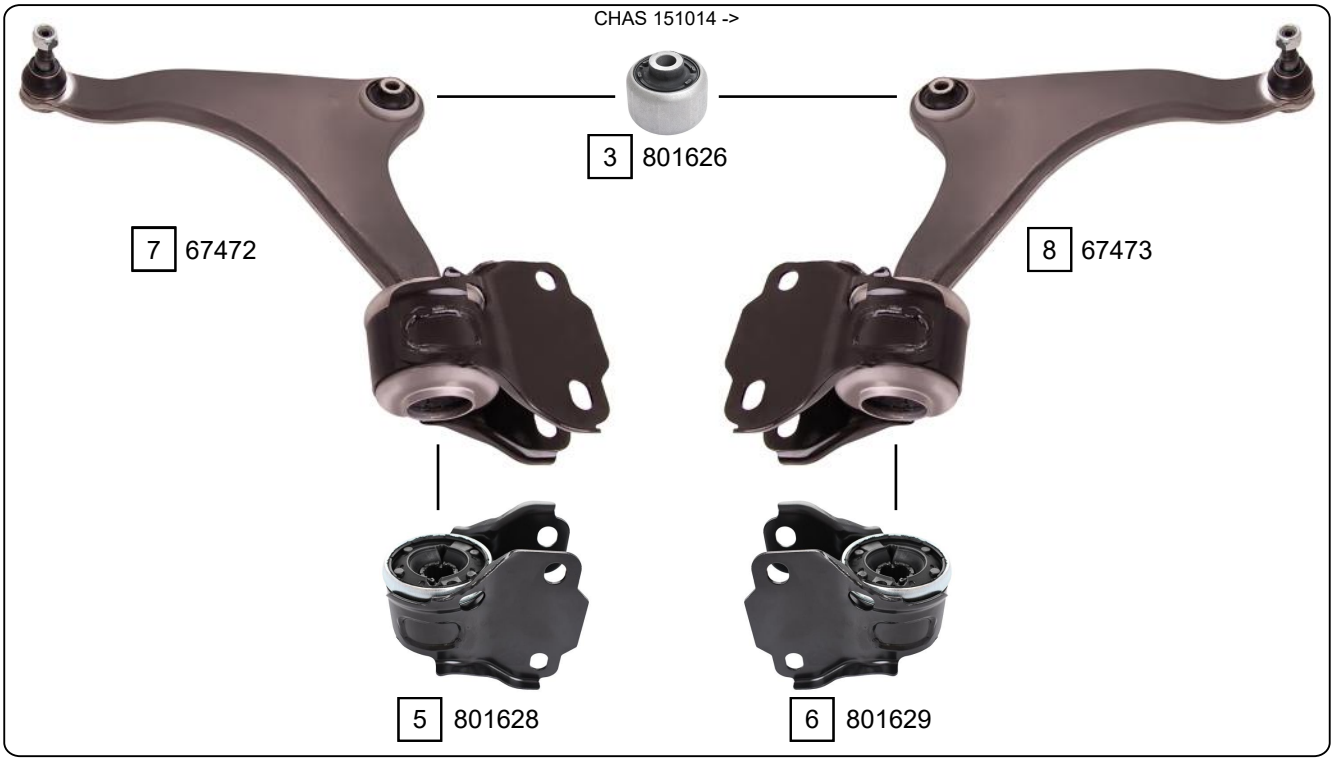

Ref.	Sidem Ref.	Description	OE-number	Measures	Ref.	Sidem Ref.	Description	OE-number	Measures
1	3470	TCA left wbj	31 317 661	c:18	5	801628	silentblock for TCA left	31 387 571	di:22 do:22 (*)
2	3471	TCA right wbj	31 317 662	c:18	6	801629	silentblock for TCA right	31 387 572	di:22 do:22 (*)
3	801626	silentblock for TCA	Part of	di:14.3 do:61 (*)	7	67472	TCA left wbj	31 429 321	c:18
4	3788	ball joint	Part of	c:18	8	67473	TCA right wbj	31 429 320	c:18

Copyright 2021

VOLVO
S80

S80 II (AS) 03/2006 - 12/2016

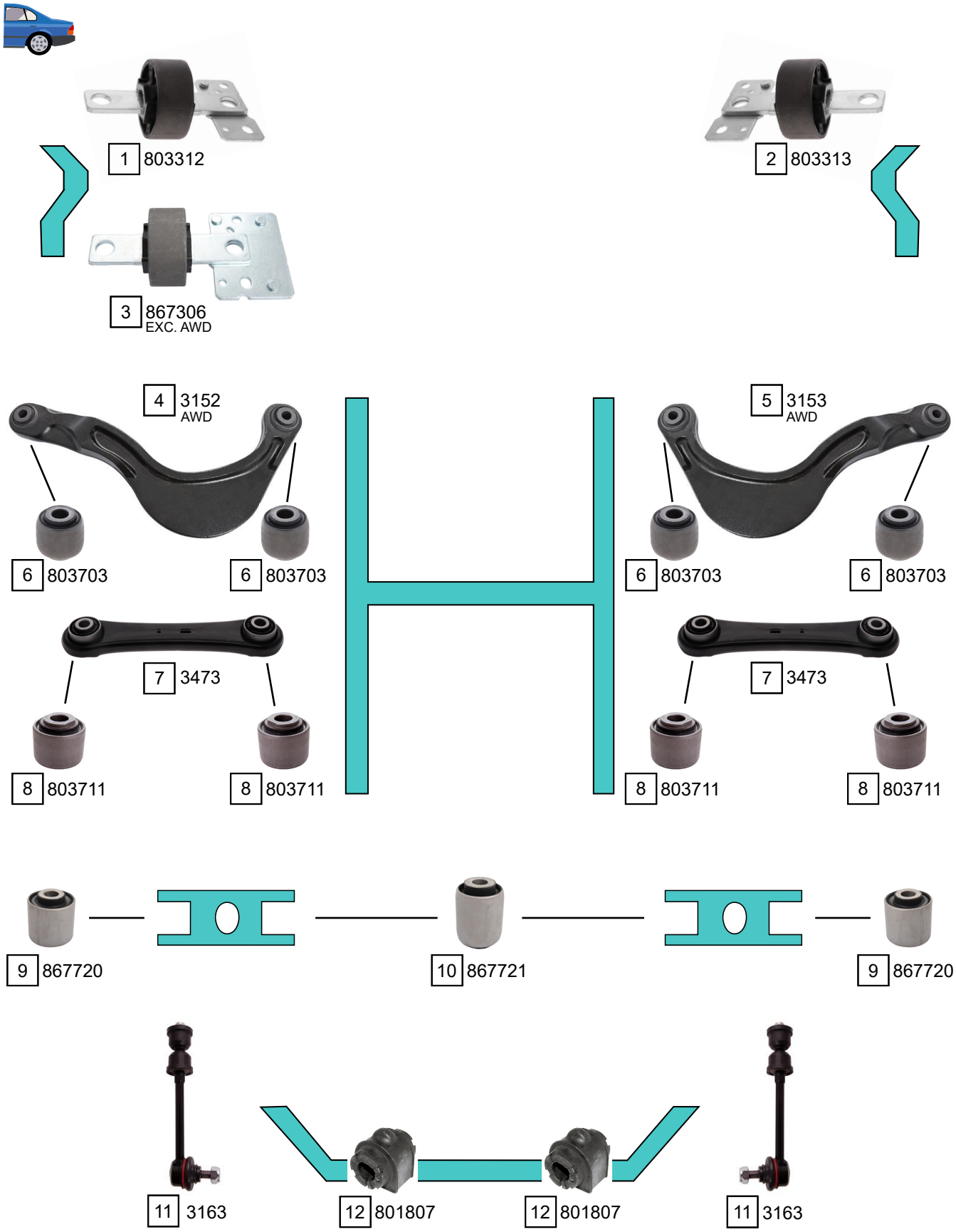

Ref.	Sidem Ref.	Description	OE-number	Measures	Ref.	Sidem Ref.	Description	OE-number	Measures
1	803312	mounting axle body	31 406 337	do:90	7	3473	track rod	31 262 930	L:195
2	803313	mounting axle body	31 406 350	do:90	8	803711	silentblock for TCA	Part of	di:12.1 do:36 (*)
3	867306	mounting axle body	31 387 282	do:90	9	867720	silentblock for TCA	31 451 815	di:12.3 do:40.3 (*)
4	3152	track rod	31 406 746	L:332	10	867721	silentblock for TCA	31 451 814	di:12.3 do:38.3 (*)
5	3153	track rod	31 406 747	L:332	11	3163	stabiliser link rear axle	31 476 579	L:180
6	803703	silentblock for TCA	Part of	di:12.2 do:36.2 (*)	12	801807	stabiliser mounting	30 748 926	di:16.5

Copyright 2021

S90 I 01/1997 - 12/1998
V90 I 01/1997 - 12/1998

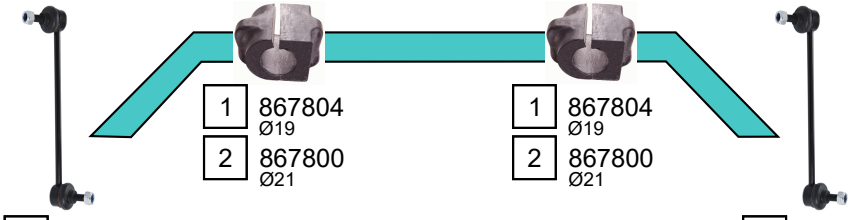

TRW

4 315.132 4 315.132

5 67132

5 67132

CAM

6 67634 8 67138 A 8 67138 A 7 67635

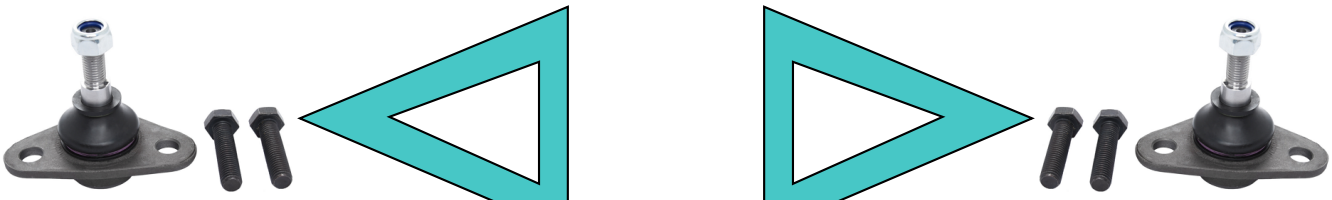

9 67184 9 67184

Ref.	Sidem Ref.	Description	OE-number	Measures	Ref.	Sidem Ref.	Description	OE-number	Measures
1	867804	stabiliser mounting	1 229 389	di:19	6	67634	tie rod end left	271 598	c:13.1 th:F M14X2R
2	867800	stabiliser mounting	1 273 184	di:21	7	67635	tie rod end right	271 599	c:13.1 th:FM14X2R
3	67066	stabiliser link	272 991	L:245	8	67138 A	axial joint	9 140 504	th:MM14X1.5R L:292
4	315.132	steering rack gaiter	272 418	D:50 d:14 L:204	9	67184	ball joint lower	270 477	c:15.5
5	67132	tie rod end	3 516 944	c:12.8 th:FM14X2R					

Copyright 2021

VOLVO
S90 - V90

S90 II 03/2016 ->
V90 II 03/2016 ->

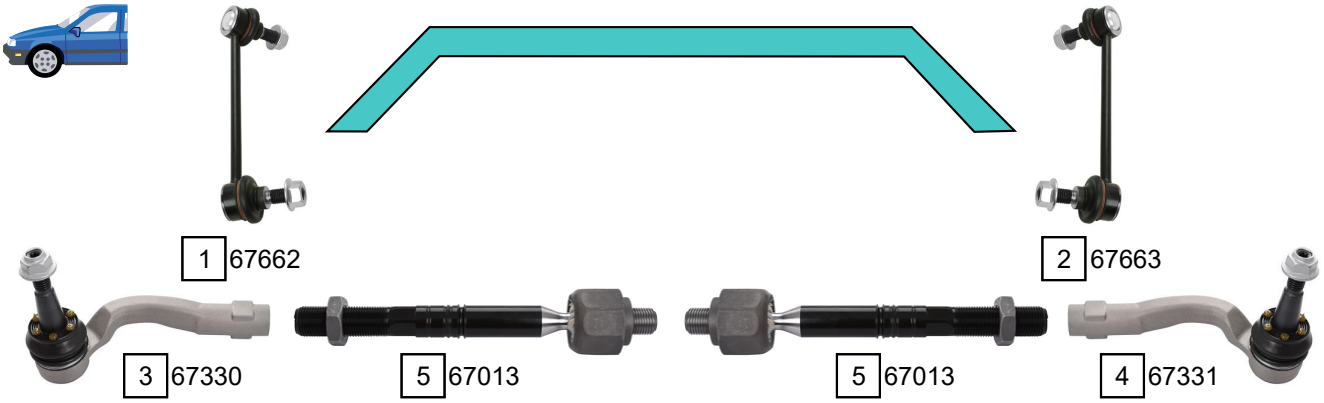

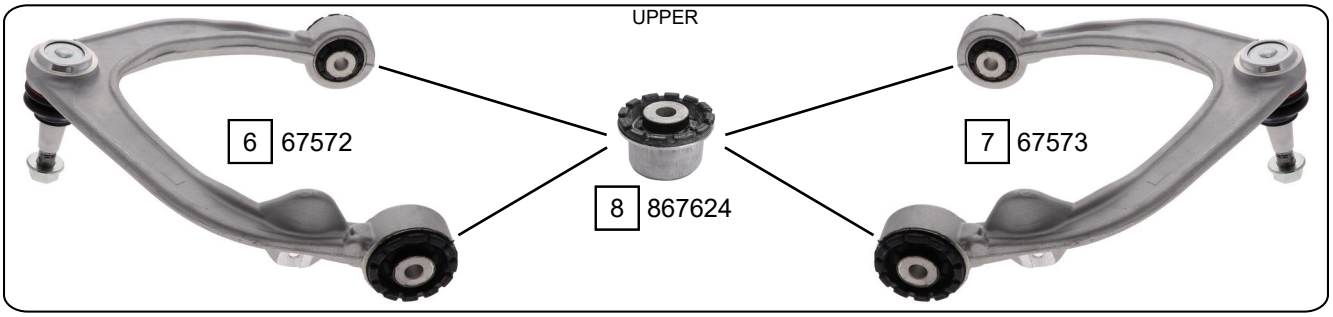

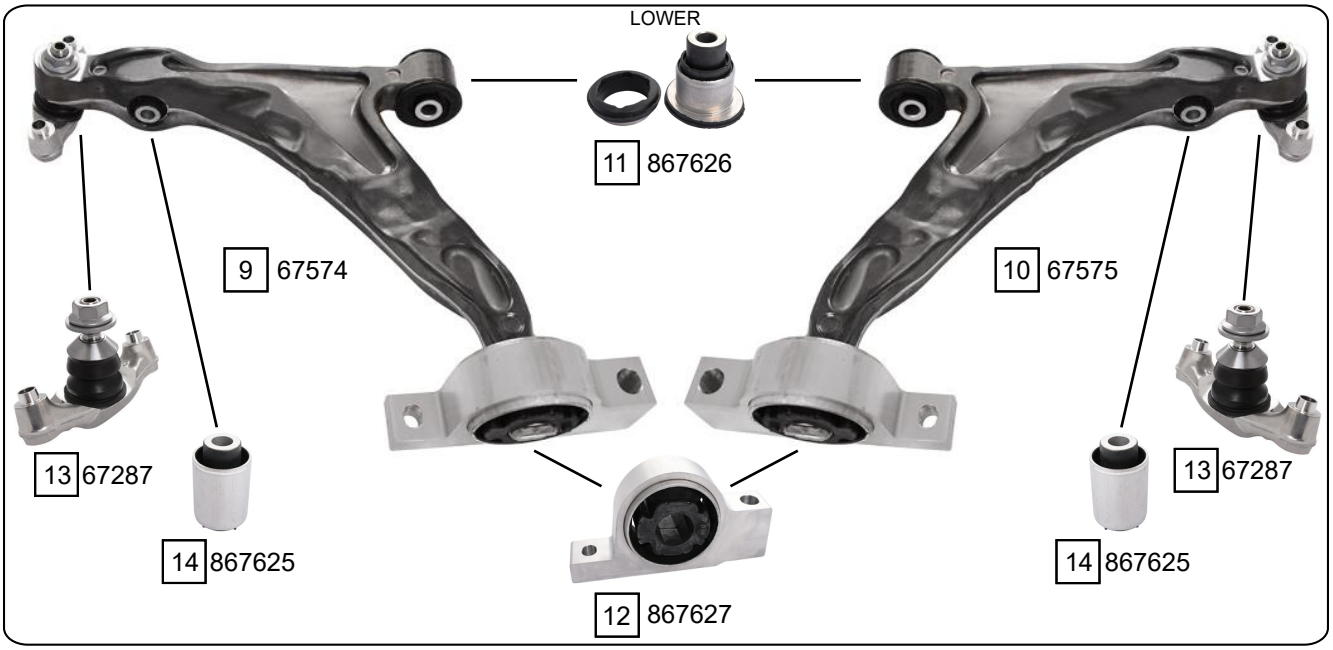

Ref.	Sidem Ref.	Description	OE-number	Measures	Ref.	Sidem Ref.	Description	OE-number	Measures
1	67662	stabiliser link left	31 406 873	L:180	9	67574	TCA left wbj	31 360 831	c:20.4
2	67663	stabiliser link right	31 406 874	L:180	10	67575	TCA right wbj	31 360 832	c:20.4
3	67330	tie rod end left	31 658 181	c:13.7 th:FM18.1.5R	11	867626	silentblock for TCA	31 451 003	di:14.1 do:44.1 (*)
4	67331	tie rod end right	31 658 182	c:13.7 th:FM18.1.5R	12	867627	silentblock for TCA	31 451 032	di:27 do:79.5 (*)
5	67013	axial joint	Part of	th:MM16X1.5R L:192	13	67287	ball joint	32 221 192	c:19.4
6	67572	TCA left wbj	31 360 836	c:14	14	867625	silentblock for TCA	31 360 646	di:14.1 do:40.1 (*)
7	67573	TCA right wbj	31 360 837	c:14	15	867630 KIT	silentblock kit	31 451 032 S1	
8	867624	silentblock for TCA	Part of	di:10 do:40 (*)					

Copyright 2021

S90 II 03/2016 ->
V90 II 03/2016 ->

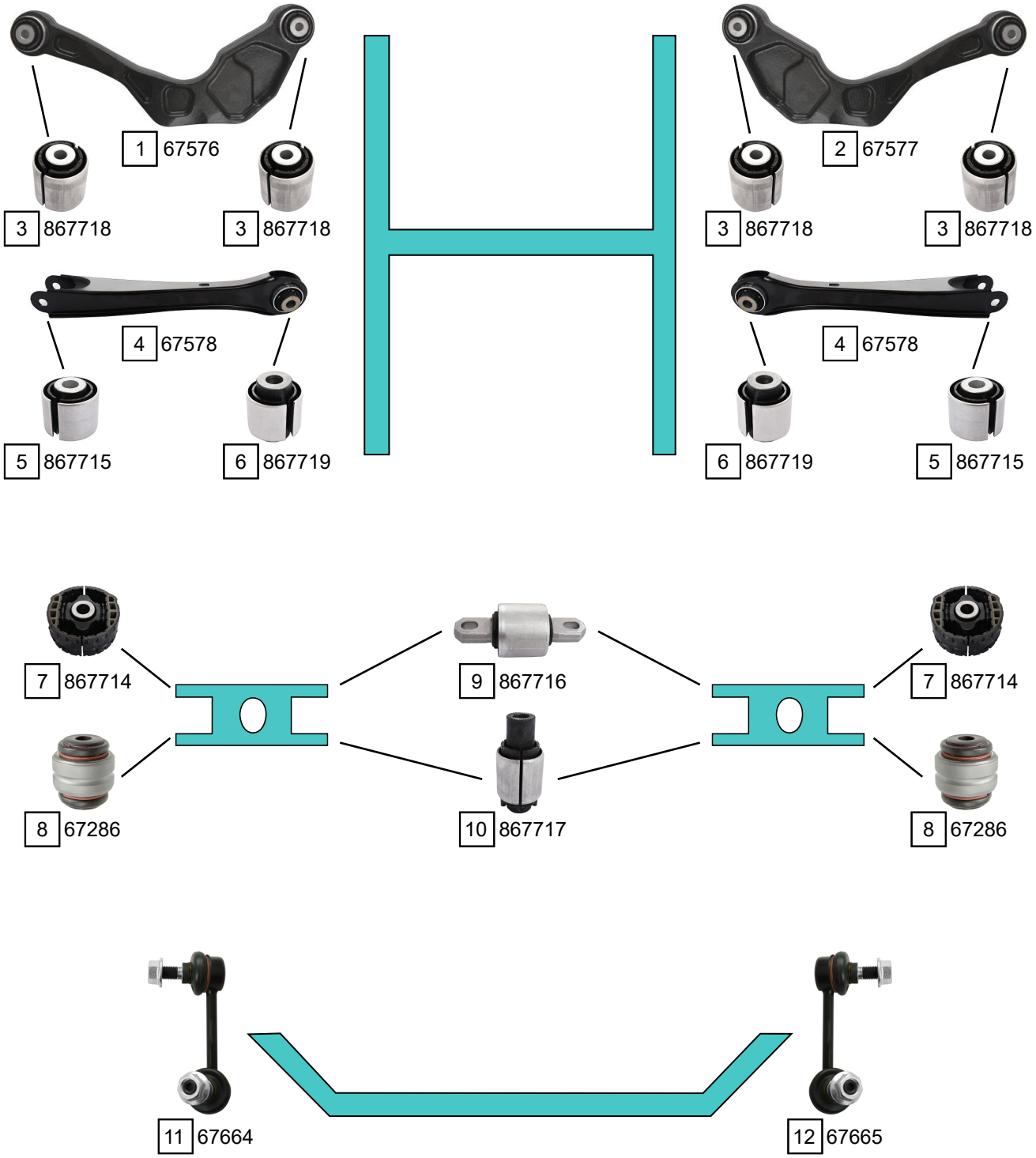

Ref.	Sidem Ref.	Description	OE-number	Measures	Ref.	Sidem Ref.	Description	OE-number	Measures
1	67576	track rod	31 360 865	L:330	7	867714	silentblock for TCA	31 360 595	di:14.1 do:77 (*)
2	67577	track rod	31 360 866	L:330	8	67286	ball joint rear	31 360 583	di:12.1 do:47.1
3	867718	silentblock for TCA	Part of	di:10.3 do:44 (*)	9	867716	silentblock for TCA	31 360 581	do:60.4 (*)
4	67578	track rod	31 387 207	L:330	10	867717	silentblock for TCA	31 360 582	di:14.3 do:43.6 (*)
5	867715	silentblock for TCA	31 360 590	di:14.1 do:42 (*)	11	67664	stabiliser link left	31 387 674	L:100
6	867719	silentblock for TCA	Part of	di:12.3 do:40 (*)	12	67665	stabiliser link right	31 387 675	L:100

Copyright 2021

VOLVO
V90

V90 CROSS COUNTRY 10/2016 ->

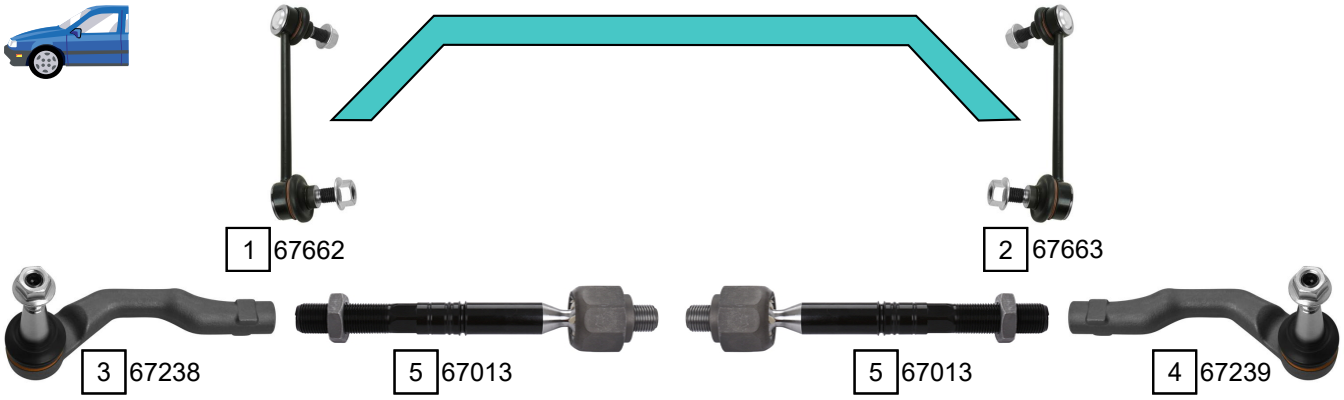

UPPER

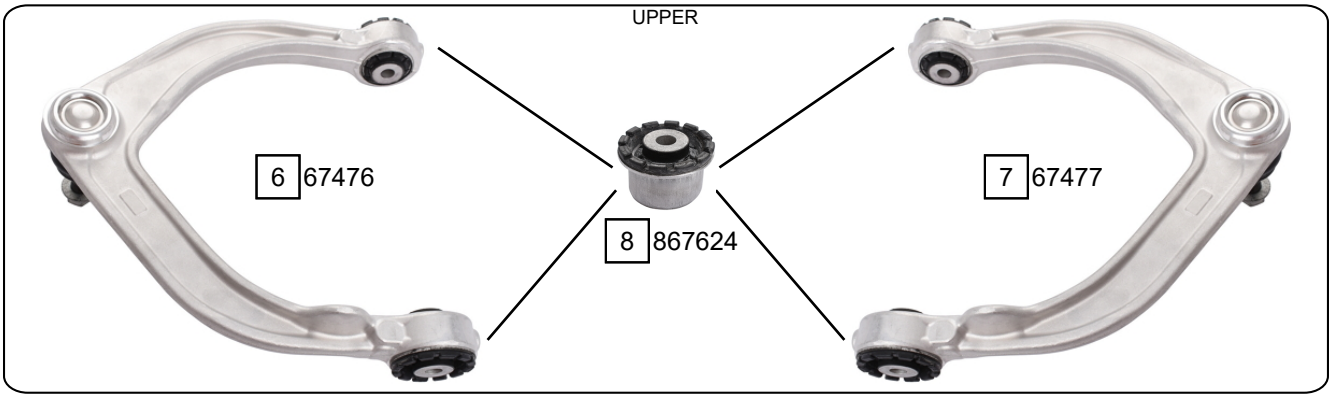

LOWER

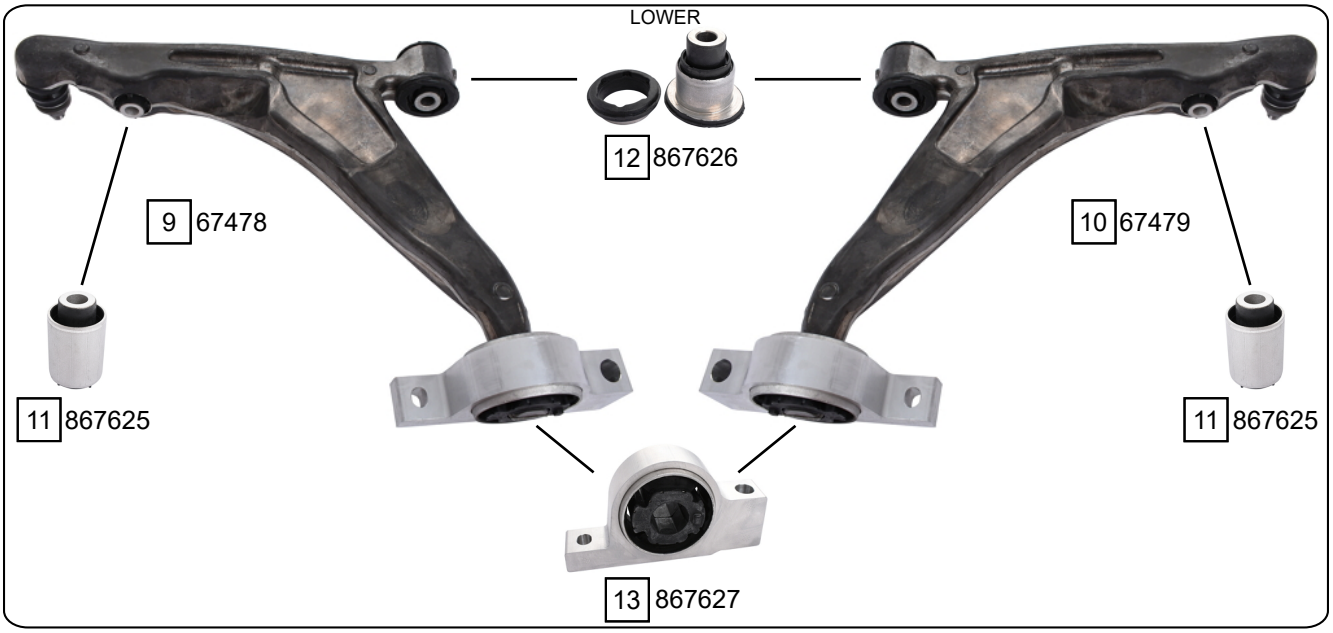

Ref.	Sidem Ref.	Description	OE-number	Measures	Ref.	Sidem Ref.	Description	OE-number	Measures
1	67662	stabiliser link left	31 406 873	L:180	8	867624	silentblock for TCA	Part of	di:10 do:40 (*)
2	67663	stabiliser link right	31 406 874	L:180	9	67478	TCA left wbj	31 360 644	c:19.3
3	67238	tie rod end left	31 476 415	c:13.6 th:FM18X1.5R	10	67479	TCA right wbj	31 360 651	c:19.3
4	67239	tie rod end right	31 476 416	c:13.6 th:FM18X1.5R	11	867625	silentblock for TCA	31 360 646	di:14.1 do:40.1 (*)
5	67013	axial joint	Part of	th:MM16X1.5R L:192	12	867626	silentblock for TCA	31 451 003	di:14.1 do:44.1 (*)
6	67476	TCA left wbj	31 360 630	c:13.8	13	867627	silentblock for TCA	31 451 032	di:27 do:79.5 (*)
7	67477	TCA right wbj	31 360 633	c:13.8	14	867630 KIT	silentblock kit	31 451 032 S1	

Copyright 2021

V90 CROSS COUNTRY 10/2016 ->

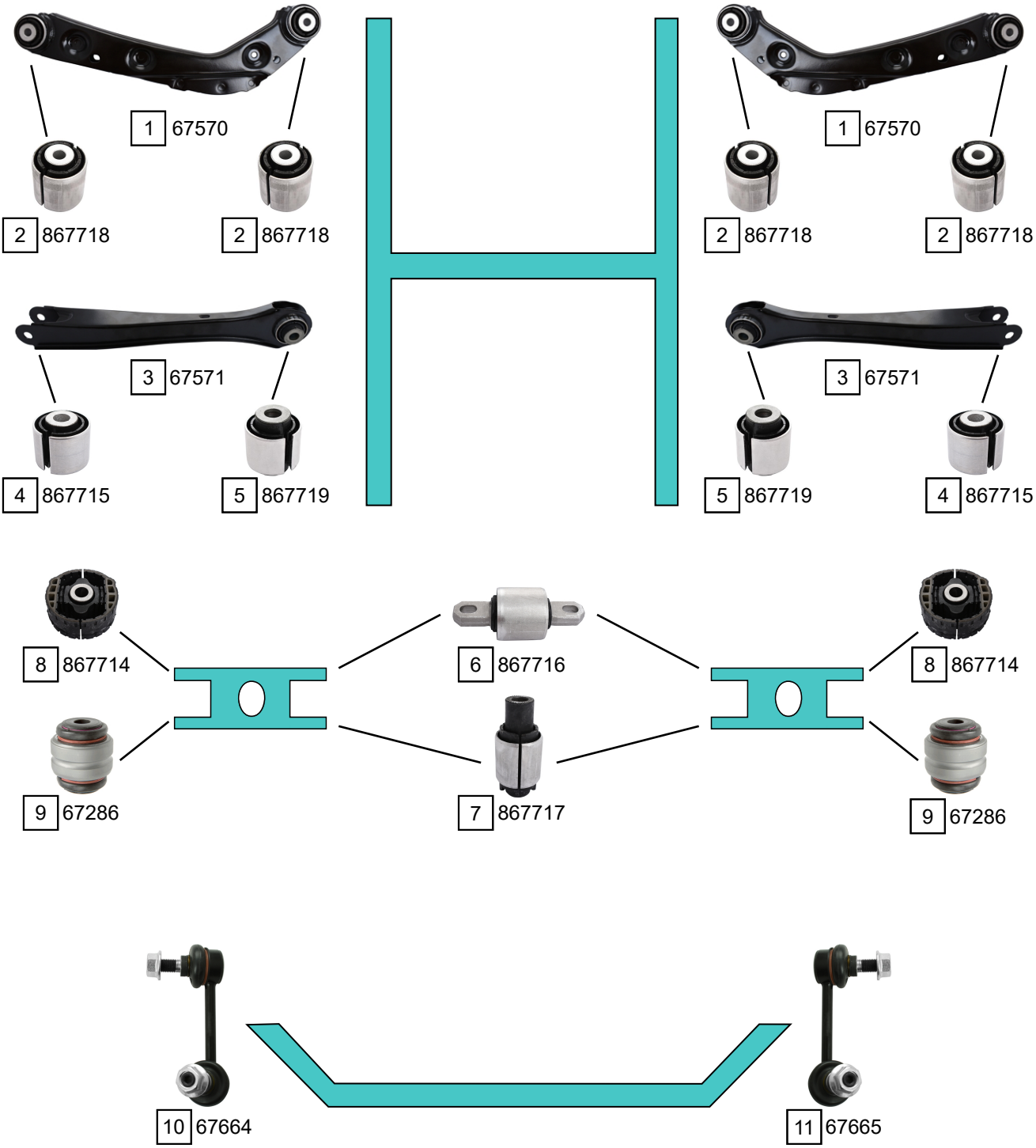

Ref.	Sidem Ref.	Description	OE-number	Measures	Ref.	Sidem Ref.	Description	OE-number	Measures
1	67570	track rod	31 360 584	L:365	7	867717	silentblock for TCA	31 360 582	di:14.3 do:43.6 (*)
2	867718	silentblock for TCA	Part of	di:10.3 do:44 (*)	8	867714	silentblock for TCA	31 360 595	di:14.1 do:77 (*)
3	67571	track rod	31 360 588	L:350	9	67286	ball joint rear	31 360 583	di:12.1 do:47.1
4	867715	silentblock for TCA	31 360 590	di:14.1 do:42 (*)	10	67664	stabiliser link left	31 387 674	L:100
5	867719	silentblock for TCA	Part of	di:12.3 do:40 (*)	11	67665	stabiliser link right	31 387 675	L:100
6	867716	silentblock for TCA	31 360 581	do:60.4 (*)					

Copyright 2021

VOLVO
XC40

XC40 10/2017 ->

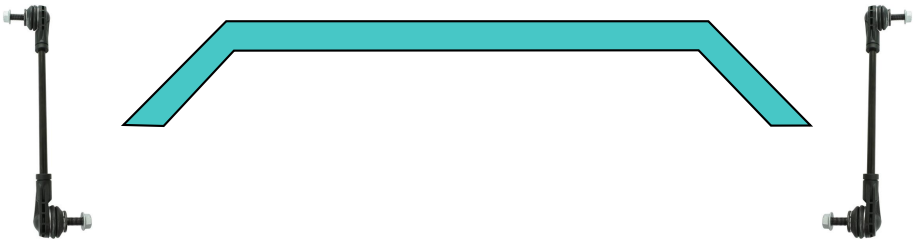

1 67161

1 67161

2 67332

4 67618

4 67618

3 67333

7 867628

5 67670

6 67671

8 867629

9 67288

10 67289

Ref.	Sidem Ref.	Description	OE-number	Measures	Ref.	Sidem Ref.	Description	OE-number	Measures
1	67161	stabiliser link	32 221 271	L:277	6	67671	TCA right wbj	32 221 282	c:21
2	67332	tie rod end left	32 283 513	c:12.2 th:FM14X1.5R	7	67288	ball joint left	Part of	c:21
3	67333	tie rod end right	32 283 514	c:12.2 th:FM14X1.5R	8	67289	ball joint right	Part of	c:21
4	67618	axial joint	Part of	th:MM16x1.5R L:208	9	867628	silentblock for TCA	32 221 285	di:14.3 do:45.15 (*)
5	67670	TCA left wbj	32 221 283	c:21	10	867629	silentblock for TCA	32 221 286	di:14.1 do:65.2 (*)

Copyright 2021

VOLVO
XC40

XC40 10/2017 ->

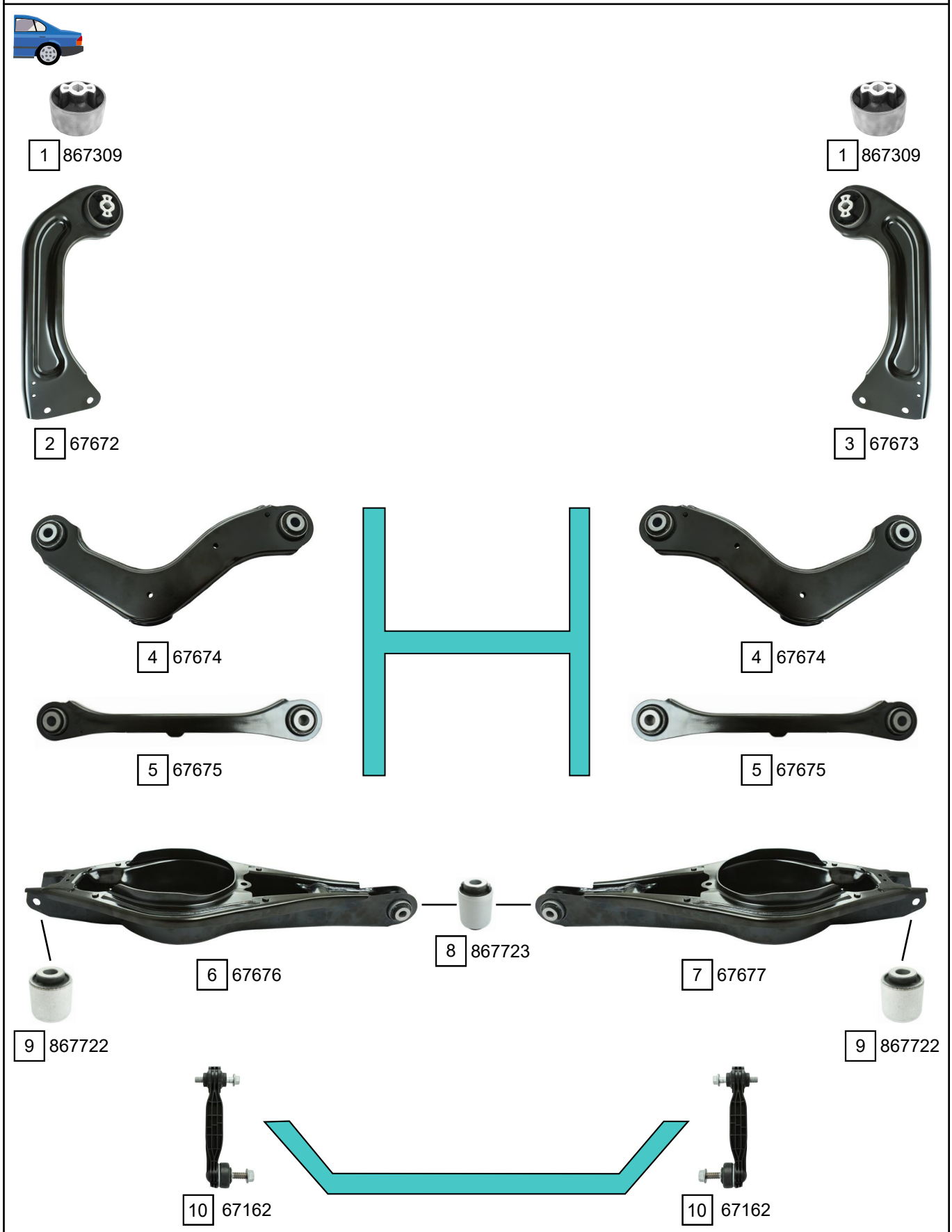

Ref.	Sidem Ref.	Description	OE-number	Measures	Ref.	Sidem Ref.	Description	OE-number	Measures
1	867309	mounting axle body	Part of	di:14.1 do:72.15	6	67676	TCA left	32 221 199	L:580
2	67672	TCA left	32 221 934		7	67677	TCA right	32 221 200	L:580
3	67673	TCA right	32 221 936		8	867722	silentblock for TCA	32 221 447	di:12.2 do:37.1 (*)
4	67674	track rod	32 221 134	L:308	9	867723	silentblock for TCA	32 221 198	di:12.2 do:36.3 (*)
5	67675	track rod	31 221 140	L:292	10	67162	stabiliser link	32 221 272	L:145

Copyright 2021

VOLVO
XC60

XC60 05/2008 - 02/2017

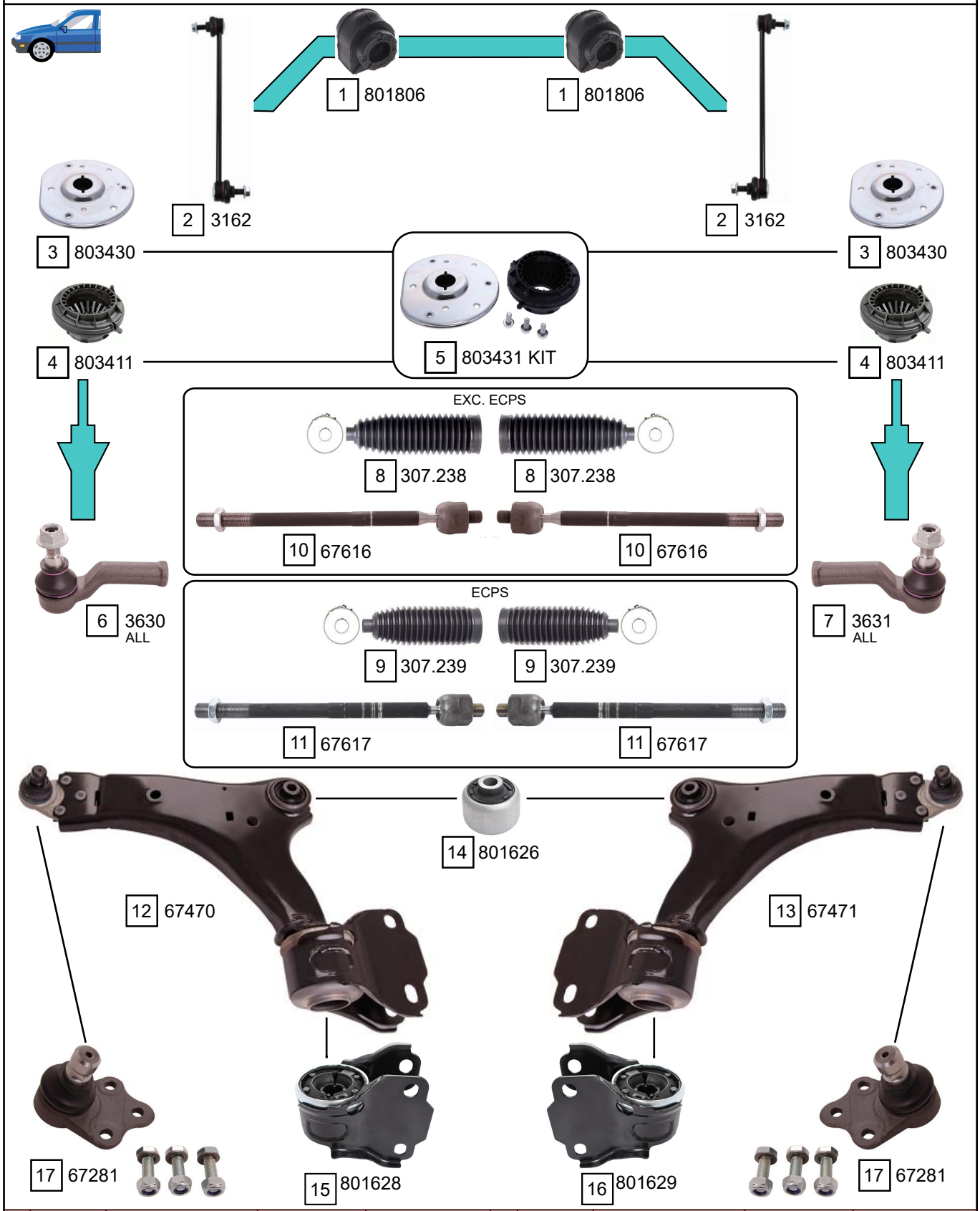

Ref.	Sidem Ref.	Description	OE-number	Measures	Ref.	Sidem Ref.	Description	OE-number	Measures
1	801806	stabiliser mounting	31 387 505	di:22	10	67616	axial joint	31 280 409	th:MM16x1.5R L:330
2	3162	stabiliser link	31 658 608	L:298	11	67617	axial joint	31 280 408	th:MM16x1.5R L:318
3	803430	strut mount	31 340 606	do:164.2 L:48.2	12	67470	TCA left wbj	31 317 665	c:22
4	803411	bearing	31 277 826	di:35 do:82 L:68.5	13	67471	TCA right wbj	31 317 666	c:22
5	803431 KIT	strut mount kit	31 340 606 S1	do:164.2 L:48.2	14	801626	silentblock for TCA	Part of	di:14.3 do:61 (*)
6	3630	tie rod end left	31 302 344	c:16.7 th:FM18X1.5R	15	801628	silentblock for TCA left	31 387 571	di:22 do:22 (*)
7	3631	tie rod end right	31 302 345	c:16.7 th:FM18X1.5R	16	801629	silentblock for TCA right	31 387 572	di:22 do:22 (*)
8	307.238	steering rack gaiter	30 776 251	D:52 d:16 L:194	17	67281	ball joint	Part of	c:22
9	307.239	steering rack gaiter	30 776 252	D:52 d:17.5 L:184					

Copyright 2021

VOLVO
XC60

XC60 | 05/2008 - 02/2017

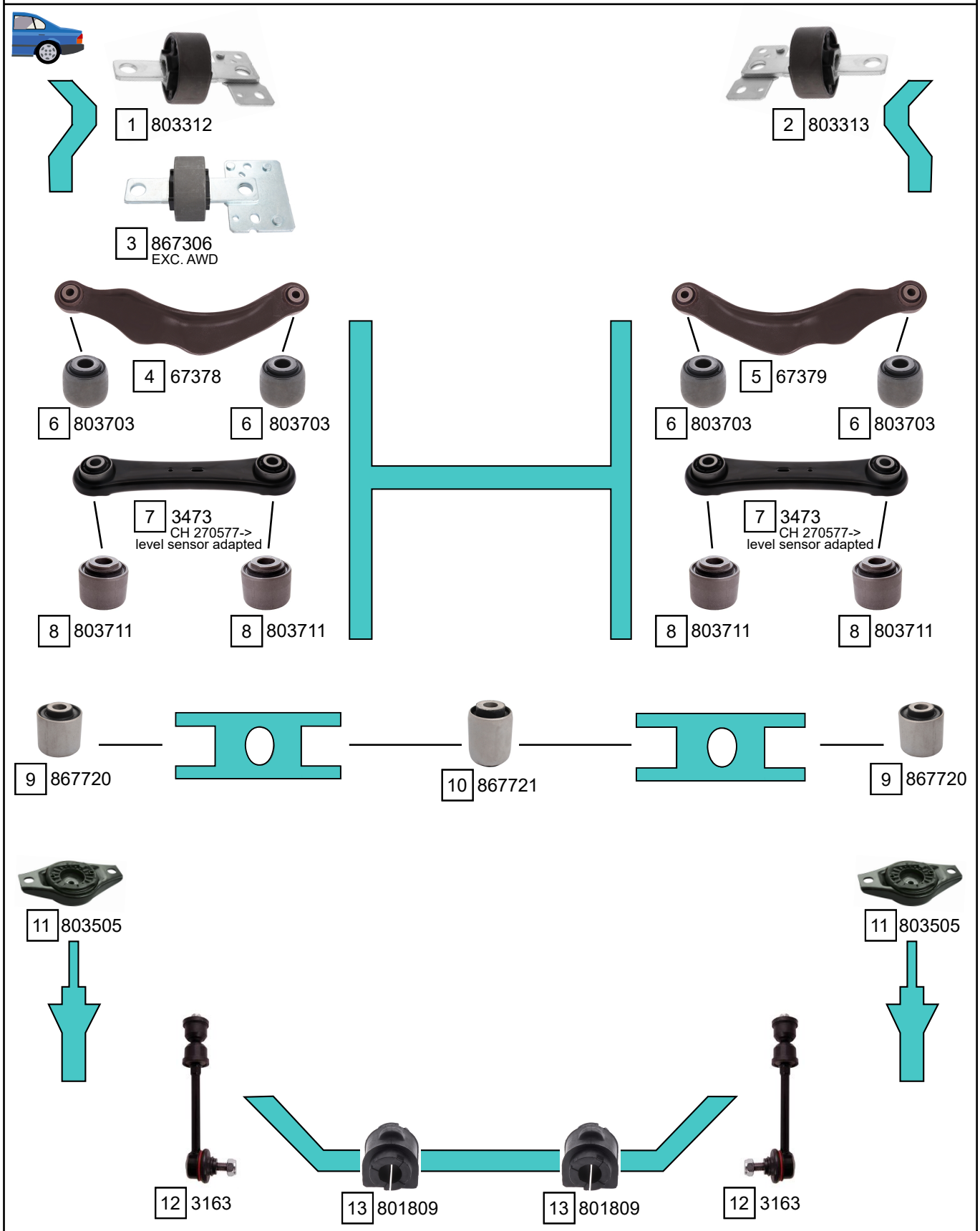

Ref.	Sidem Ref.	Description	OE-number	Measures	Ref.	Sidem Ref.	Description	OE-number	Measures
1	803312	mounting axle body	31 406 337	do:90	8	803711	silentblock for TCA	Part of	di:12.1 do:36 (*)
2	803313	mounting axle body	31 406 350	do:90	9	867720	silentblock for TCA	31 451 815	di:12.3 do:40.3 (*)
3	867306	mounting axle body	31 387 282	do:90	10	867721	silentblock for TCA	31 451 814	di:12.3 do:38.3 (*)
4	67378	track rod	31 406 748	L:333	11	803505	strut mount	31 317 461	di:8.4 L:33.5
5	67379	track rod	31 406 749	L:333	12	3163	stabiliser link rear axle	31 476 579	L:180
6	803703	silentblock for TCA	Part of	di:12.2 do:36.2 (*)	13	801809	stabiliser mounting	30 748 927	di:17.5
7	3473	track rod	31 262 930	L:195					

Copyright 2021

VOLVO
XC60

XC60 II 03/2017 ->

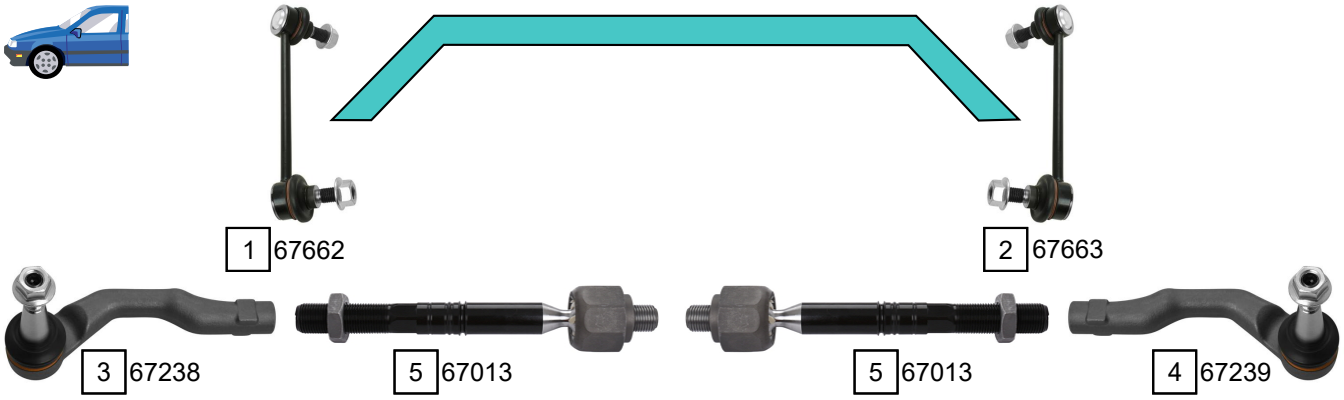

UPPER

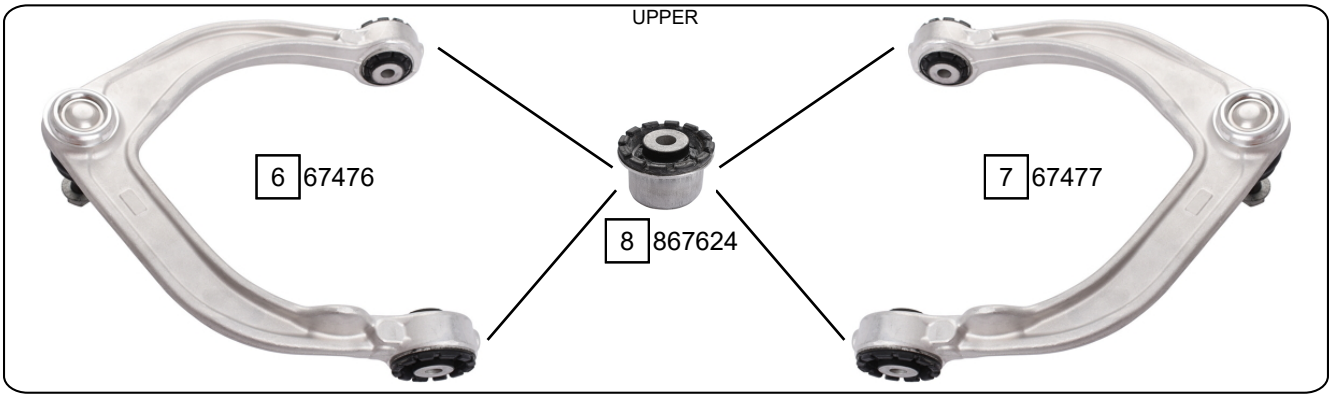

LOWER

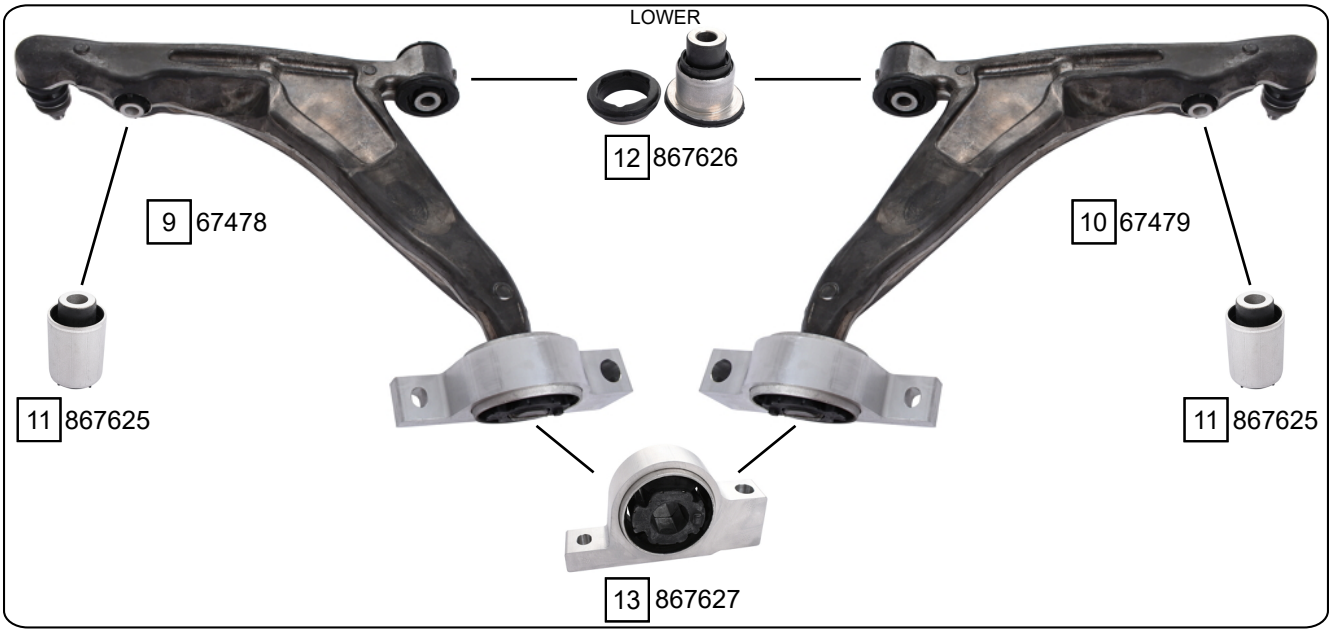

Ref.	Sidem Ref.	Description	OE-number	Measures	Ref.	Sidem Ref.	Description	OE-number	Measures
1	67662	stabiliser link left	31 406 873	L:180	8	867624	silentblock for TCA	Part of	di:10 do:40 (*)
2	67663	stabiliser link right	31 406 874	L:180	9	67478	TCA left wbj	31 360 644	c:19.3
3	67238	tie rod end left	31 476 415	c:13.6 th:FM18X1.5R	10	67479	TCA right wbj	31 360 651	c:19.3
4	67239	tie rod end right	31 476 416	c:13.6 th:FM18X1.5R	11	867625	silentblock for TCA	31 360 646	di:14.1 do:40.1 (*)
5	67013	axial joint	Part of	th:MM16X1.5R L:192	12	867626	silentblock for TCA	31 451 003	di:14.1 do:44.1 (*)
6	67476	TCA left wbj	31 360 630	c:13.8	13	867627	silentblock for TCA	31 451 032	di:27 do:79.5 (*)
7	67477	TCA right wbj	31 360 633	c:13.8	14	867630 KIT	silentblock kit	31 451 032 S1	

Copyright 2021

XC60 II 03/2017 ->

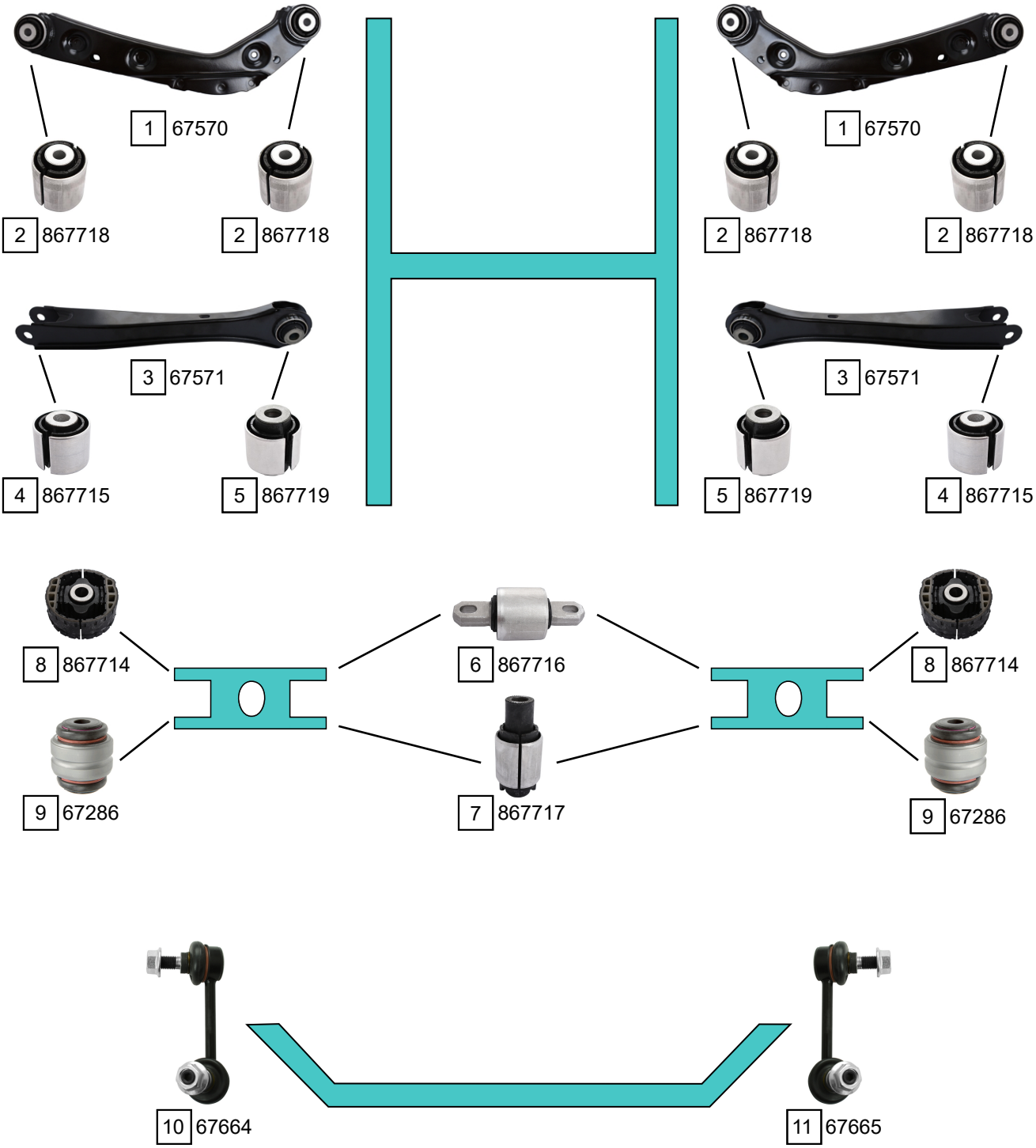

Ref.	Sidem Ref.	Description	OE-number	Measures	Ref.	Sidem Ref.	Description	OE-number	Measures
1	67570	track rod	31 360 584	L:365	7	867717	silentblock for TCA	31 360 582	di:14.3 do:43.6 (*)
2	867718	silentblock for TCA	Part of	di:10.3 do:44 (*)	8	867714	silentblock for TCA	31 360 595	di:14.1 do:77 (*)
3	67571	track rod	31 360 588	L:350	9	67286	ball joint rear	31 360 583	di:12.1 do:47.1
4	867715	silentblock for TCA	31 360 590	di:14.1 do:42 (*)	10	67664	stabiliser link left	31 387 674	L:100
5	867719	silentblock for TCA	Part of	di:12.3 do:40 (*)	11	67665	stabiliser link right	31 387 675	L:100
6	867716	silentblock for TCA	31 360 581	do:60.4 (*)					

Copyright 2021

VOLVO
XC70

SIDEM
Experts know why

XC70 CROSS COUNTRY — 03/2000 - 07/2007

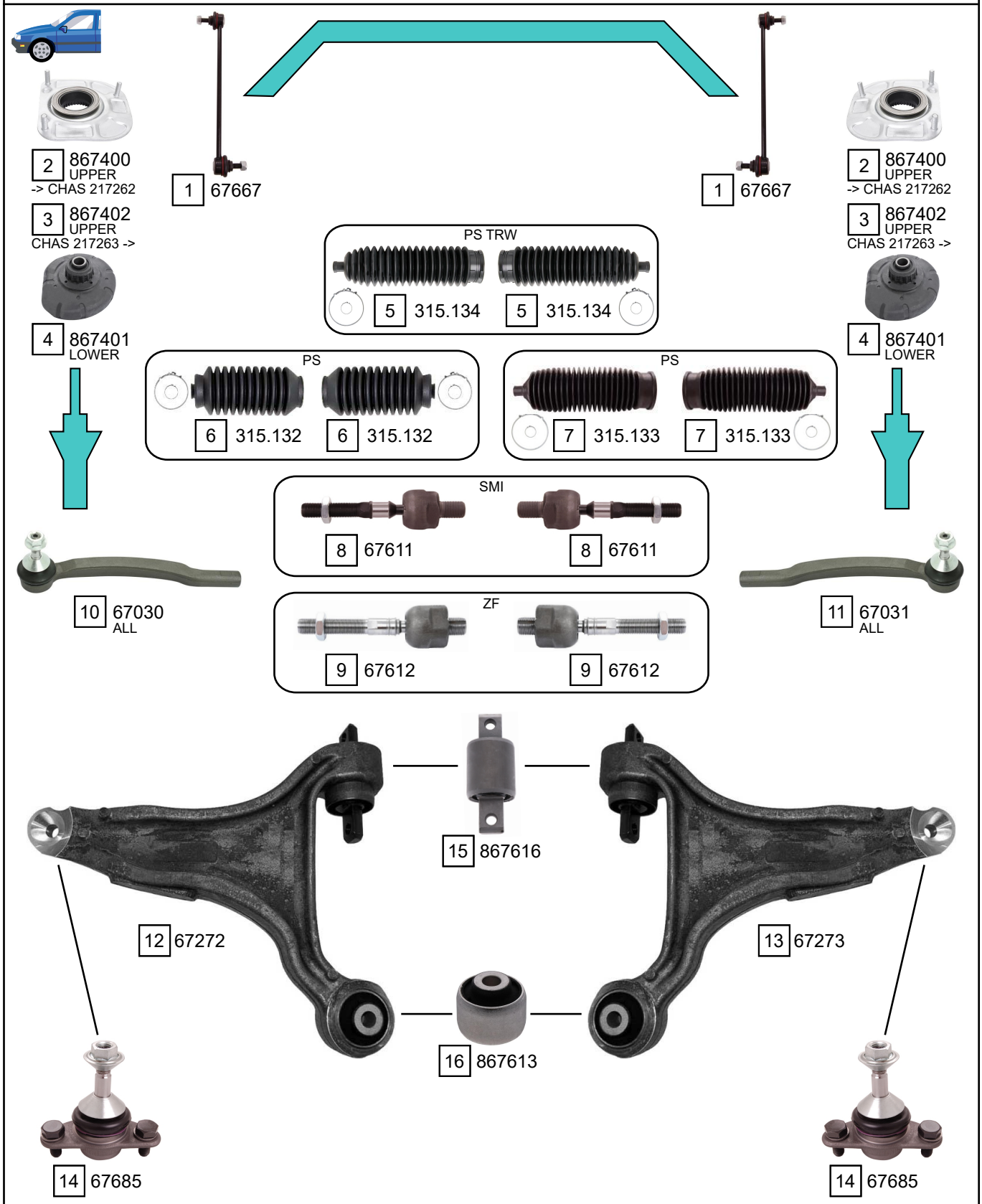

Ref.	Sidem Ref.	Description	OE-number	Measures	Ref.	Sidem Ref.	Description	OE-number	Measures
1	67667	stabiliser link	31 201 602	L:332	9	67612	axial joint	274 353	th:MM16x1.5R L:126
2	867400	strut mount	31 200 599	di:45.1 L:45	10	67030	tie rod end left	30 760 806	c:15 th:FM14X1.5R
3	867402	strut mount	30 714 968	di:45.3 L:27.8	11	67031	tie rod end right	30 776 324	c:15 th:FM14X1.5R
4	867401	strut mount	30 683 637	di:16.5 do:144 L:55	12	67272	TCA left wobj	30 635 231	c:14
5	315.134	steering rack gaiter	9 191 409	D:46 d:13 L:225	13	67273	TCA right wobj	30 635 232	c:14
6	315.132	steering rack gaiter	272 418	D:50 d:14 L:204	14	67685	ball joint	274 548	c:12.7 do:38.3
7	315.133	steering rack gaiter	271 601	D:49 d:13 L:203	15	867616	silentblock for TCA	9 465 971	do:48.3 (*)
8	67611	axial joint	274 179	th:MM16X1.5R L:125	16	867613	silentblock for TCA	8 630 605	di:14.2 do:53.4 (*)

Copyright 2021

XC70 CROSS COUNTRY 03/2000 - 07/2007

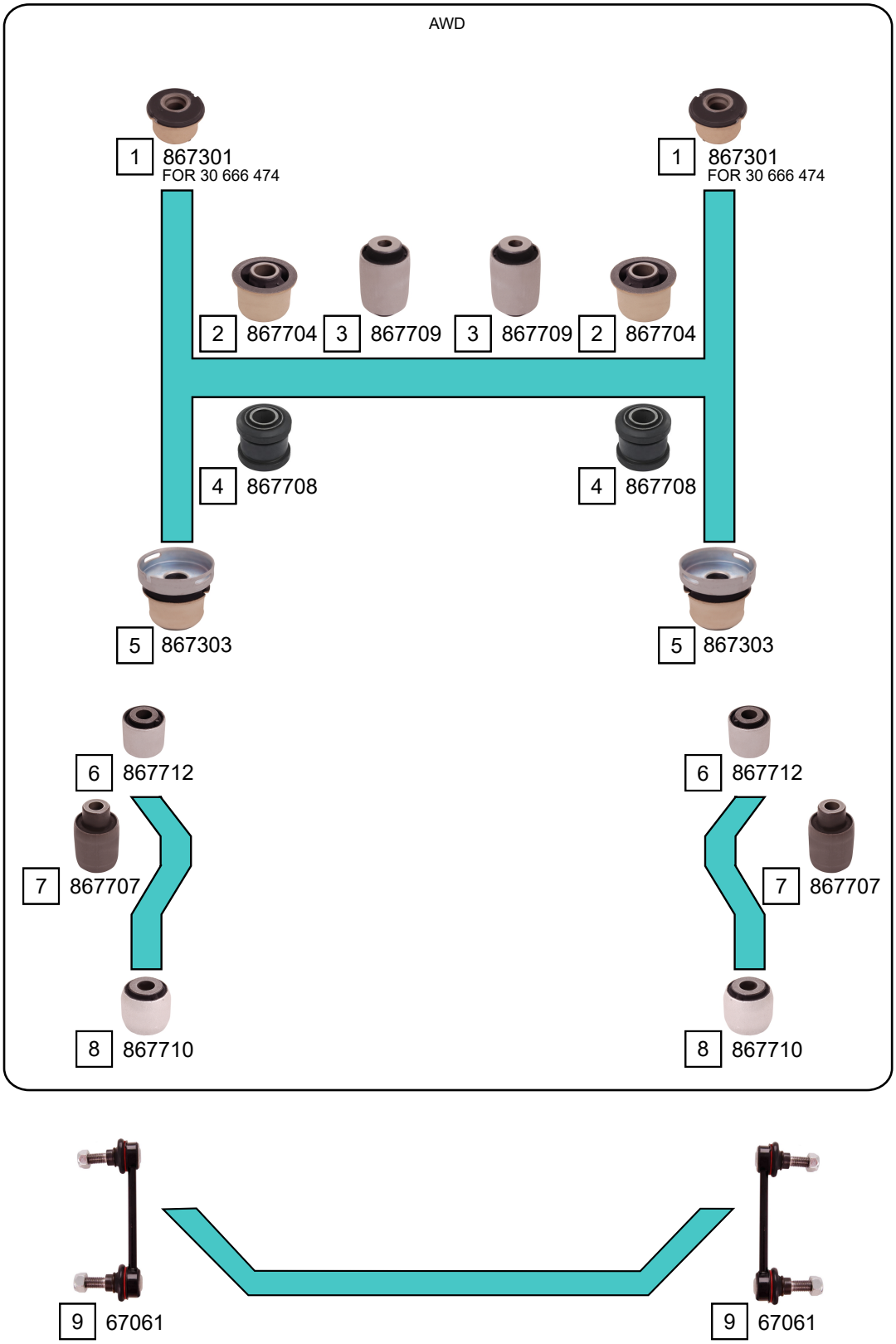

Ref.	Sidem Ref.	Description	OE-number	Measures	Ref.	Sidem Ref.	Description	OE-number	Measures
1	867301	mounting axle body	9 157 576	di:21.9 do:62.6	6	867712	silentblock for TCA	9 127 363	di:12.4 do:34.1 (*)
2	867704	silentblock for TCA	31 277 899	di:20.2 do:53 (*)	7	867707	silentblock for TCA	31 277 993	di:12.2 do:40.1 (*)
3	867709	silentblock for TCA	30 748 889	di:12.2 do:45.1 (*)	8	867710	silentblock for TCA	31 277 952	di:12.4 do:36 (*)
4	867708	silentblock for TCA	9 173 761	di:20.2 do:43 (*)	9	67061	stabiliser link rear axle	31 201 603	L:140
5	867303	mounting axle body	30 714 032	di:23.5 do:63					

Copyright 2021

VOLVO
XC70

XC70 II — 08/2007 - 05/2016

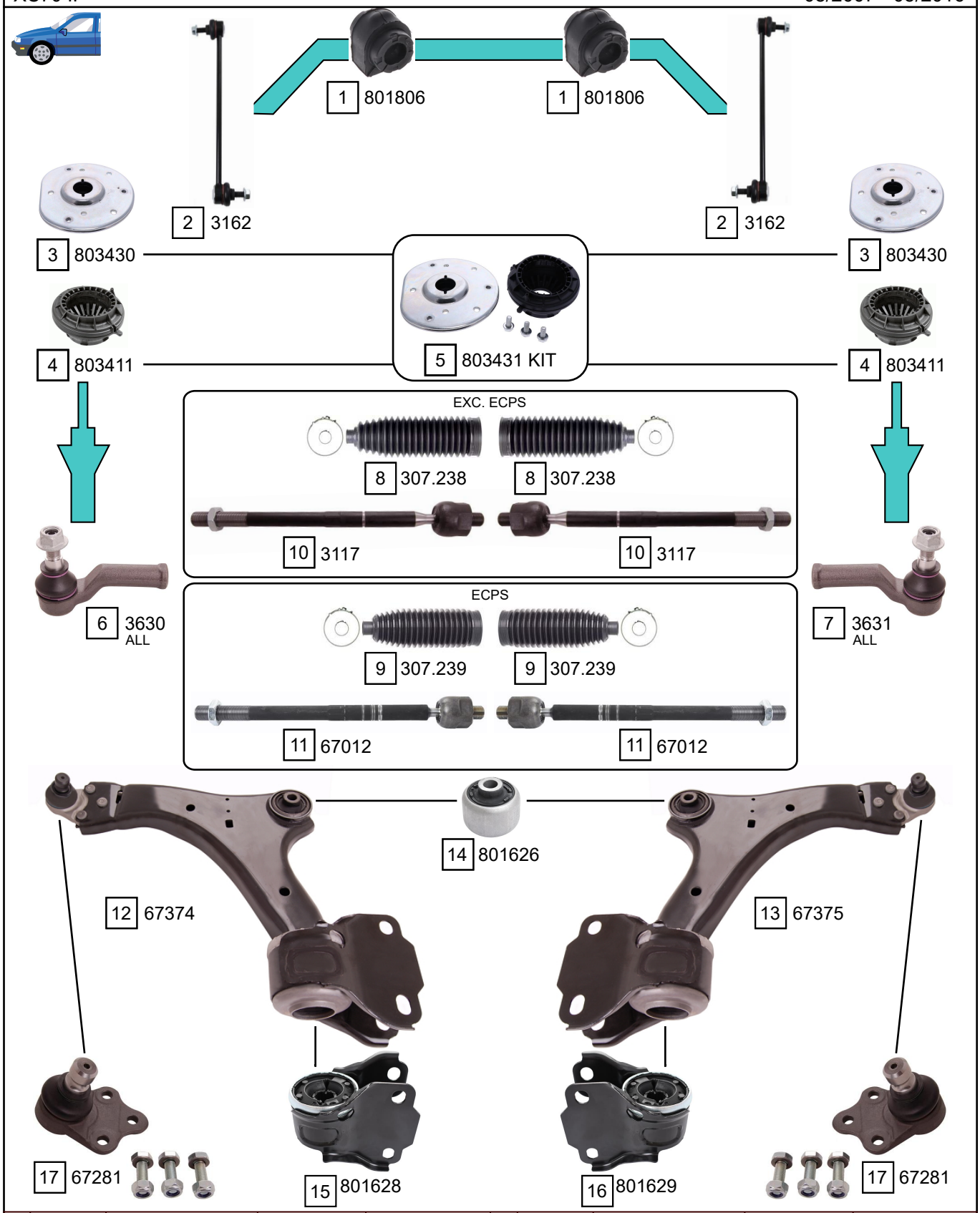

Ref.	Sidem Ref.	Description	OE-number	Measures	Ref.	Sidem Ref.	Description	OE-number	Measures
1	801806	stabiliser mounting	31 387 505	di:22	10	3117	axial joint	31 280 658	th:MM16X1.5R L:313
2	3162	stabiliser link	31 658 608	L:298	11	67012	axial joint	30 776 255	th:MM16x1.5R L:303
3	803430	strut mount	31 340 606	do:164.2 L:48.2	12	67374	TCA left wbj	31 317 663	c:22
4	803411	bearing	31 277 826	di:35 do:82 L:68.5	13	67375	TCA right wbj	31 317 664	c:22
5	803431 KIT	strut mount kit	31 340 606 S1	do:164.2 L:48.2	14	801626	silentblock for TCA	Part of	di:14.3 do:61 (*)
6	3630	tie rod end left	31 302 344	c:16.7 th:FM18X1.5R	15	801628	silentblock for TCA left	31 387 571	di:22 do:22 (*)
7	3631	tie rod end right	31 302 345	c:16.7 th:FM18X1.5R	16	801629	silentblock for TCA right	31 387 572	di:22 do:22 (*)
8	307.238	steering rack gaiter	30 776 251	D:52 d:16 L:194	17	67281	ball joint	Part of	c:22
9	307.239	steering rack gaiter	30 776 252	D:52 d:17.5 L:184					

Copyright 2021

VOLVO
XC70

XC70 II | 08/2007 - 05/2016

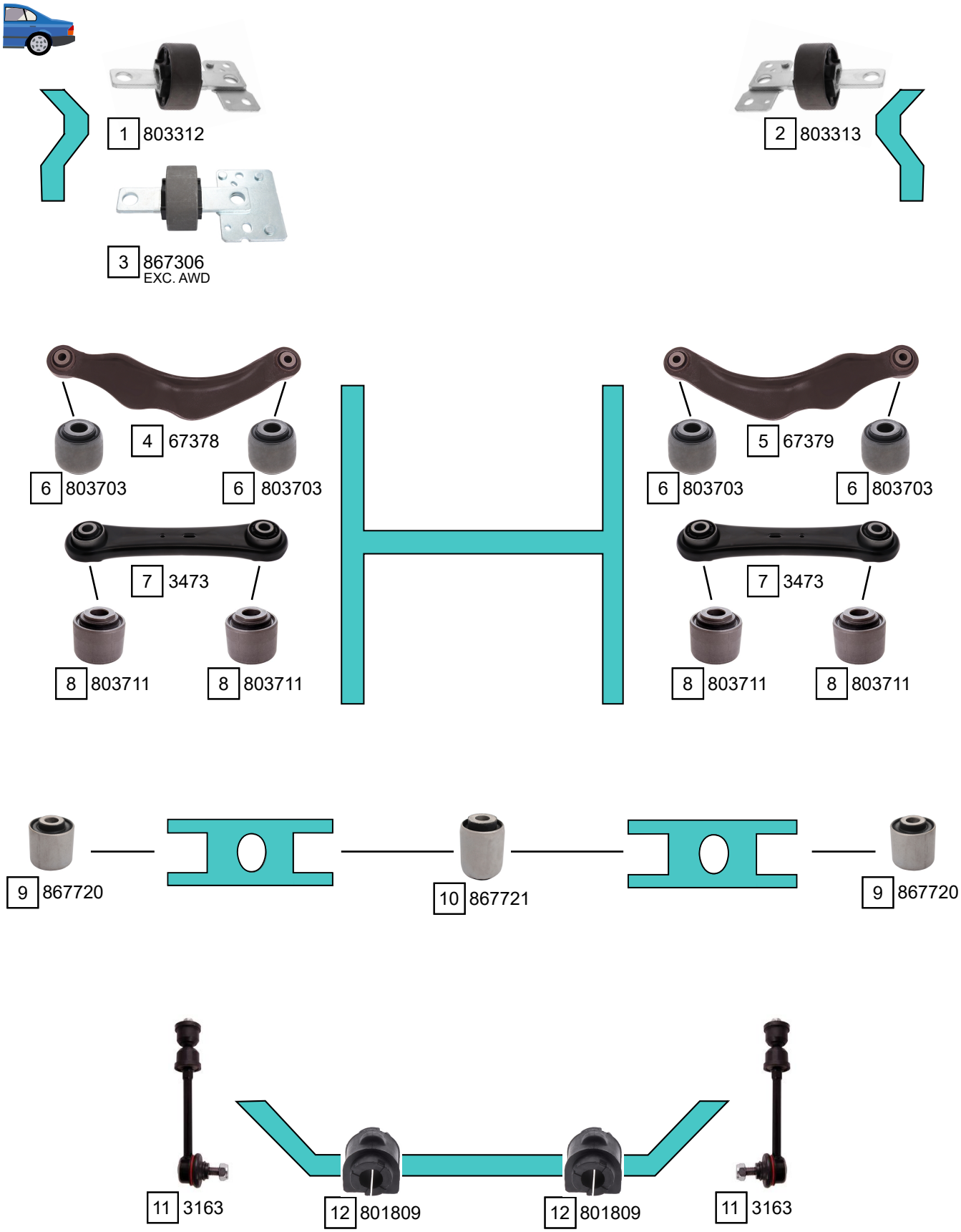

Ref.	Sidem Ref.	Description	OE-number	Measures	Ref.	Sidem Ref.	Description	OE-number	Measures
1	803312	mounting axle body	31 406 337	do:90	7	3473	track rod	31 262 930	L:195
2	803313	mounting axle body	31 406 350	do:90	8	803711	silentblock for TCA	Part of	di:12.1 do:36 (*)
3	867306	mounting axle body	31 387 282	do:90	9	867720	silentblock for TCA	31 451 815	di:12.3 do:40.3 (*)
4	67378	track rod	31 406 748	L:333	10	867721	silentblock for TCA	31 451 814	di:12.3 do:38.3 (*)
5	67379	track rod	31 406 749	L:333	11	3163	stabiliser link rear axle	31 476 579	L:180
6	803703	silentblock for TCA	Part of	di:12.2 do:36.2 (*)	12	801809	stabiliser mounting	30 748 927	di:17.5

Copyright 2021

VOLVO
XC90

SIDEM
Experts know why

XC90 I — 10/2002 - 12/2014

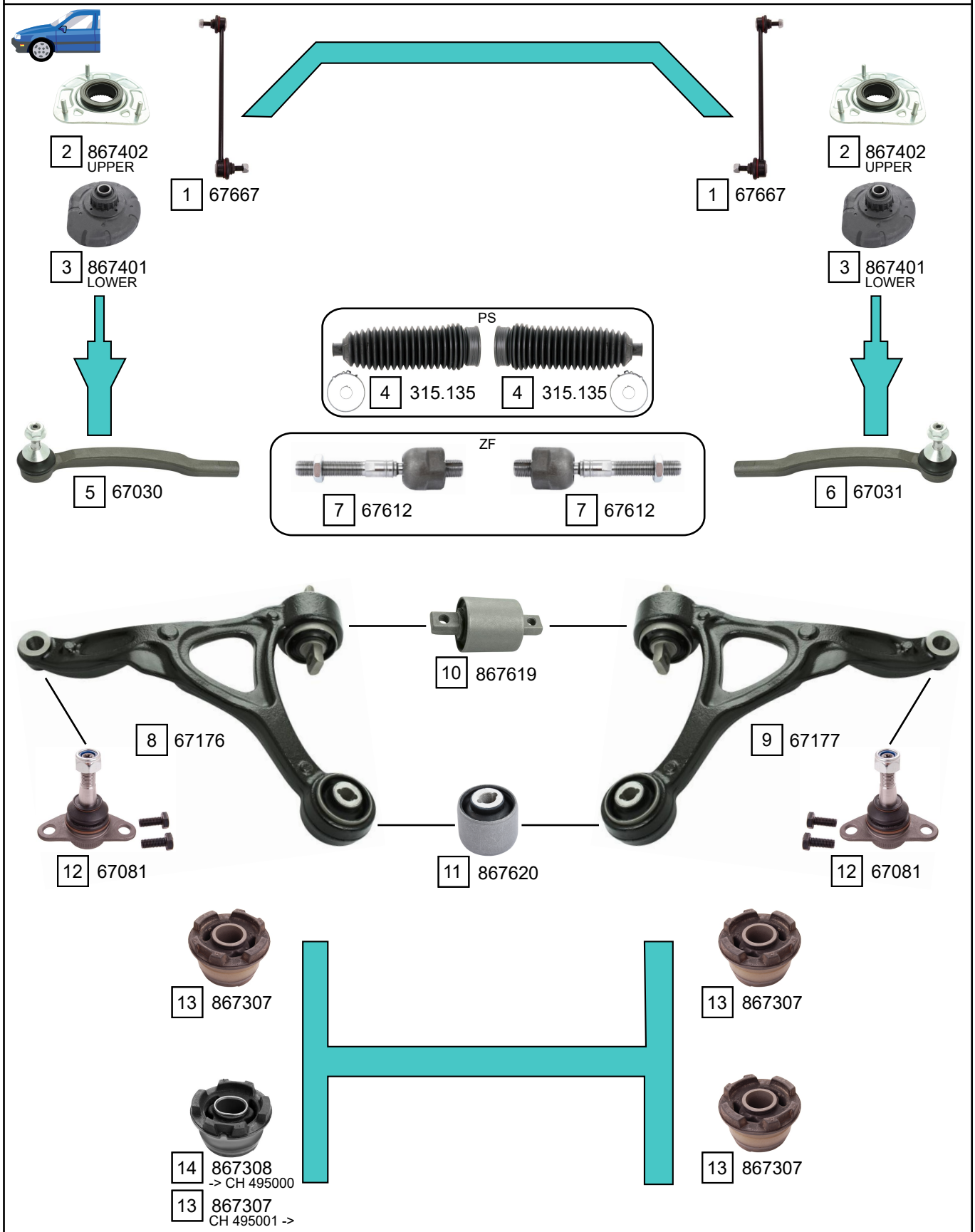

Ref.	Sidem Ref.	Description	OE-number	Measures	Ref.	Sidem Ref.	Description	OE-number	Measures
1	67667	stabiliser link	31 201 602	L:332	8	67176	TCA left wobj	31 304 045	c:14.5
2	867402	strut mount	30 714 968	di:45.3 L:27.8	9	67177	TCA right wobj	31 304 046	c:14.5
3	867401	strut mount	30 683 637	di:16.5 do:144 L:55	10	867619	silentblock for TCA	31 277 881	do:58 (*)
4	315.135	steering rack gaiter	274 354	D:49 d:14 L:205	11	867620	silentblock for TCA	31 304 040	di:14.2 do:53.3 (*)
5	67030	tie rod end left	30 760 806	c:15 th:FM14X1.5R	12	67081	ball joint	31 201 485	c:14.8
6	67031	tie rod end right	30 776 324	c:15 th:FM14X1.5R	13	867307	mounting axle body	3 507 923	di:25.6 do:71.7
7	67612	axial joint	274 353	th:MM16x1.5R L:126	14	867308	mounting axle body	3 507 924	di:24.4 do:74

Copyright 2021

XC90 I 10/2002 - 12/2014

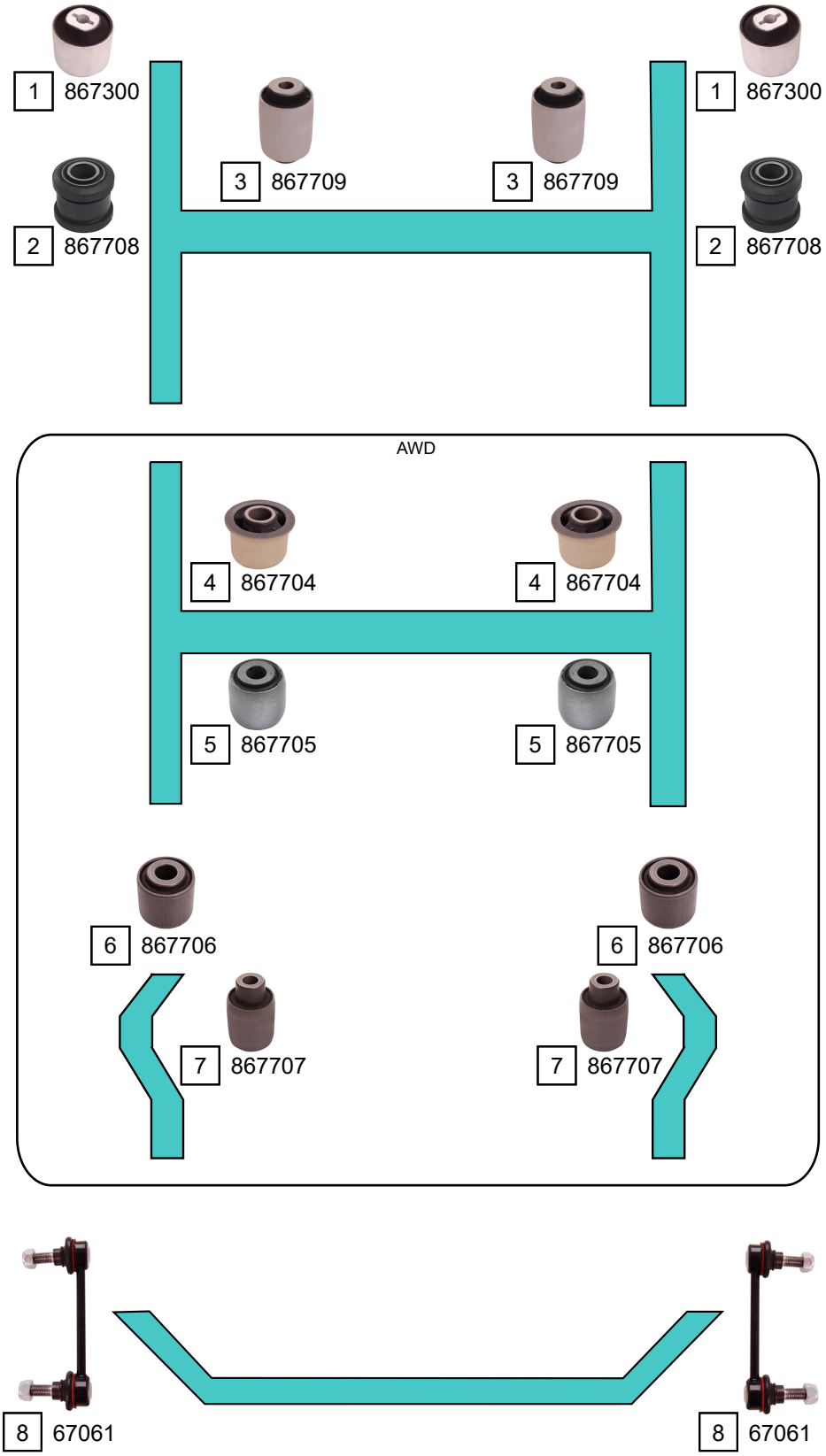

Ref.	Sidem Ref.	Description	OE-number	Measures	Ref.	Sidem Ref.	Description	OE-number	Measures
1	867300	mounting axle body	31 277 893	di:12.4 do:60	5	867705	silentblock for TCA	8 672 223	di:12.5 do:36.1 (*)
2	867708	silentblock for TCA	9 173 761	di:20.2 do:43 (*)	6	867706	silentblock for TCA	8 672 222	di:12.3 do:34.2 (*)
3	867709	silentblock for TCA	30 748 889	di:12.2 do:45.1 (*)	7	867707	silentblock for TCA	31 277 993	di:12.2 do:40.1 (*)
4	867704	silentblock for TCA	31 277 899	di:20.2 do:53 (*)	8	67061	stabiliser link rear axle	31 201 603	L:140

Copyright 2021

VOLVO
XC90

XC90 II 09/2014 ->

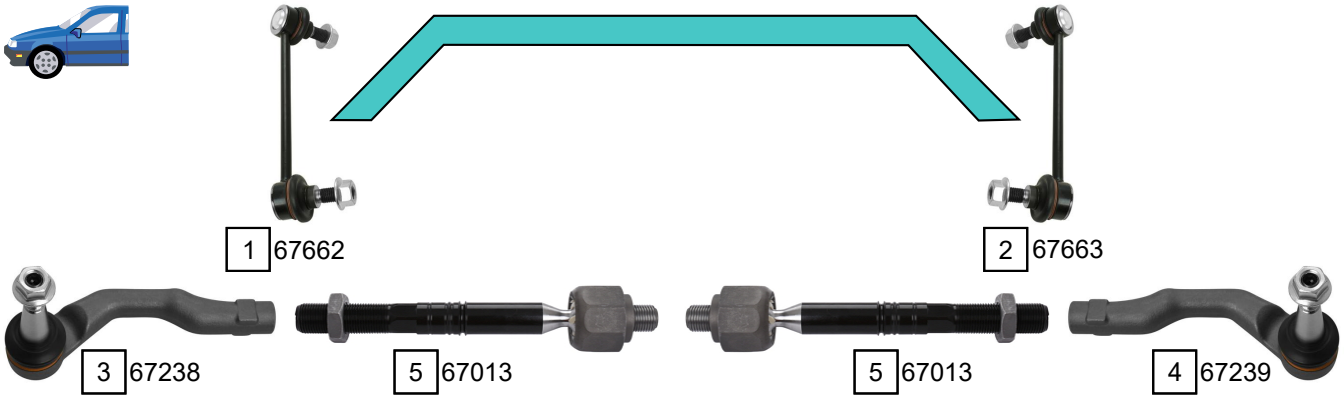

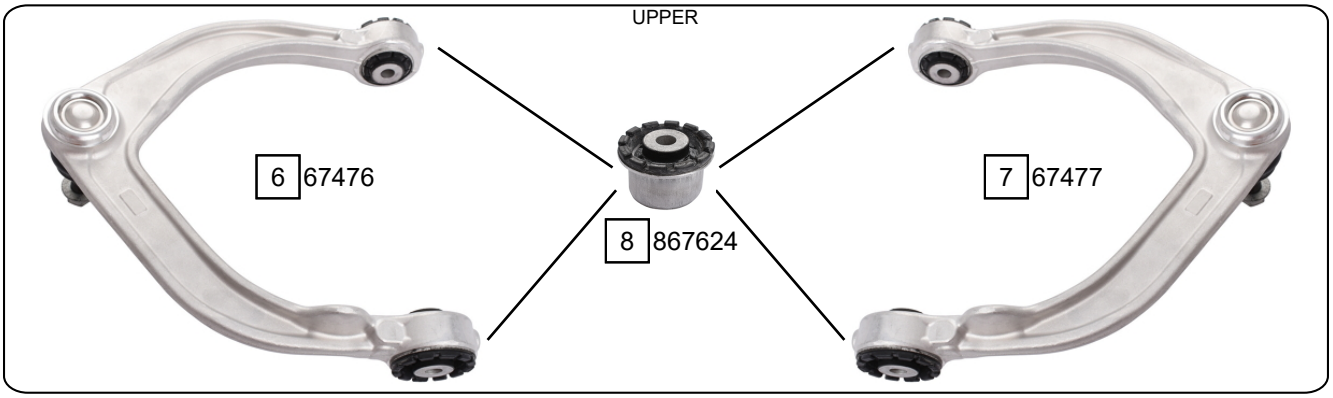

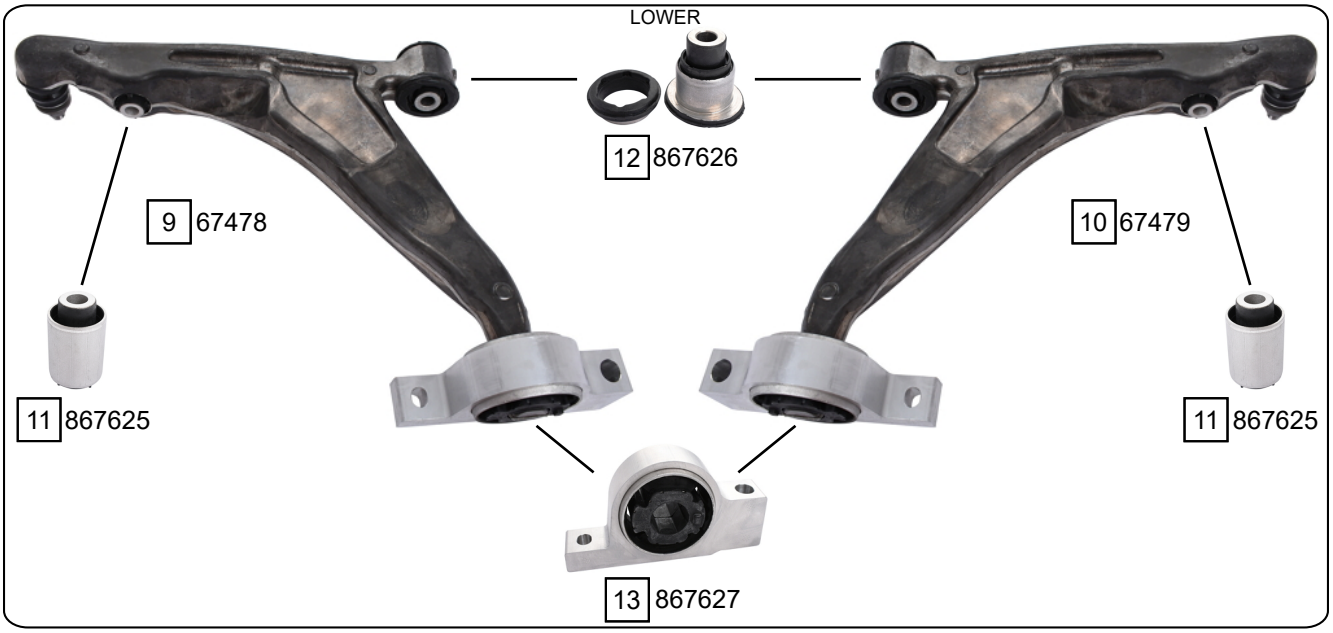

Ref.	Sidem Ref.	Description	OE-number	Measures	Ref.	Sidem Ref.	Description	OE-number	Measures
1	67662	stabiliser link left	31 406 873	L:180	8	867624	silentblock for TCA	Part of	di:10 do:40 (*)
2	67663	stabiliser link right	31 406 874	L:180	9	67478	TCA left wbj	31 360 644	c:19.3
3	67238	tie rod end left	31 476 415	c:13.6 th:FM18X1.5R	10	67479	TCA right wbj	31 360 651	c:19.3
4	67239	tie rod end right	31 476 416	c:13.6 th:FM18X1.5R	11	867625	silentblock for TCA	31 360 646	di:14.1 do:40.1 (*)
5	67013	axial joint	Part of	th:MM16X1.5R L:192	12	867626	silentblock for TCA	31 451 003	di:14.1 do:44.1 (*)
6	67476	TCA left wbj	31 360 630	c:13.8	13	867627	silentblock for TCA	31 451 032	di:27 do:79.5 (*)
7	67477	TCA right wbj	31 360 633	c:13.8	14	867630 KIT	silentblock kit	31 451 032 S1	

Copyright 2021

XC90 II 09/2014 ->

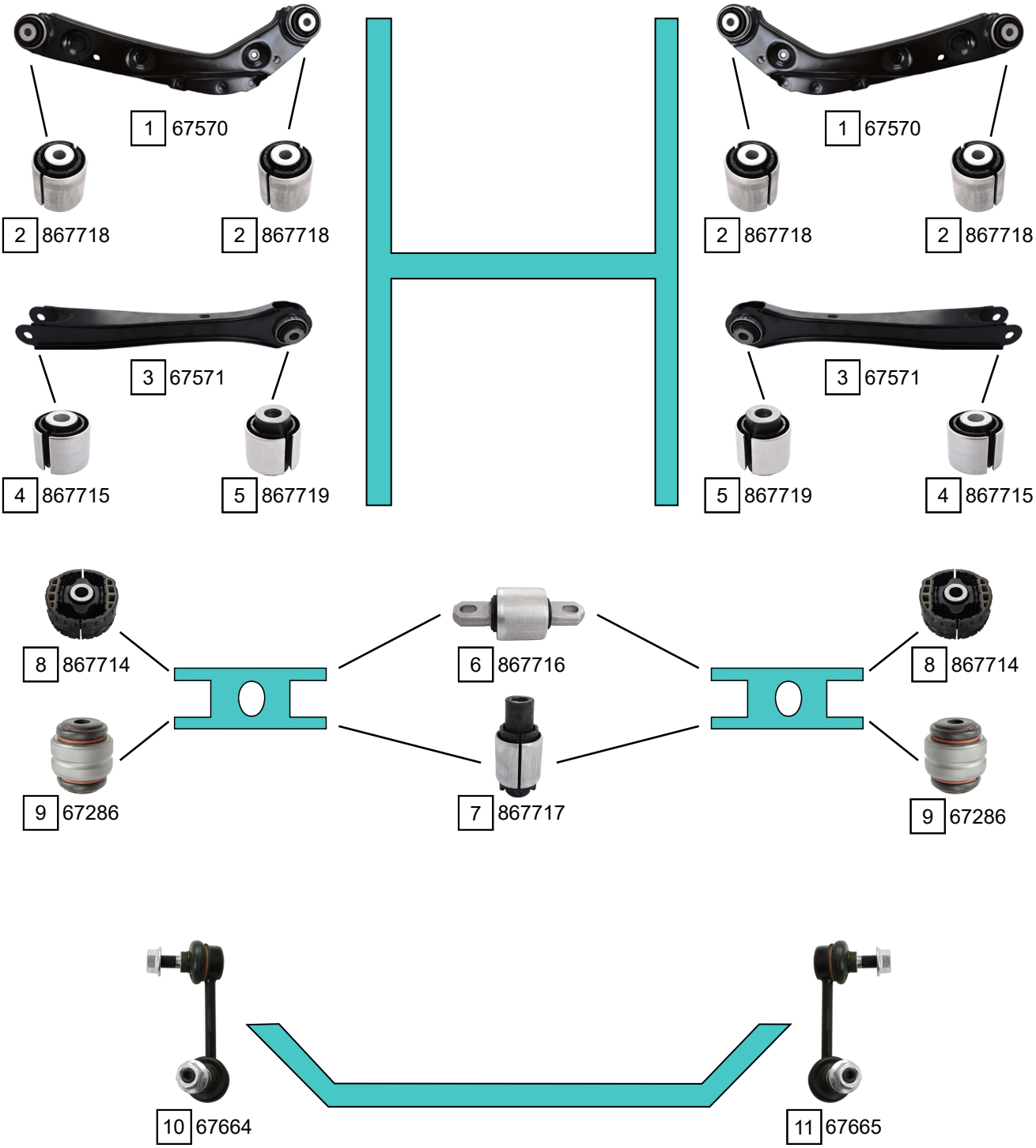

Ref.	Sidem Ref.	Description	OE-number	Measures	Ref.	Sidem Ref.	Description	OE-number	Measures
1	67570	track rod	31 360 584	L:365	7	867717	silentblock for TCA	31 360 582	di:14.3 do:43.6 (*)
2	867718	silentblock for TCA	Part of	di:10.3 do:44 (*)	8	867714	silentblock for TCA	31 360 595	di:14.1 do:77 (*)
3	67571	track rod	31 360 588	L:350	9	67286	ball joint rear	31 360 583	di:12.1 do:47.1
4	867715	silentblock for TCA	31 360 590	di:14.1 do:42 (*)	10	67664	stabiliser link left	31 387 674	L:100
5	867719	silentblock for TCA	Part of	di:12.3 do:40 (*)	11	67665	stabiliser link right	31 387 675	L:100
6	867716	silentblock for TCA	31 360 581	do:60.4 (*)					

Copyright 2021